DocuSign Envelope ID: 0F035A2F-A524-4261-8D21-CCCC4EFAF04A

5/14/99

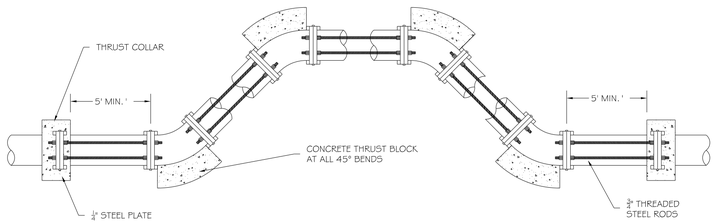

ROD REQUIREMENTS

SIZE OF 45 DEG. BEND	STATIC THRUST IN POUNDS	NUMBER OF RODS REQUIRED
6"	4,328	2
8"	7,694	2
12"	17,312	2
16"	30,779	4
20"	48,091	6
24"	69,252	8

NOTES:
1. ONCE INSTALLED AND TIGHTENED, THE STEEL RODS AND BOLTS SHALL BE COATED WITH TWO (2) COATS OF BITUMINOUS BASE PAINT.
2. CONCRETE SHALL NOT CONTACT BOLTS OR ENDS OF MECHANICAL JOINT BENDS.

VERTICAL BEND RESTRAINT DETAIL

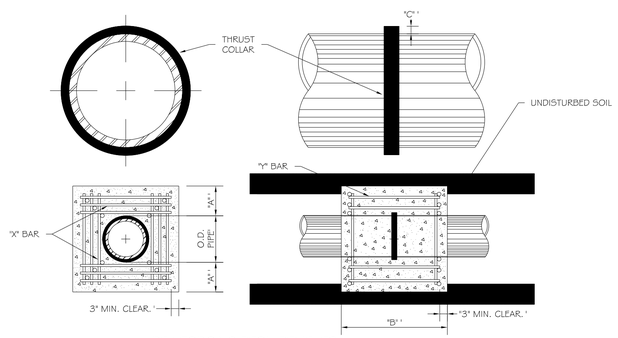

REINFORCING REQUIREMENTS

REINFORCING BAR SCHEDULE

I.D. PIPE	REBAR SIZE	"X" BAR LENGTH	"X" BAR WEIGHT	"Y" BAR LENGTH	"Y" BAR WEIGHT	NO. REQD.
6"-36"	#5	2'-2"+O.D. PIPE	1.043 LBS./FT	1'-1"	1.1 LBS. EA.	X-24,Y-12
48"	#6	3'-0"+O.D. PIPE	1.502 LBS./FT	1'-3"	1.9 LBS. EA.	X-24,Y-12

REINFORCING BAR SCHEDULE

I.D. PIPE	"A"	"B"	"C" - 6"-16", 20"-24", 30"-36", 48"
6"-36"	1'-4"	1'-7"	2" 3" 4" 6"
48"	1'-8"	1'-9"	

NOTES:
1. CONCRETE SHALL BE 2,500 P.S.I.
2. REINFORCING BARS SHALL BE DEFORMED AND TIED TOGETHER.
3. TRENCH BOTTOM WIDTH IN VICINITY OF THRUST BLOCK(S) INSTALLATION SHALL BE MINIMUM WIDTH.
4. BACKFILL SHALL BE TAMPED IN 6" LIFTS.

THRUST COLLAR FOR WATER LINES

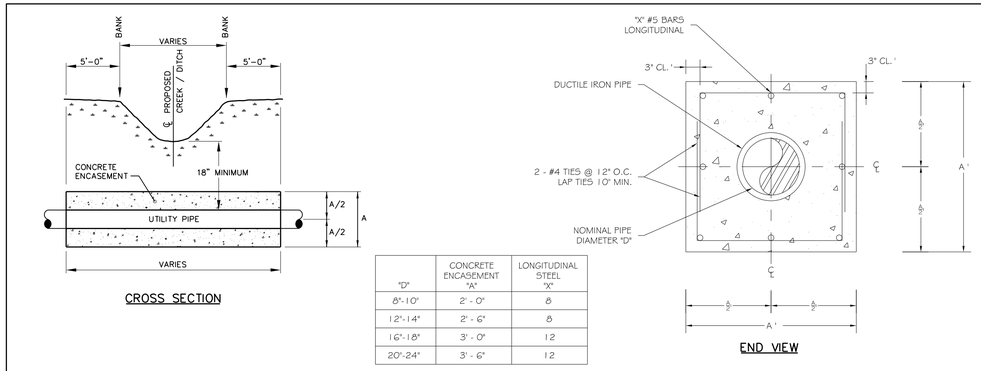

CROSS SECTION

END VIEW

"D"	CONCRETE ENCASEMENT "A"	LONGITUDINAL STEEL "X"
8"-10"	2' - 0"	8
12"-14"	2' - 6"	8
16"-18"	3' - 0"	12
20"-24"	3' - 6"	12

NOTES:
1. CONCRETE SHALL BE CLASS A – 3,000 P.S.I. MIN. COMPRESSIVE STRENGTH.
2. CONCRETE ENCASEMENT IS NOT REQUIRED WHEN PIPE IS AT LEAST THREE (3) FEET UNDER CREEK / DITCH BOTTOM.

UTILITY PIPE CONCRETE ENCASEMENT FOR DITCH / CREEK / STREAM CROSSING

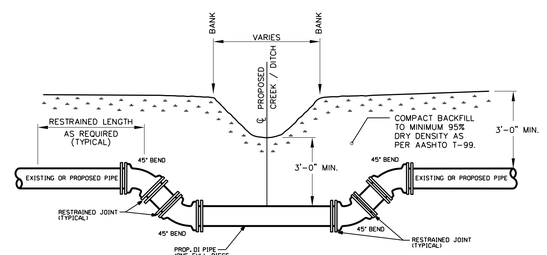

CROSS SECTION

NOTES:
1. ALL FITTINGS AND JOINTS SHALL BE RESTRAINED JOINT DESIGN OR RESTRAINT SHALL BE AS DETAILED ON VERTICAL BEND RESTRAINT DETAIL SHOWN ON THIS SHEET, AS APPROVED BY UTILITY OWNER AND/OR AS DIRECTED BY RESIDENT ENGINEER.
2. PROVIDE APPROPRIATE RESTRAINED LENGTH AS PER TABLES HEREIN.

WATER LINE AT DITCH / STREAM / CREEK CROSSING

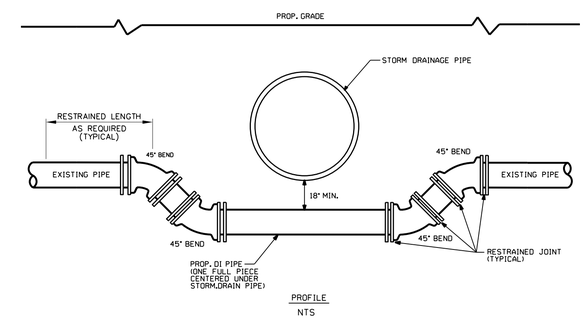

PROFILE
NTS

NOTES:
1. ALL FITTINGS AND JOINTS SHALL BE RESTRAINED JOINT DESIGN OR RESTRAINT SHALL BE AS DETAILED ON VERTICAL BEND RESTRAINT DETAIL SHOWN ON THIS SHEET, AS APPROVED BY UTILITY OWNER AND/OR AS DIRECTED BY RESIDENT ENGINEER.
2. PROVIDE APPROPRIATE RESTRAINED LENGTH AS PER TABLES HEREIN.

WATER MAIN CROSSING UNDER STORM DRAINAGE PIPE

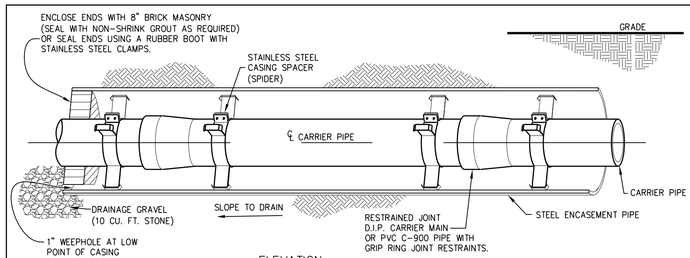

ELEVATION

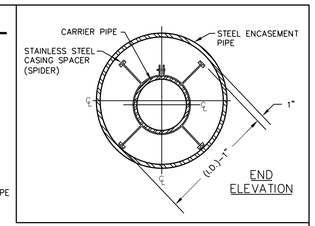

END ELEVATION

NOTES:
1. STAINLESS STEEL "SPIDERS" SHALL BE USED FOR SUPPORT OF THE CARRIER PIPE WITHIN THE STEEL ENCASEMENT PIPE. SPIDERS MANUFACTURED BY CASCADE WATERWORKS MFG. COMPANY OR APPROVED EQUAL.
2. A MINIMUM SPACING OF 2 SPIDERS PER JOINT OF CARRIER PIPE SHALL BE REQUIRED.
3. THE SPIDERS SHALL BE SPACED EVENLY ALONG THE CARRIER PIPE SUCH THAT EACH SPIDER SUPPORTS THE SAME UNIT WEIGHT OF THE CARRIER MAIN.
4. REFER TO PLAN SHEETS AND PROFILE SHEETS FOR LENGTH AND DIAMETER OF PROPOSED STEEL ENCASEMENT PIPES FOR EACH CROSSING.
5. STEEL ENCASEMENT PIPES SHALL EXTEND A MINIMUM OF 3 FEET BEHIND THE BACK OF CURB OR AS SHOWN ON THE PLANS IN ACCORDANCE WITH THE NOTED SIZE AND LENGTH.
6. THE INSIDE DIAMETER OF THE ENCASEMENT PIPE SHALL BE AT LEAST 2 INCHES GREATER THAN THE LARGEST OUTSIDE DIAMETER OF THE CARRIER PIPE JOINTS OR COUPLINGS FOR CARRIER PIPE LESS THAN 6 INCHES IN DIAMETER; AND AT LEAST 4 INCHES GREATER FOR CARRIER PIPE 6 INCHES AND LARGER IN DIAMETER.
7. FOR EXISTING UTILITY PIPE INSTALLATIONS, THE STEEL ENCASEMENT PIPE SHALL BE A SPLIT STEEL ENCASEMENT PIPE MADE UP OF TWO (2) SEMI-CIRCULAR SECTIONS JOINED BY A CONTINUOUS WELD FROM ONE END TO THE OTHER WITHOUT ANY TRACEABLE VOIDS. JOINTS BETWEEN HORIZONTAL SECTIONS OF ENCASEMENT PIPE SHALL BE FULLY WELDED AROUND THE COMPLETE CIRCUMFERENCE OF THE PIPE.
8. STEEL ENCASEMENT PIPES SHALL HAVE A SPECIFIED MINIMUM YIELD STRENGTH OF AT LEAST 35,000 PSI.
9. UNCOATED AND UNPROTECTED STEEL ENCASEMENT PIPE SHALL HAVE A MINIMUM WALL THICKNESS AS NOTED BELOW:
   0.250 INCHES FOR ENCASEMENT PIPE 10" DIA. AND SMALLER
   0.250 INCHES FOR 12" DIA. ENCASEMENT PIPE
   0.312 INCHES FOR 18" DIA. ENCASEMENT PIPE
   0.344 INCHES FOR 20" DIA. AND 22" DIA. ENCASEMENT PIPE
   0.406 INCHES FOR 26" DIA. ENCASEMENT PIPE
   0.812 INCHES FOR 56" DIA. ENCASEMENT PIPE

STEEL ENCASEMENT PIPE UNDER ROADWAY

PROJECT REFERENCE NO.	SHEET NO.
U-3621A	UC-3D

DESIGNED BY: GJB
DRAWN BY: GJB
CHECKED BY: KCZ
APPROVED BY: KCZ
REVISED:

NORTH CAROLINA DEPARTMENT OF TRANSPORTATION
UTILITIES ENGINEERING SEC.
PHONE:(919)707-6690
FAX:(919)250-4151

NORTH CAROLINA PROFESSIONAL SEAL 022661 ENGINEER KEVIN C. ZOEB
Documented by: Kevin C. Zoeb
(919)850-4151
2/22/2017

UTILITY CONSTRUCTION PLANS ONLY

UTILITY CONSTRUCTION

DOCUMENT NOT CONSIDERED FINAL UNTIL ALL SIGNATURES ARE COMPLETED

M A Engineering Consultants, Inc.
598 East Chatham Street - Suite 137
Cary, NC 27511
Phone: 919.297.0220 Fax: 919.297.0221
NC License: F-0160

DocuSign Envelope Id: 0F035A2F-A524-4261-8D21-CCCC4EFAF04A