DocuSign Envelope ID: 2A346D9A-6DBD-4213-90D2-15F7C6846D92

PROJECT REFERENCE NO.	SHEET NO.
R-5516	2C-4

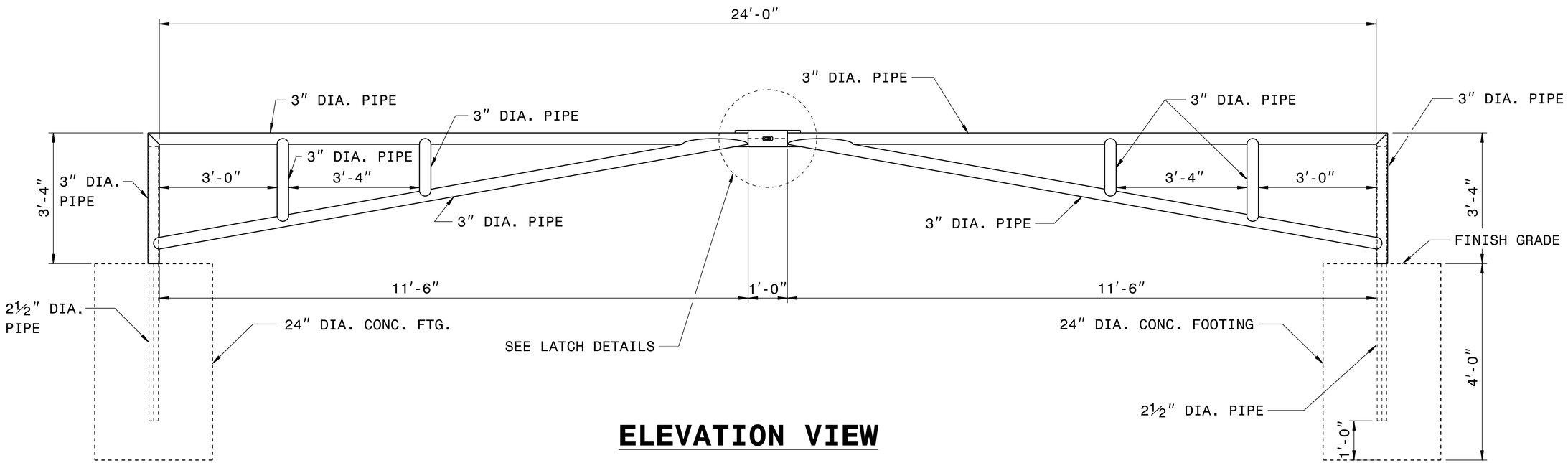

ELEVATION VIEW

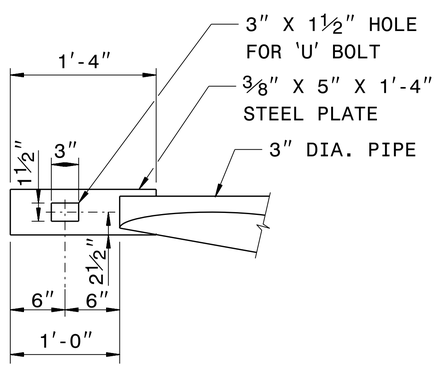

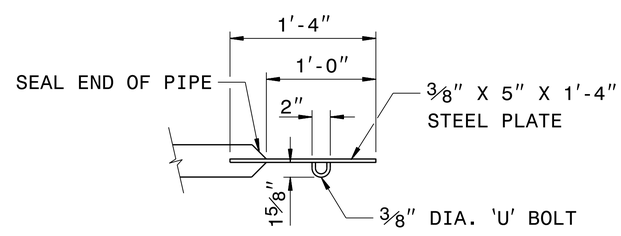

LATCH DETAILS

GENERAL NOTES:
1- USE ASTM A36 STEEL.
2- ¼" FILLET WELDS ON ALL CONNECTIONS.
3- USE CLASS 'B' CONCRETE.
4- LOCATE GATE AS DIRECTED BY THE ENGINEER.
5- ALL PIPE SIZES ARE O.D.
6- LUBRICATE 2½" DIA. PIPE BEFORE INSTALLING GATE TO INSURE SMOOTH OPERATION.

NORTH CAROLINA PROFESSIONAL SEAL 022966 ENGINEER Joel S. Howerton

DocuSigned by: Joel S. Howerton
B7B4D17E3CDC4C0...

5/15/2017

DOCUMENT NOT CONSIDERED FINAL UNLESS ALL SIGNATURES COMPLETED

CONTRACT STANDARDS & DEVELOPMENT UNIT
STANDARDS AND SPECIAL DESIGN
Office 919-707-6950 FAX 919-250-4119

DETAIL OF STEEL PIPE GATE

ORIGINAL BY: _____ DATE: _____
MODIFIED BY: rnbritt DATE: 09-08-05
CHECKED BY: _____ DATE: _____
FILE SPEC.: details/nbritt/misc/steelpipegate.dgn

10-MAY-2017 14:46
S:\Contracts\Contracts\Special Details\nbritt\english\misc\steel pipe gate.dgn
jhowerton AT CSD-292595