DocuSign Envelope ID: 0478A425-7732-4086-911E-7DFB65CADB42

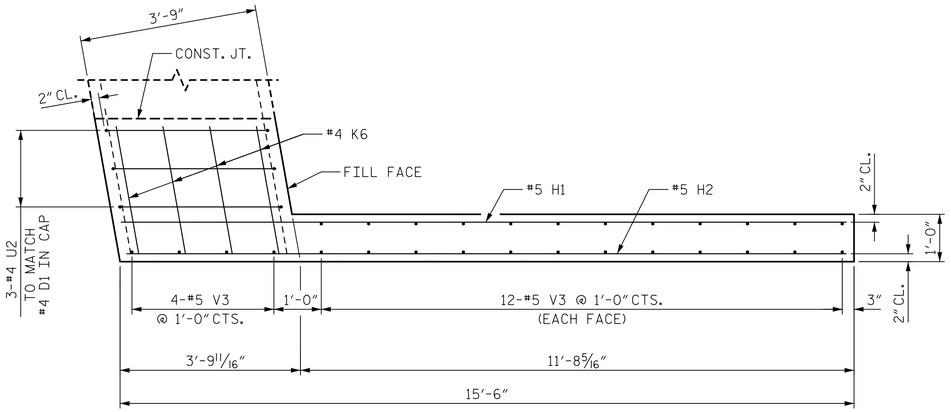

PLAN - TOP OF WING (W3)

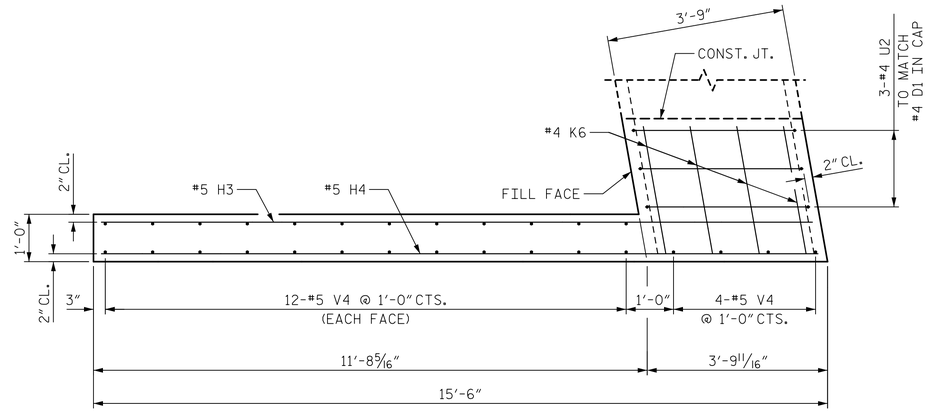

PLAN - TOP OF WING (W4)

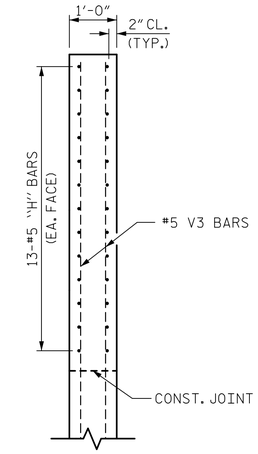

SECTION X-X

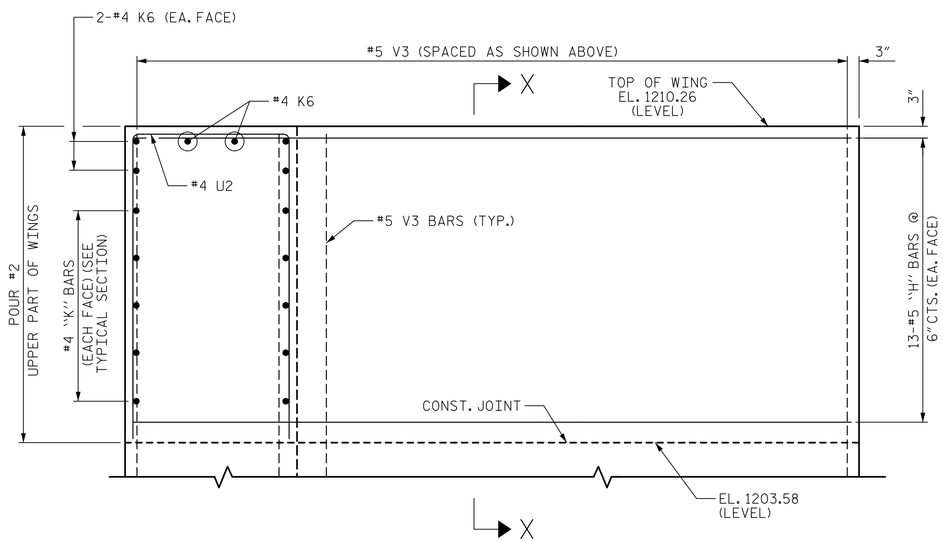

ELEVATION - TOP OF WING (W3)

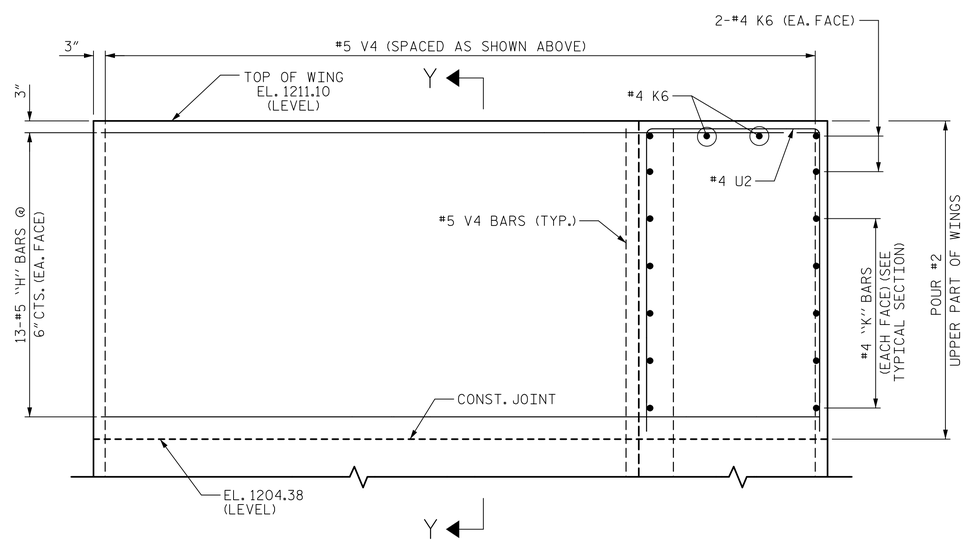

ELEVATION - TOP OF WING (W4)

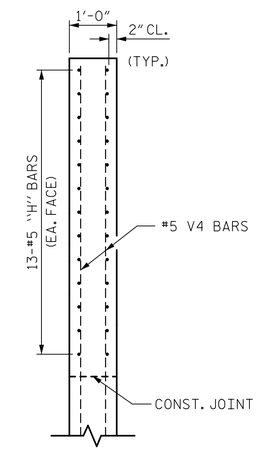

SECTION Y-Y

PROJECT NO. B-4447

BURKE COUNTY

STATION: 25+85.40 -L-
15+67.23 -Y-

SHEET 3 OF 4

NOTES:

THE UPPER PART OF THE WINGS (POUR #2) SHALL BE POURED AFTER THE SUPERSTRUCTURE.

DRAWN BY :	T.J. KIRSCHBAUM	DATE :	2/2/16
CHECKED BY :	R.F. WERTMAN	DATE :	4/6/16
DESIGN ENGINEER OF RECORD :	R.F. WERTMAN	DATE :	4/6/16

PLANS PREPARED BY:

Gannett Fleming
Excellence Delivered As Promised

2610 Wycliff Road
Suite 102
Raleigh NC 27607-3073
(919) 420-7660
NC Lic. No. F-0270

DOCUMENT NOT CONSIDERED FINAL UNLESS ALL SIGNATURES COMPLETED

NORTH CAROLINA PROFESSIONAL SEAL 037180 ENGINEER RICHARD F. WERTMAN

DocuSigned by:
08901A8EEBF6470...
7/12/2016

STATE OF NORTH CAROLINA
DEPARTMENT OF TRANSPORTATION
RALEIGH

SUBSTRUCTURE

INTEGRAL
END BENT #2

EASTBOUND LANE

REVISIONS						
NO.	BY:	DATE:	NO.	BY:	DATE:	
1			3			
2			4			

SHEET NO. S02-23

TOTAL SHEETS 28

STR. NO. 2