DocuSign Envelope ID: 30DA7951-109D-44F6-A7D8-934E40EF7F7D

NOTES:

FOR NOTES, SEE "TYPICAL SECTION", SHEET 1 OF 2.

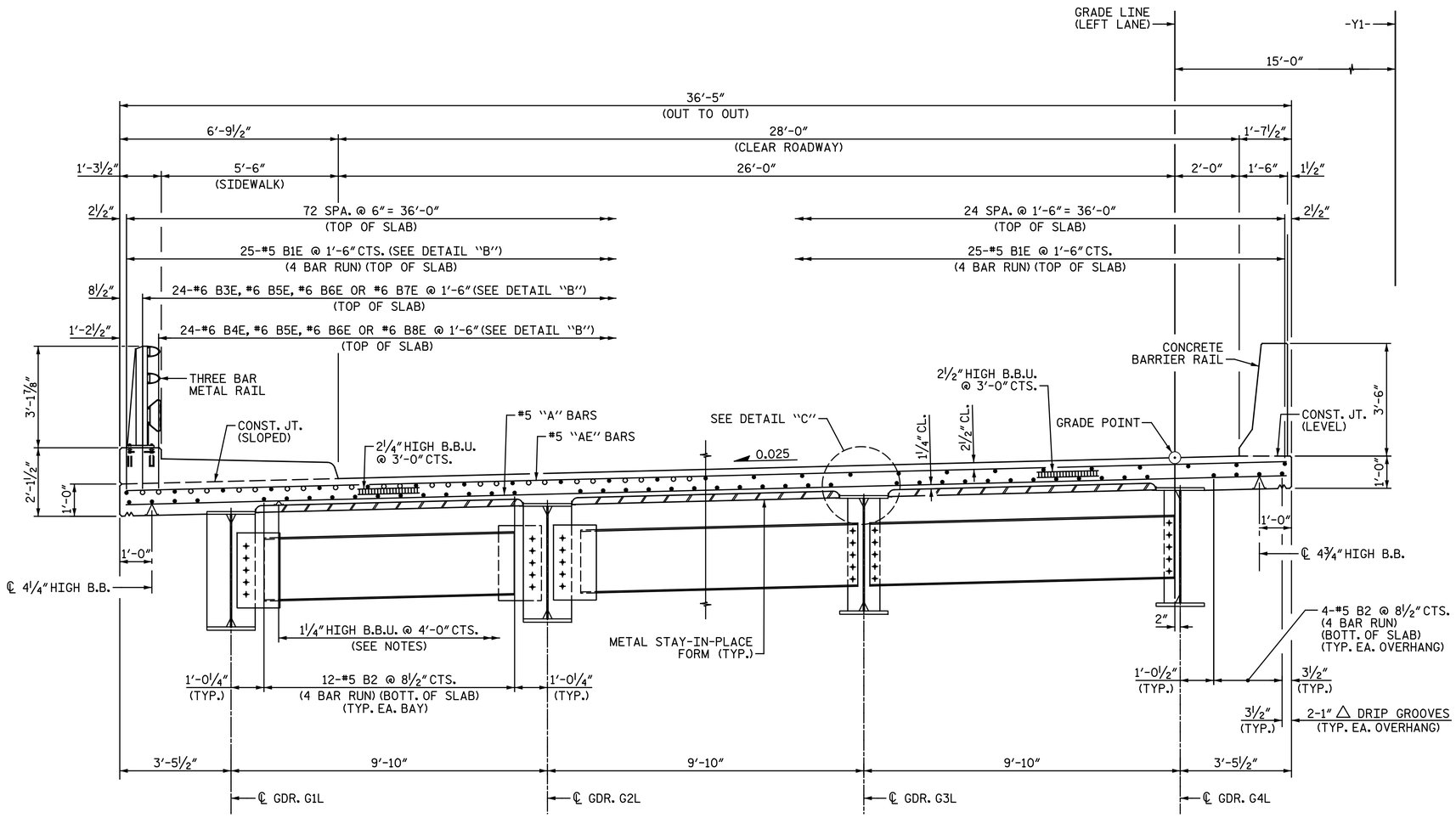

PARTIAL SECTION AT BENT DIAPHRAGM
(AREAS WITH ADDITIONAL LONGITUDINAL REINFORCEMENT)
(SEE PLAN OF SPAN FOR LOCATIONS)

PARTIAL SECTION AT INTERMEDIATE DIAPHRAGM
(AREAS WITHOUT ADDITIONAL LONGITUDINAL REINFORCEMENT)
(SEE PLAN OF SPAN FOR LOCATIONS)

TYPICAL SECTION

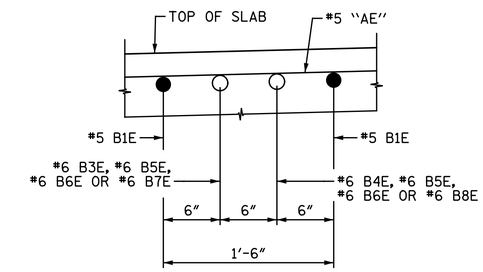

DETAIL "B"

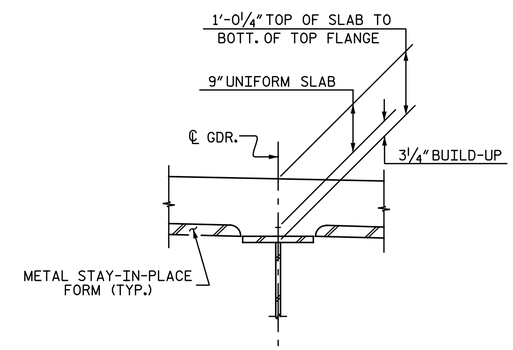

DETAIL "C"

PROJECT NO. U-3330
NASH COUNTY
STATION: 18+22.61 -Y1-

SHEET 2 OF 2

DOCUMENT NOT CONSIDERED FINAL UNLESS ALL SIGNATURES COMPLETED

NORTH CAROLINA PROFESSIONAL SEAL 042399 ENGINEER BRADLEY J. BELL

DocuSigned by: Bradley J. Bell
C41A3FBECA3C434...
1/27/2017

Michael Baker INTERNATIONAL
Michael Baker Engineering
8000 Regency Parkway, Suite 600
Cary, North Carolina 27518
NC License No.: F-1084

STATE OF NORTH CAROLINA
DEPARTMENT OF TRANSPORTATION
RALEIGH
SUPERSTRUCTURE

TYPICAL SECTION

LEFT LANES

REVISIONS						SHEET NO.
NO.	BY:	DATE:	NO.	BY:	DATE:	SI-6
1			3			TOTAL SHEETS
2			4			38

DRAWN BY: CEM / MDM DATE: 3-15-16
CHECKED BY: B. J. BELL DATE: 9-8-16