DocuSign Envelope ID: AB728DE0-A26B-4FF4-B155-10B4121E2755

5/14/99

PROJECT REFERENCE NO.	SHEET NO.
U-3330	UC-3E
DESIGNED BY: GJB	
DRAWN BY: GJB	
CHECKED BY: KCZ	
APPROVED BY: KCZ	
REVISED:	
NORTH CAROLINA DEPARTMENT OF TRANSPORTATION	
UTILITIES ENGINEERING SEC. PHONE:(919)707-6690 FAX:(919)250-4151	UTILITY CONSTRUCTION PLANS ONLY

NORTH CAROLINA PROFESSIONAL SEAL 027661 ENGINEER KEVIN C. ZOEB

Docusigned by: Kevin C. Zoeb
FF185C5C4E2E4D0...
2/22/2017

UTILITY CONSTRUCTION

DOCUMENT NOT CONSIDERED FINAL UNTIL ALL SIGNATURES ARE COMPLETED

M A Engineering Consultants, Inc.
598 East Chatham Street - Suite 137
Cary, NC 27511
Phone: 919.297.0220 Fax: 919.297.0221
NC License: F-0160

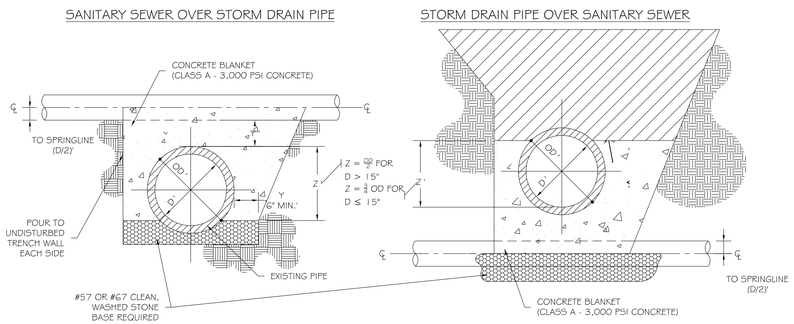

NOTES:
1. CONCRETE BLANKET IS REQUIRED WHEN THE CLEARANCE BETWEEN THE TOP OF THE LOWER PIPE AND THE BOTTOM OF THE UPPER PIPE IS LESS THAN 12".
2. "Y" = D/6 (6" MIN.) WHERE THE CLEARANCE BETWEEN THE TOP OF THE LOWER PIPE AND THE BOTTOM OF THE UPPER PIPE IS LESS THAN "Y". THE CONCRETE SHALL BE PLACED BETWEEN THE PIPES AND AROUND THE SIDES OF THE UPPER PIPE UP TO A LEVEL EQUAL TO THE SPRINGLINE OF THE UPPER PIPE.
3. WHENEVER A PIPE BELL IS ENCOUNTERED WITHIN THE LIMITS OF THE CONCRETE BLANKET, ALL DIMENSIONS SHALL REFER TO THE BELL OF THE PIPE.

CONCRETE BLANKET FOR CROSSING SANITARY SEWER PIPES

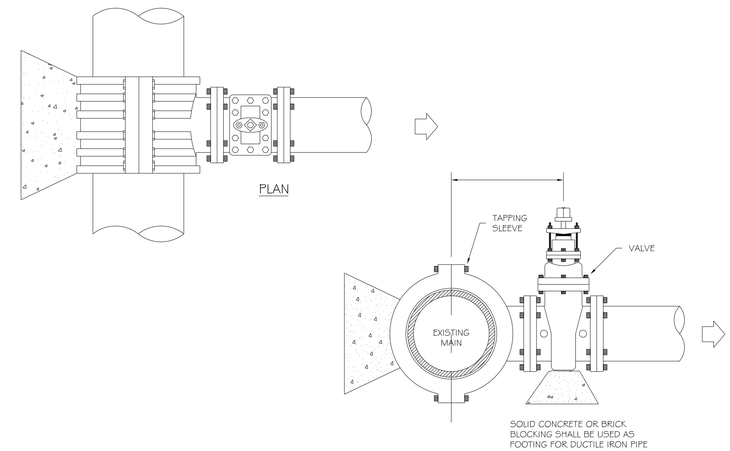

NOTES:
1. CONCRETE SHALL NOT CONTACT BOLTS OR ENDS OF THE MECHANICAL JOINT FITTINGS.
2. REFER TO THRUST BLOCK DETAILS.
3. 2,500 P.S.I. CLASS B CONCRETE REQUIRED.
4. TAPPING SLEEVE AND VALVE SHALL BE BOLTED IN PLACE AND PRESURE TESTED PRIOR TO TAPPING OF EXISTING WATER MAIN.

TAPPING SLEEVE AND VALVE ASSEMBLY

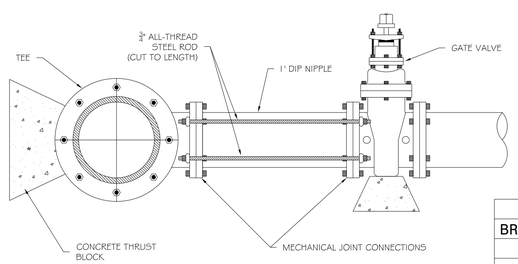

ROD REQUIREMENTS	
BRANCH SIZE	# OF RODS
4"	2 EACH
6"	2 EACH
8"	2 EACH
12"	2 EACH
16"	2 EACH
20"	4 EACH
24"	4 EACH

NOTES:
1. CONCRETE SHALL NOT CONTACT BOLTS OR ENDS OF THE MECHANICAL JOINT FITTINGS.
2. REFER TO THRUST BLOCK DETAILS.
3. 2,500 P.S.I. CLASS B CONCRETE REQUIRED.
4. ONCE INSTALLED AND TIGHTENED, THE STEEL RODS AND BOLTS SHALL BE COATED WITH TWO (2) COATS OF BITUMINOUS BASE PAINT.

RESTRAINED TEE AND VALVE FOR BRANCH LINES

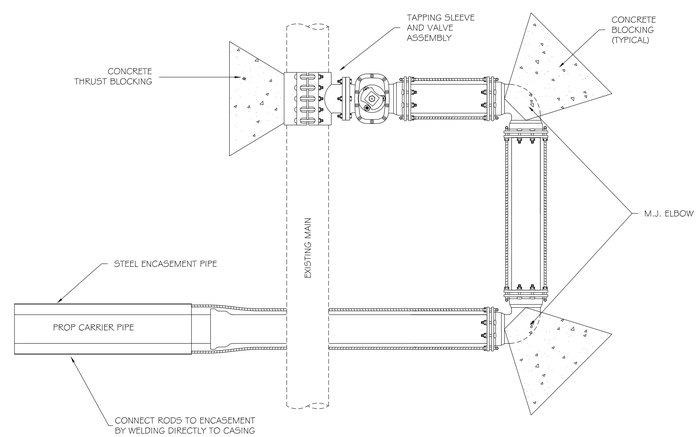

OFFSET BORE AND JACK WITH REVERSE TAP