DocuSign Envelope ID: 19EFE3E4-D9A3-46BE-857D-6AA023D99106

PROJECT REFERENCE NO.	SHEET NO.
U-3330	SCP-30

SPLICE ENCLOSURE NO.

T04-0682

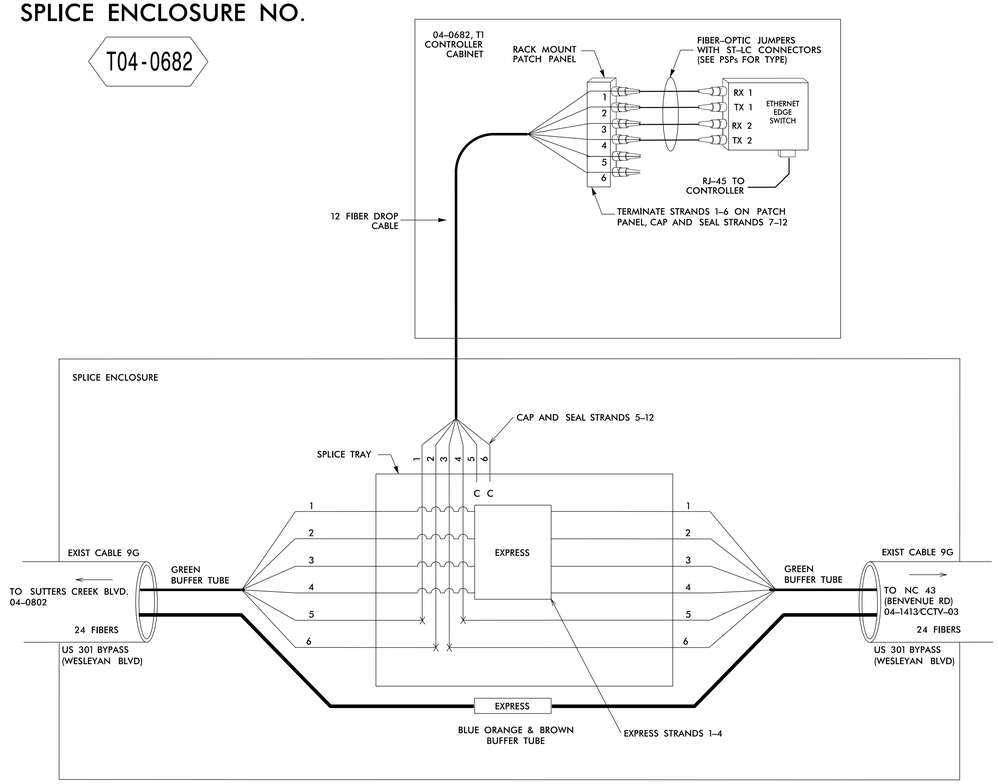

NOTE: MATCH CABLE NUMBER TO CORRESPONDING CABLE DESTINATION TO DETERMINE CORRECT DIAGRAM ORIENTATION.

TMP Area 3, Phase I

LEGEND

COLOR CODE TIA/EIA 598-B

(1) BLUE	(7) RED
(2) ORANGE	(8) BLACK
(3) GREEN	(9) YELLOW
(4) BROWN	(10) VIOLET
(5) SLATE	(11) ROSE
(6) WHITE	(12) AQUA

E = EXIST. FUSION SPLICE INDIVIDUAL FIBER

X = FUSION SPLICE INDIVIDUAL FIBER

C = CAP AND SEAL

EXPRESS = EXPRESS ENTIRE BUFFER TUBE /FIBERS THROUGH WITHOUT CUTTING

BUFFER SPLICE = SPLICE ALL FIBERS IN BUFFER TUBE COLOR TO COLOR

NOTES

1. UNUSED FIBERS LEFT COILED AND STORED IN SPLICE TRAY.
2. UNUSED BUFFER TUBES LEFT COILED AND STORED IN SPLICE ENCLOSURE.
3. EDGE SWITCH CONFIGURATIONS ARE GENERIC. CONTRACTOR IS RESPONSIBLE FOR DETERMINING/ENSURING THE PROPER TERMINATIONS.
4. TWO (2) WEEKS PRIOR TO BEGINNING WORK ON THE SIGNAL SYSTEM, CONTACT THE CITY OF ROCKY MOUNT SENIOR SIGNAL SYSTEM OPERATOR, MICHAEL WEBB, AT 252-972-1132 TO ARRANGE FOR THE CITY OF ROCKY MOUNT TO PROGRAM THE NEW FIELD ETHERNET SWITCHES WITH THE NECESSARY NETWORK CONFIGURATION DATA, INCLUDING BUT NOT LIMITED TO: THE PROJECT IP ADDRESS, DEFAULT GATEWAY, SUBNET MASK AND VLAN ID INFORMATION. NOTIFY THE SENIOR SIGNAL SYSTEM OPERATOR AFTER ALL WORK IS PERFORMED TO ENSURE THAT ALL FIBER CIRCUITS ARE FUNCTIONING PROPERLY. WORK IS NOT COMPLETE UNTIL THE SIGNAL SYSTEM IS BACK UP AND OPERATIONAL.
5. CONTRACTOR TO RECORD EXISTNG SPLICE ARRANGEMENT FOR COMPARISON TO THE SUPPLIED SPLICE DETAILS. IF DISCREPANCIES EXIST, CONTACT THE ENGINEER TO DETERMINE HOW TO PROCEED WITH RESPLICING. PROVIDE AS-BUILT PLANS TO THE ENGINEER IF FINAL SPLICE ARRANGED DIFFERS FROM THE SUPPLIED SPLICE DETAILS.
6. INCLUDE ON THE COVER OF EACH SPLICE TRAY THE FOLLOWING INFORMATION (SEE STANDARD SPECIFICATIONS ARTICLE 1731-3(A)):

a. SPLICE LOCATION
b. DATE
c. COMPANY NAME
d. NAME OF INDIVIDUAL PERFORMING THE SPLICE

PRIOR TO INSTALLING THE COVER ON THE SPLICE TRAY, TAKE A DIGITAL PHOTOGRAPH SHOWING THE SPLICE TRAY AND INFORMATION SHOWN ABOVE (ITEMS A-D) AND SUBMIT PHOTOGRAPH ALONG WITH OTDR TEST RESULTS.

ATKINS
1616 EAST MILLBROOK ROAD, SUITE 160
RALEIGH, NORTH CAROLINA 27609
(919) 876-6888 NCBEES #F-0326

DOCUMENT NOT CONSIDERED FINAL UNLESS ALL SIGNATURES COMPLETED

Prepared for the Offices of:
750 Greenfield Parkway, Garner, NC 27529

US 301 Widening
Fiber Optic
Temp. Splicing Details

Division 4 Nash County Rocky Mount

PLAN DATE: November 2016 REVIEWED BY: HA Badgett
PREPARED BY: GB Spell REVIEWED BY: JT Brooks

REVISIONS	INIT.	DATE

N.T.S.

SEAL
NORTH CAROLINA PROFESSIONAL SEAL 019962 ENGINEER HENRY ALFRED BADGETT III
Digitally signed by Henry Alfred Badgett III 1/30/2017
DATE
CADD Filename: SCP-32.dgn

30-JAN-2017 15:54
G:\Transportation\Traffic\Curr\100052135 U-3330 Signals\04_Splicing\Permanent\SCP-32.dgn
sbell222 AT LUSSNO114