DocuSign Envelope ID: 5D7E52A4-3027-4020-9327-416BC4FAE2C9

PROJECT REFERENCE NO.	SHEET NO.
U-3330	Sig. 14.3

PHASING DIAGRAM

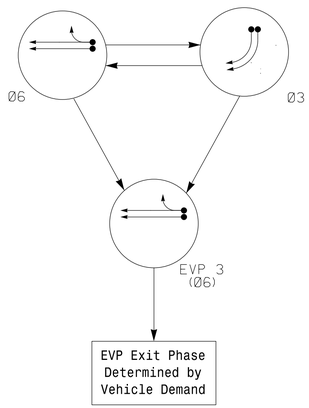

PHASING DIAGRAM DETECTION LEGEND

- DETECTED MOVEMENT
- UNDETECTED MOVEMENT (OVERLAP)
- UNSIGNALIZED MOVEMENT
- PEDESTRIAN MOVEMENT

TABLE OF OPERATION

SIGNAL FACE	PHASE Ø3	PHASE Ø6	PHASE EVP3	PHASE FLASH
31,32	→	R	R	R
61,62	R	G	G	Y

SIGNAL FACE I.D.

All Heads L.E.D.

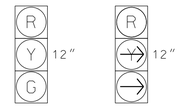

OASIS 2070 LOOP & DETECTOR INSTALLATION CHART

DETECTION ZONES					DETECTOR PROGRAMMING							
LOOP	SIZE (FT)	DISTANCE FROM STOPBAR (FT)	TURNS	NEW LOOP	PHASE	CALLING	EXTENSION	FULL TIME DELAY	STRETCH TIME	DELAY TIME	SYSTEM LOOP	NEW CARD
3A	6X40	0	✳	-	3	Y	Y	-	-	-	-	✳
3B	6X40	0	✳	-	3	Y	Y	-	-	-	-	✳
6A/S21	6X6	300	✳	-	6	Y	Y	-	-	-	Y	✳
6B/S22	6X6	300	✳	-	6	Y	Y	-	-	-	Y	✳
6C	6X40	0	✳	-	6	Y	Y	Y	2	5	-	✳
6D	6X40	0	✳	-	6	Y	Y	Y	2	5	-	✳

✳ Video Detection Area

2 Phase W/ EV Preempt
Fully Actuated
Rocky Mount Signal System

NOTES

1. Refer to "Roadway Standard Drawings NCDOT" dated January 2012 and "Standard Specifications for Roads and Structures" dated January 2012.
2. Do not program signal for late night flashing operation unless otherwise directed by the Engineer.
3. Set all loop emulators to presence mode.
4. Reposition existing signal head numbered 61 as shown.
5. This intersection features an optical preemption system. Shown locations of optical detectors are conceptual only.
6. Reuse EVP 3 detector and reuse existing Phase Selector. See Project Special Provisions.
7. Maximum times shown in timing charts are for free-run operation only. Coordinated signal timing values supersede these values.

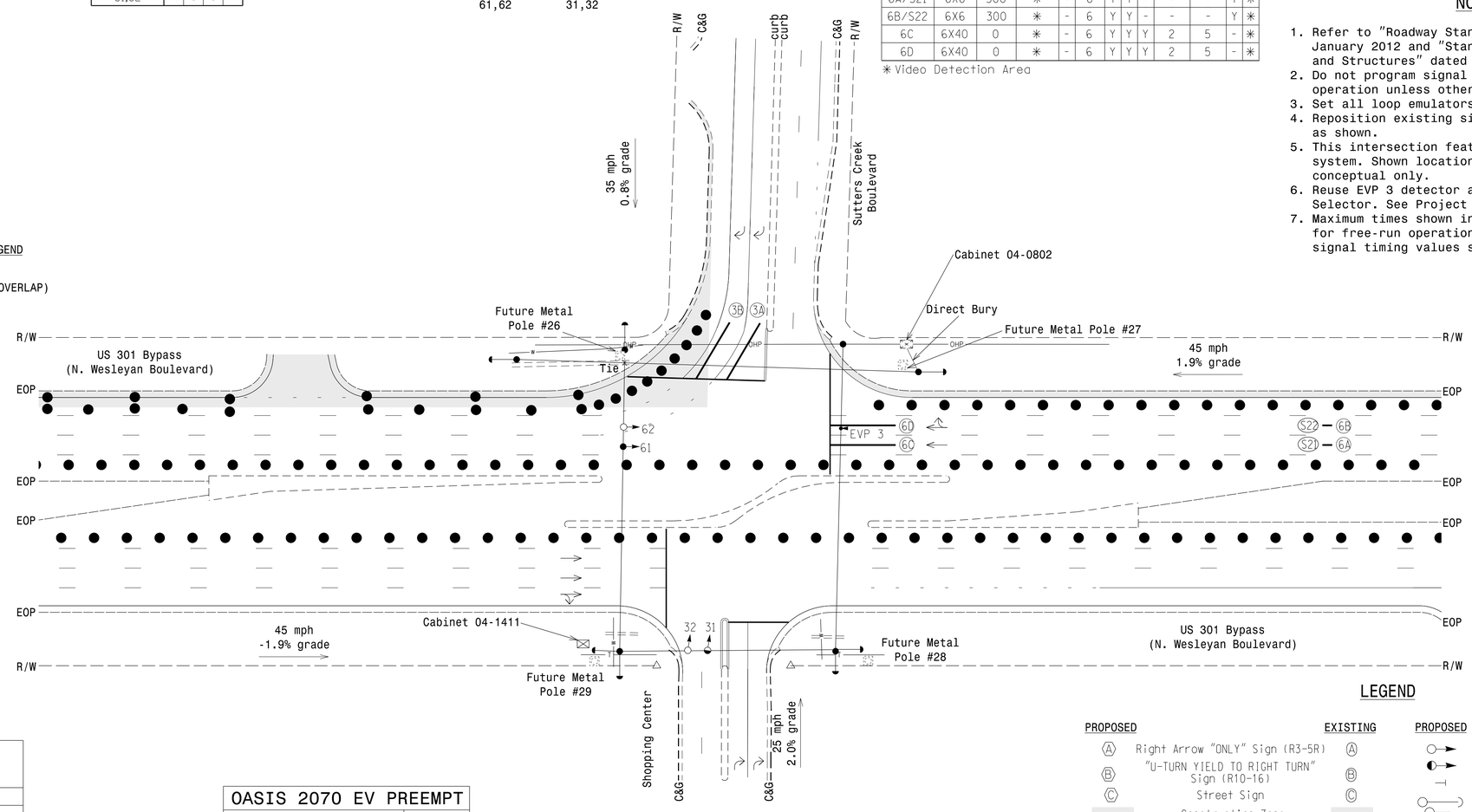

LEGEND

PROPOSED		EXISTING
Ⓐ	Right Arrow "ONLY" Sign (R3-5R)	Ⓐ
Ⓑ	"U-TURN YIELD TO RIGHT TURN" Sign (R10-16)	Ⓑ
Ⓒ	Street Sign	Ⓒ
	Construction Zone	
● ●	Construction Zone Drums	● ●
N/A	UG Water Line	—W—
N/A	Drainage Pipe	
N/A	UG Telephone Line	—T—
N/A	Overhead Power Line	—OHP—

PROPOSED		EXISTING
	Traffic Signal Head	
	Modified Signal Head	N/A
	Sign	
	Signal Pole with Guy	
	Signal Pole with Sidewalk Guy	
	Inductive Loop Detector	
	Controller & Cabinet	
	Junction Box	
	2-in Underground Conduit	
N/A	Right of Way	
	Directional Arrow	
	Emergency Vehicle Detector	

OASIS 2070E TIMING CHART

FEATURE	PHASE 3	PHASE 6
Min Green 1 *	7	12
Extension 1 *	2.0	6.0
Max Green 1 *	30	60
Yellow Clearance	3.2	4.4
Red Clearance	1.3	1.0
Red Revert	2.0	2.0
Walk 1 *	-	-
Don't Walk 1	-	-
Seconds Per Actuation *	-	-
Max Variable Initial *	-	-
Time Before Reduction *	-	15
Time To Reduce *	-	30
Minimum Gap	-	3.0
Recall Mode	-	MIN RECALL
Vehicle Call Memory	-	-
Dual Entry	-	-
Simultaneous Gap	ON	ON

* These values may be field adjusted. Do not adjust Min Green and Extension times for phases 2 and 6 lower than what is shown. Min Green for all other phases should not be lower than 4 seconds.

OASIS 2070 EV PREEMPT

FUNCTION	PRE 3
Interval 1 – Dwell Green	255
Interval 1 – Dwell Yellow	0.0*
Interval 1 – Dwell Red	0.0*
Interval 5 – Exit Green	0
Interval 5 – Yellow	0.0
Interval 5 – Red	0.0
Exit Phase(s)	-
Priority	MED
Delay Time	0.0
Min Green Before Pre	1
Ped Clear Before Pre	0
Yellow Clear Before Pre	0.0*
Red Clear Before Pre	0.0*
Dwell Min Time	12
Enable Backup Protection	N
Ped Clear Through Yellow	N
Omit Overlaps	-
Preempt Extend**	5

* Time defaults to time used for phase during normal operation
** Program Timing on Optical Detection Unit

DOCUMENT NOT CONSIDERED FINAL UNLESS ALL SIGNATURES COMPLETED

Signal Upgrade - Temporary Design 2 (Area 3 TMP Phase III)

Prepared for the Offices of:
Transportation Mobility and Safety Division
STATE OF NORTH CAROLINA DEPARTMENT OF TRANSPORTATION
Signal Design Section
750 N.Greenfield Pkwy,Garner,NC 27529

SB US 301 Byp
(N. Wesleyan Blvd)
at
Sutters Creek Blvd

Division 04 Nash County Rocky Mount

PLAN DATE: November 2016 REVIEWED BY: MB Toth
PREPARED BY: AM Encarnacion REVIEWED BY:

SCALE 0 40 1"=40'

REVISIONS	INIT.	DATE

SEAL
NORTH CAROLINA PROFESSIONAL SEAL 025892 ENGINEER MELISSA B. TOTH

Developed by: Melissa B. Toth 1/30/2017
SIGNATURE DATE

SIG. INVENTORY NO. 04-0802T2

ATKINS 1616 EAST MILLBROOK ROAD, SUITE 160
RALEIGH, NORTH CAROLINA 27609
(919) 876-6888 NCBEES #F-0326

30-JAN-2017 18:05
O:\Transportation\Traffic\Curr\100052135_U-3330_Signals\02_Signals\Design\04-0802T2.dgn
ENCA5386 AT LUS290321