NOTES

STIRRUPS IN CAP MAY BE SHIFTED AS NECESSARY TO CLEAR DOWELS.

★ INVERT ALTERNATE STIRRUPS.

FOR ADDITIONAL REINFORCING STEEL IN PP 18 x 0.50 GALVANIZED STEEL PILES, SEE SHEET 3 OF 3.

GALVANIZE THE TOP OF EACH INTERIOR BENT PILE A MINIMUM OF 60 FEET. GALVANIZE IN ACCORDANCE WITH SECTION 1076 OF THE STANDARD SPECIFICATIONS.

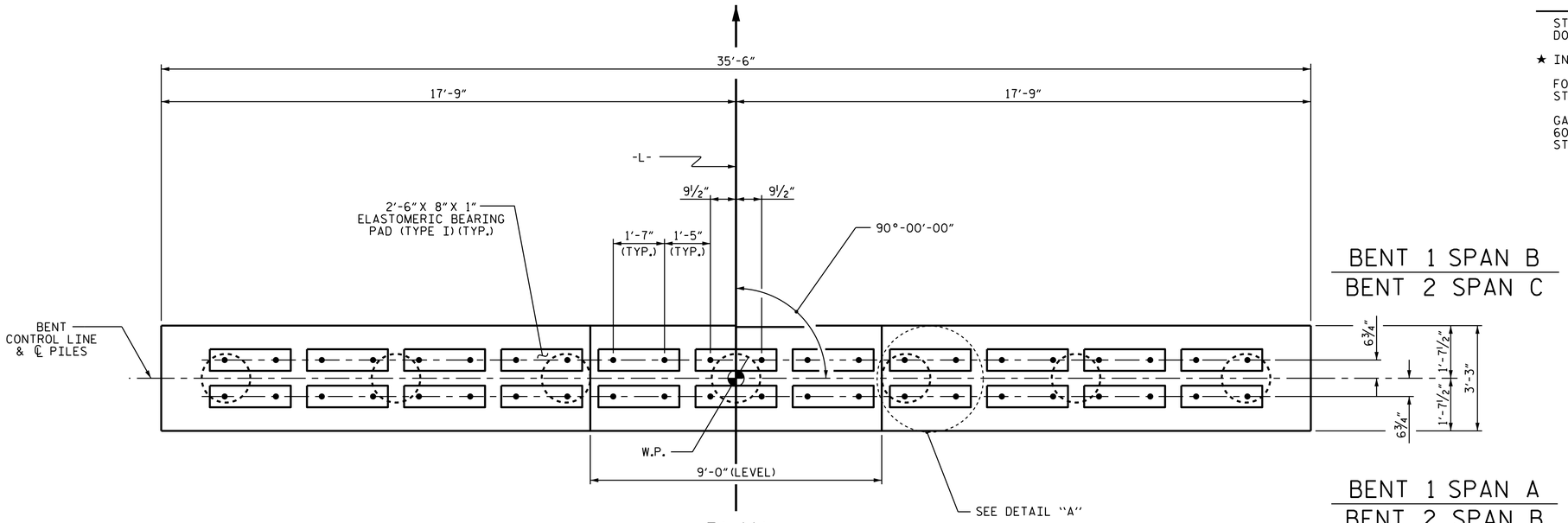

PLAN

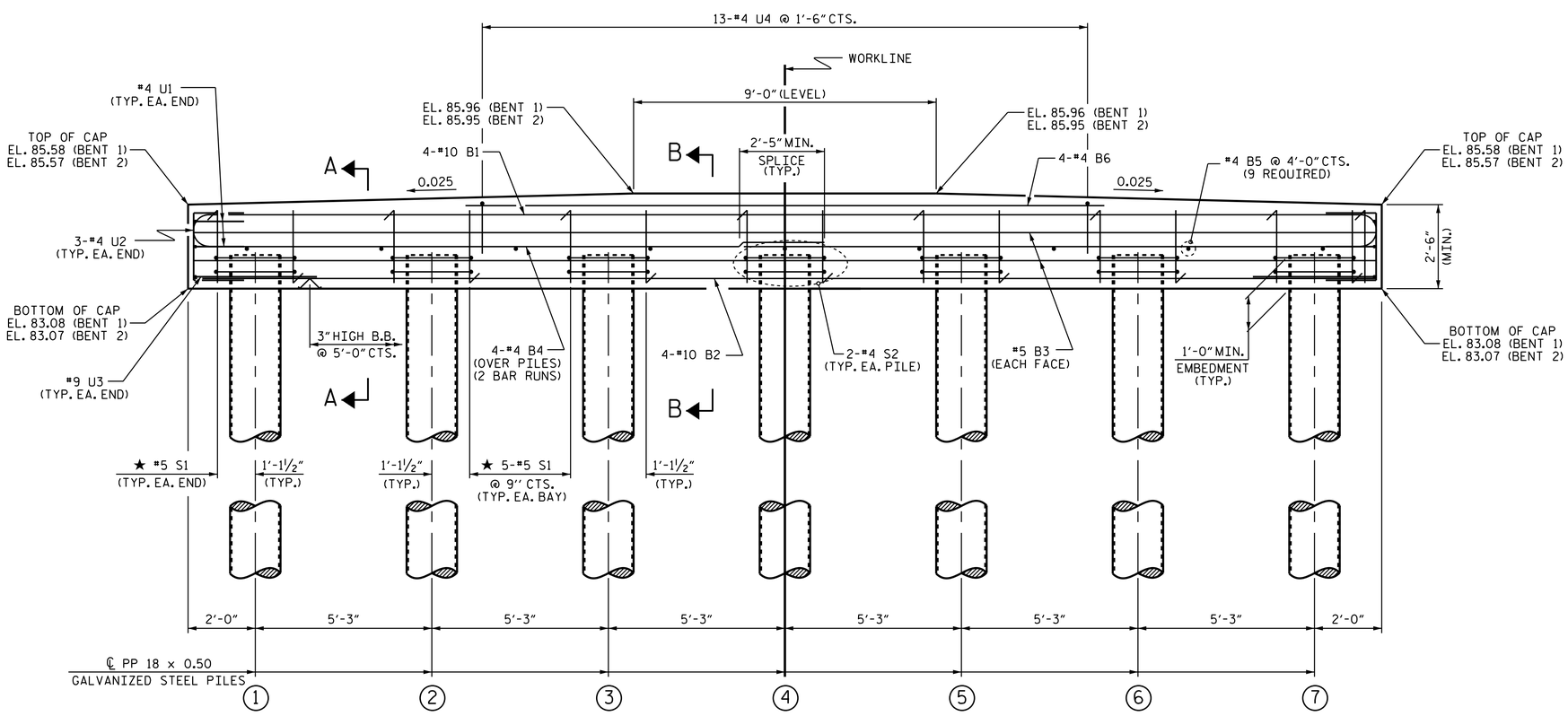

ELEVATION

FOR SECTION A-A, SEE SHEET 2 OF 3

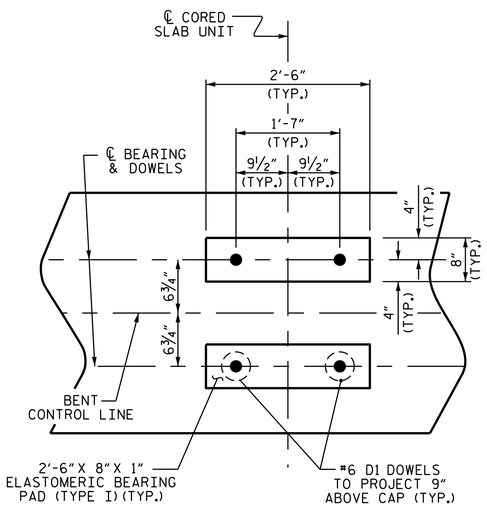

DETAIL "A"

(DIMENSIONS ARE TYPICAL EACH BEARING)

PROJECT NO. B-4771

JOHNSTON COUNTY

STATION: 16+82.00 -L-

SHEET 1 OF 3

STATE OF NORTH CAROLINA
DEPARTMENT OF TRANSPORTATION
RALEIGH

SUBSTRUCTURE

BENTS 1 & 2

NORTH CAROLINA PROFESSIONAL SEAL 26445 ENGINEER P. KOREY NEWTON

DocuSigned by: P. Korey Newton
4FFE39D1431B407...
3/15/2017

DOCUMENT NOT CONSIDERED FINAL UNLESS ALL SIGNATURES COMPLETED

REVISIONS						SHEET NO.
NO.	BY:	DATE:	NO.	BY:	DATE:	S-16
1			3			TOTAL SHEETS
2			4			20

ASSEMBLED BY : P. K. NEWTON		DATE : 11/23/16	
CHECKED BY : H. A. LOCKLEAR		DATE : 12/12/16	
DRAWN BY : DGE 06/10	REV. 11/14	MAA/TMG	
CHECKED BY : MKT 06/10			

08-MAR-2017 16:49
G:\Structures\Plans\Final Plans\B-4771_SMU_FinalPlans.dgn
pknewton