DocuSign Envelope ID: B83B00EA-BEE3-405B-901B-E762DAA7ED15

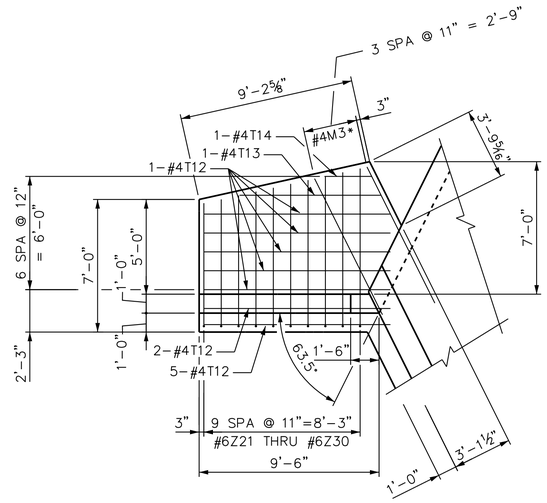

PLAN (W3)

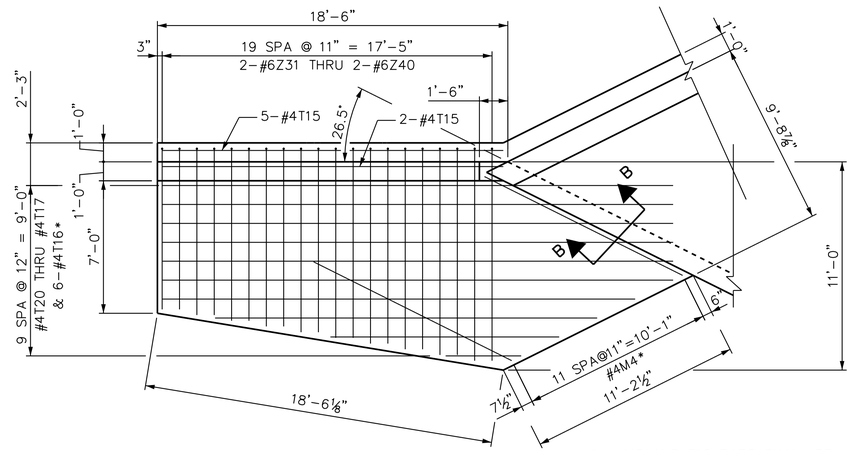

PLAN (W4)

* – M3 AND T16 BARS SHALL BE PLACED ABOVE THE BOTTOM REINFORCING MAT OF CULVERT FLOOR SLAB. FOR SECTION B–B SEE SHEET S5.

BAR TYPES

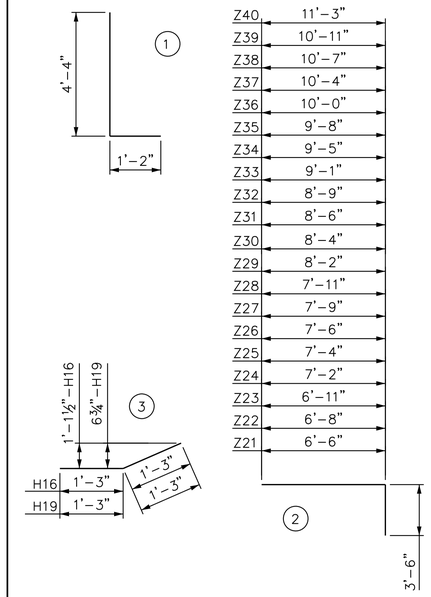

ALL BAR DIMENSIONS ARE OUT TO OUT

NOTES

SEE SHEET S1 FOR LOCATION AND NOTES.

FOR WING ORIENTATION SEE SHEET S3.

A 3 FOOT STRIP OF FILTER FABRIC SHALL BE ATTACHED TO FILL FACE OF THE WING COVERING THE ENTIRE LENGTH OF EXPANSION JOINT.

WINGS W3 AND W4 BILL OF MATERIAL

BAR	NO.	SIZE	TYPE	LENGTH	WEIGHT
H13	14	4	STR	7'-8"	72
H14	2	4	STR	6'-7"	9
H15	2	4	STR	7'-8"	10
H16	18	4	3	2'-6"	30
H17	16	4	STR	16'-8"	178
H18	2	4	STR	14'-3"	19
H19	18	4	3	2'-6"	30
M3	4	4	STR	8'-0"	21
M4	12	4	STR	11'-8"	94
N1	31	6	1	5'-6"	256
T12	12	4	STR	9'-10"	79
T13	1	4	STR	7'-5"	5
T14	1	4	STR	2'-5"	2
T15	7	4	STR	18'-0"	84
T16	6	4	STR	26'-11"	108
T17	1	4	STR	24'-11"	17
T18	1	4	STR	20'-2"	13
T19	1	4	STR	12'-1"	8
T20	1	4	STR	3'-11"	3
V41	3	6	STR	7'-0"	32
V42	3	6	STR	7'-4"	33
V43	3	6	STR	7'-8"	35
V44	2	6	STR	7'-10"	24
V45	3	4	STR	7'-0"	14
V46	3	4	STR	7'-4"	15
V47	3	4	STR	7'-8"	15
V48	2	4	STR	7'-10"	10
V49	5	6	STR	7'-0"	53
V50	5	6	STR	7'-3"	54
V51	5	6	STR	7'-6"	56
V52	3	6	STR	7'-9"	35
V53	2	6	STR	7'-10"	24
V54	5	4	STR	7'-0"	23
V55	5	4	STR	7'-3"	24
V56	5	4	STR	7'-6"	25
V57	3	4	STR	7'-9"	16
V58	2	4	STR	7'-10"	10
Z21	1 EA	6	2	10'-0"	
THRU	OF				
Z30	10	6	2	11'-10"	164
Z31	2 EA	6	2	12'-0"	
THRU	OF				
Z40	20	6	2	14'-9"	402
REINFORCING STEEL -LBS-					2101

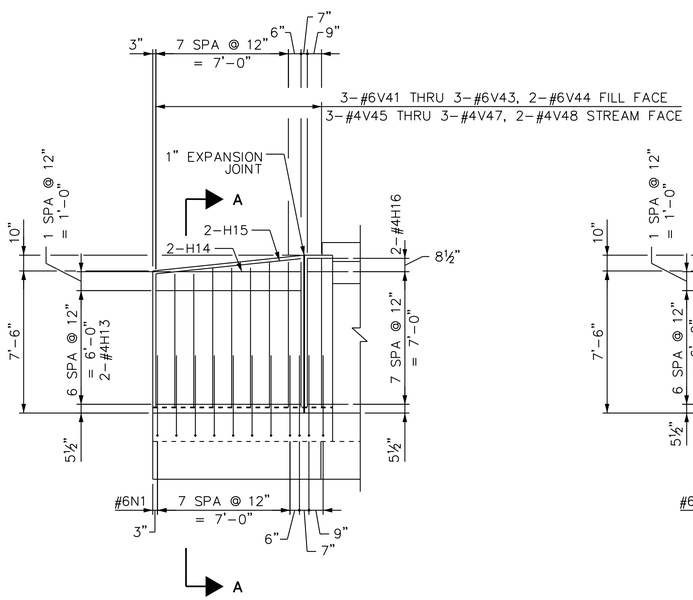

ELEVATION (W3)

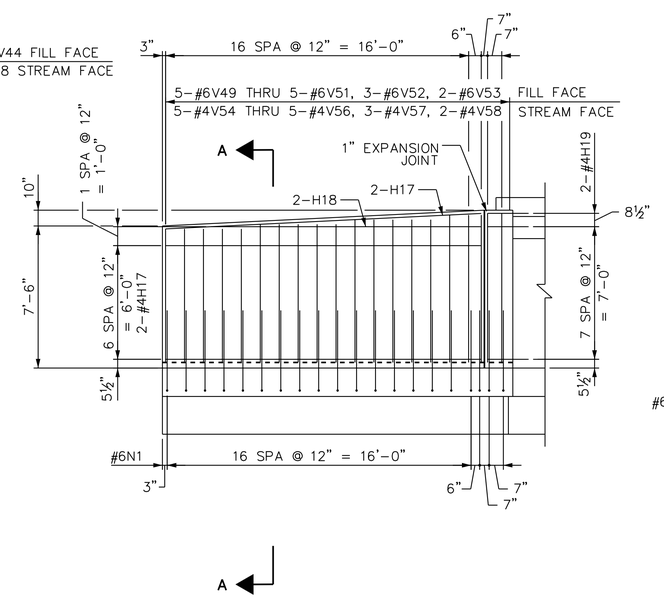

ELEVATION (W4)

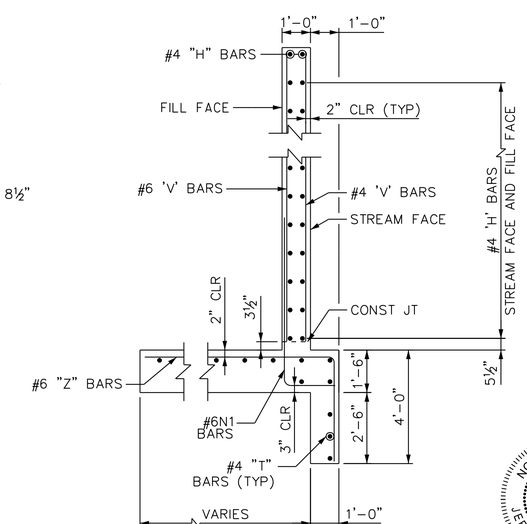

SECTION A-A

SCALE: 3/8"=1'-0"

CLASS A CONCRETE		
WINGS	28.4	C.Y.
HEADWALL	1.4	C.Y.
CURTAIN WALL	4.3	C.Y.
TOTAL	34.1	C.Y.

NORTH CAROLINA PROFESSIONAL SEAL 040384 ENGINEER JEFFREY C. WILSON

DocuSigned by: Jeffrey C. Wilson CDA045FAFCC9416... 1/26/2017

Kimley»Horn
421 Fayetteville Street, Suite 600
Raleigh, NC 27601-1772
Phone (919) 677-2000
NC LICENSE # F-0102

This document, together with the concepts and designs presented herein, as an instrument of services, is intended only for the specific purpose and client for which it was prepared. Reuse of and improper reliance of this document without written consent by Kimley-Horn and Associates, Inc. shall be without liability to Kimley-Horn and Associates, Inc.

Copyright Kimley-Horn and Associates, Inc., 2017

PROJECT NO. EB-4707B

DURHAM COUNTY

STATION: 105+70.00 -L-

STATE OF NORTH CAROLINA
DEPARTMENT OF TRANSPORTATION
RALEIGH

DOUBLE 10' x 7' CONCRETE BOX CULVERT 53° SKEW

WINGWALL OUTLET

REVISIONS						SHEET NO.
NO.	BY	DATE	NO.	BY	DATE	C6
1			3			TOTAL SHEETS
2			4			24

DRAWN BY	JIK	DATE	1/17
CHECKED BY	DJW	DATE	1/17