DocuSign Envelope ID: 41DE5634-010C-44BC-9CE2-13860EBEA9EE

Kimley»Horn
P.O. BOX 33068
RALEIGH, N.C. 27636-3068

PROJECT REFERENCE NO.	SHEET NO.
EB-4707B	UC-4D

UTILITY CONSTRUCTION ENGINEER

NORTH CAROLINA PROFESSIONAL SEAL 037953 ENGINEER NOLAN D. RANEY

DocuSigned by: Nolan Raney B0FCBFF8EADD454...

2/3/2017

CITY OF DURHAM PUBLIC WORKS DEPARTMENT APPROVED

ENGINEERING _____ DATE _____
STORM WATER _____ DATE _____
TRANSPORTATION _____ DATE _____
_____ DATE _____

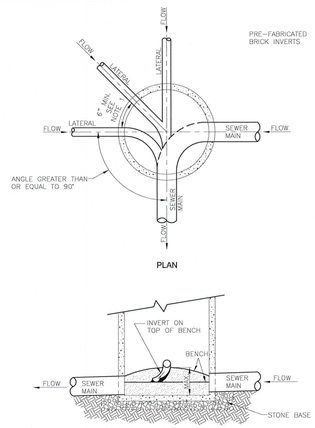

NOTES:

1. THE MINIMUM SPACING FROM THE EDGE OF A CORE FOR A LATERAL TO THE EDGE OF THE NEXT CORE SHALL BE 6 INCHES.
2. SEWER LATERAL SHALL NOT ENTER A MANHOLE AT AN ANGLE LESS THAN 90° TO THE EFFLUENT PIPE.
3. ALL LATERALS TO BE INSTALLED AT THE TOP OF THE BENCH.
4. PROVIDE BRICK OR CONCRETE FOR INVERT.
5. INVERTS TO BE BUILT FROM LATERAL TO EFFLUENT PIPE.
6. THE MAXIMUM NUMBER OF LATERALS FOR ANY ONE MANHOLE IS FIVE (5).
7. ALL NEW LATERALS INTO MANHOLES MUST BE CORE DRILLED AND INSTALLED WITH A FLEXIBLE RUBBER BOOT.

DURHAM 1869 CITY OF MEDICINE

REVISION DATE: 03/18/2010	SANITARY SEWER LATERAL AT MANHOLE CITY OF DURHAM, NORTH CAROLINA DEPARTMENT OF PUBLIC WORKS	SCALE: NTS DETAIL NO. SS-1.2

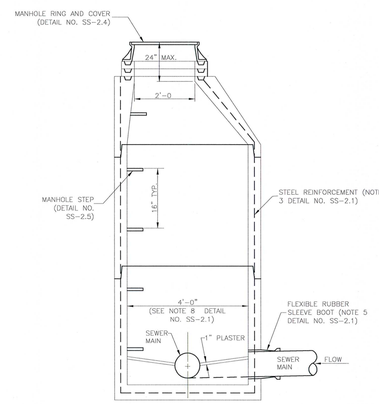

DURHAM 1869 CITY OF MEDICINE

REVISION DATE: 03/18/2010	PRECAST CONCRETE SANITARY SEWER MANHOLE CITY OF DURHAM, NORTH CAROLINA DEPARTMENT OF PUBLIC WORKS	SCALE: NTS DETAIL NO. SS-2.0

NOTES

1. ALL PRE CAST CONCRETE MANHOLES SHALL CONFORM TO THE LATEST REVISION OF ASTM C478.
2. CONCRETE SHALL BE 4000 PSI AT 28 DAYS MINIMUM.
3. STEEL REINFORCEMENT SHALL BE GRADE 40 BILLET STEEL CONFORMING TO THE LATEST REVISION OF ASTM-A-185 FOR WALL REINFORCEMENT, AND THE LATEST REVISION OF ASTM-A615 FOR THE BASE REINFORCEMENT.
4. STANDARD JOINTS SHALL BE; SEALED WITH PUTTY TYPE PLASTIC CEMENT PER FED. SPEC. SS-C-153 OR AN O-RING TYPE JOINT CONFORMING TO THE LATEST REVISION OF ASTM-C443.
5. MANHOLE INLETS AND OUTLETS SHALL BE CAST IN PLACE FLEXIBLE RUBBER SLEEVES BOOTS PER THE LATEST REVISION OF ASTM-C923.
6. INVERTS TO BE CONSTRUCTED OF BRICK WITH A CONCRETE BENCH (DETAIL NO. SS-2.2).
7. THE MAXIMUM SEPARATION OR INVERT IN TO INVERT OUT WITHIN A MANHOLE IS 0.50 FEET. WHEN THE SEPARATION IS GREATER THAN 0.5 FEET A DROP MANHOLE MUST BE USED.
8. MANHOLES GREATER THAN 18 FEET IN DEPTH SHALL HAVE AN INSIDE DIAMETER OR 5'-0". FOR SANITARY SEWER MAINS GREATER THAN EIGHTEEN INCHES (18") IN DIAMETER, MANHOLES SHALL BE A MINIMUM OF 5'-0" IN DIAMETER.
9. RIM ELEVATIONS SHALL BE AT GRADE IN STREETS & PARKING LOTS.
10. RIM ELEVATIONS ALONG OUTFALLS SHALL BE A MINIMUM OF 3' ABOVE EXISTING GROUND ELEVATION. IF THE OUTFALL IS LOCATED WITHIN THE FLOOD PLAIN, RIM ELEVATIONS SHALL BE 2' ABOVE THE 100-YEAR FLOOD ELEVATION (WHILE STILL MAINTAINING THE 3' ABOVE THE EXISTING GROUND ELEVATION MINIMUM REQUIREMENT). THE 100-YEAR FLOOD ELEVATION SHALL BE NOTED ON THE CONSTRUCTION DRAWINGS.
11. DEPENDING UPON THE HEIGHT OF THE MANHOLE, THE CITY OF DURHAM ENGINEERING DIVISION MAY REQUIRE FLAT MANHOLES, EXTERIOR STEPS AND SAFETY BARS ON TOP OF THE MANHOLE.

DURHAM 1869 CITY OF MEDICINE

REVISION DATE: 12/07/2009	PRECAST CONCRETE SANITARY SEWER MANHOLE NOTES CITY OF DURHAM, NORTH CAROLINA DEPARTMENT OF PUBLIC WORKS	SCALE: NTS DETAIL NO. SS-2.1

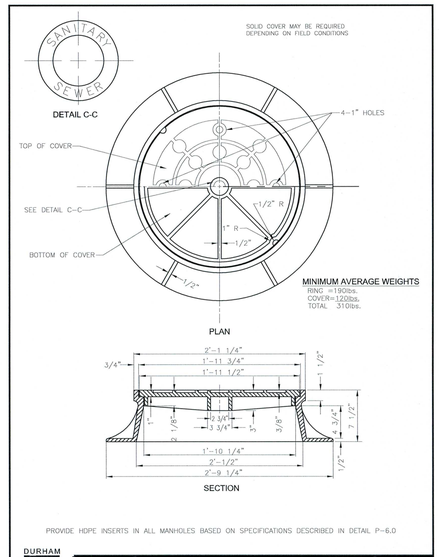

PROVIDE HDPE INSERTS IN ALL MANHOLES BASED ON SPECIFICATIONS DESCRIBED IN DETAIL P-6.0

DURHAM 1869 CITY OF MEDICINE

REVISION DATE: 09/24/10	SANITARY SEWER MANHOLE RING AND COVER CITY OF DURHAM, NORTH CAROLINA DEPARTMENT OF PUBLIC WORKS	SCALE: NTS DETAIL NO. SS-2.4

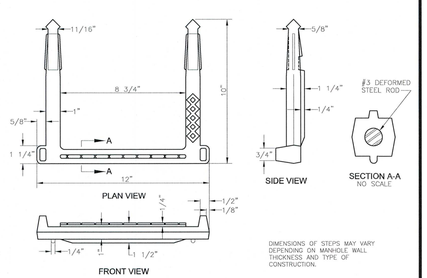

DIMENSIONS OF STEPS MAY VARY DEPENDING ON MANHOLE WALL THICKNESS AND TYPE OF CONSTRUCTION.

DURHAM 1869 CITY OF MEDICINE

REVISION DATE: 12/07/2009	PLASTIC COATED SANITARY SEWER MANHOLE STEPS CITY OF DURHAM, NORTH CAROLINA DEPARTMENT OF PUBLIC WORKS	SCALE: NTS DETAIL NO. SS-2.5

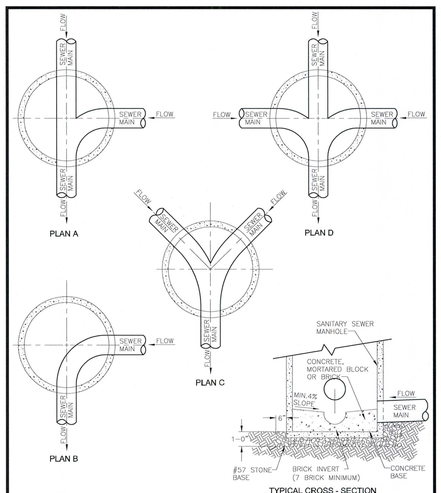

NOTES:

1. INVERT MATERIAL SHALL BE CONCRETE CAST IN PLACE WITH A SMOOTH FINISH.
2. WIDTH OF INVERT SHALL MATCH INSIDE DIAMETER OF INCOMING AND OUTGOING PIPES.
3. BRICK INVERT SHALL BE FORMED AS SHOWN.
4. ALL INVERT ELEVATIONS SHALL BE AS SHOWN ON APPROVED CONSTRUCTION PLANS.
5. BENCHES TO BE BUILT OUT OF CONCRETE, MORTARED BLOCK OR BRICK. STONE IS NOT ACCEPTABLE.

DURHAM 1869 CITY OF MEDICINE

REVISION DATE: 12/07/2009	SANITARY SEWER MANHOLE INVERT CITY OF DURHAM, NORTH CAROLINA DEPARTMENT OF PUBLIC WORKS	SCALE: NTS DETAIL NO. SS-2.6

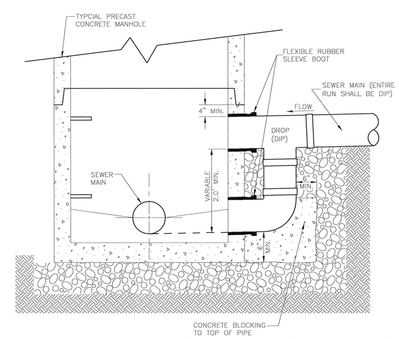

DURHAM 1869 CITY OF MEDICINE

REVISION DATE: 12/07/2009	SANITARY SEWER DROP MANHOLE CITY OF DURHAM, NORTH CAROLINA DEPARTMENT OF PUBLIC WORKS	SCALE: NTS DETAIL NO. SS-2.7

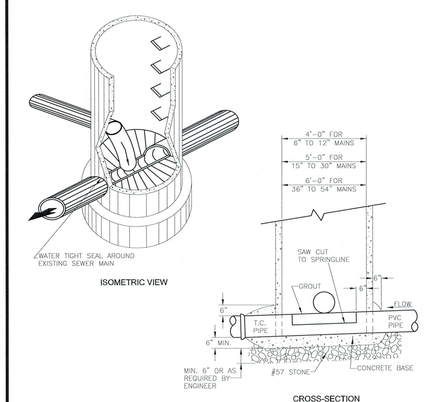

NOTES:

1. MANHOLE TO BE SET ON CONCRETE BASE AND BASE TO BE ONE POUR.
2. FOR VITRIFIED CLAY PIPE, CONCRETE SHALL BE POURED TO NEXT EXISTING JOINT (BOTH SIDES OF MANHOLE).
3. PIPE OPENING SHALL BE PRECAST BY MANUFACTURER.
4. FLOW SHALL BE MAINTAINED DURING CONSTRUCTION.
5. MINIMUM OF 4000 PSI CONCRETE REQUIRED.
6. THE CONTRACTOR SHALL PROVIDE A MINIMUM 6" COMPACTED #57 STONE BASE.
7. INVERT TO BE BUILT FROM PROPOSED PIPE TO EFFLUENT PIPE, ACCORDING TO DETAIL ON INVERTS.

DURHAM 1869 CITY OF MEDICINE

REVISION DATE: 12/07/2009	DOGHOUSE MANHOLE INSTALLATION OVER EXISTING SEWER MAIN CITY OF DURHAM, NORTH CAROLINA DEPARTMENT OF PUBLIC WORKS	SCALE: NTS DETAIL NO. SS-3.0

12/14/2016 K:\RAL_Roadway\011036290 - EB-4707 Part B\Plan\Utilities\Plan View Sheets\EB-4707_ut_dtl_uc04a_pshxdgn