DocuSign Envelope ID: CC76A77C-DD0F-41B9-8422-EE7514E49675

## REINFORCING BAR SCHEDULE

| MARK | NO. | SIZE | TYPE | LENGTH | WEIGHT | MARK | NO. | SIZE | TYPE | LENGTH | WEIGHT | MARK | NO. | SIZE | TYPE | LENGTH | WEIGHT |
|---|---|---|---|---|---|---|---|---|---|---|---|---|---|---|---|---|---|
| ✳ A1 | 795 | #5 | STR. | 48′-10″ | 40,492 | ✳ A300 | 16 | #5 | STR. | 25′-8″ | 428 | B101 | 124 | #5 | STR. | 52′-0″ | 6,725 |
| A2 | 795 | #5 | STR. | 48′-10″ | 40,492 | ✳ A301 | 16 | #5 | STR. | 24′-5″ | 407 | B102 | 186 | #5 | STR. | 50′-0″ | 9,700 |
| | | | | | | ✳ A302 | 16 | #5 | STR. | 23′-2″ | 387 | B103 | 20 | #5 | STR. | 58′-3″ | 1,215 |
| ✳ A100 | 16 | #5 | STR. | 25′-7″ | 427 | ✳ A303 | 16 | #5 | STR. | 21′-10″ | 364 | B104 | 28 | #5 | STR. | 56′-0″ | 1,635 |
| ✳ A101 | 16 | #5 | STR. | 24′-3″ | 405 | ✳ A304 | 16 | #5 | STR. | 20′-8″ | 345 | B105 | 24 | #5 | STR. | 53′-6″ | 1,339 |
| ✳ A102 | 16 | #5 | STR. | 22′-11″ | 382 | ✳ A305 | 16 | #5 | STR. | 19′-4″ | 323 | B106 | 28 | #5 | STR. | 50′-3″ | 1,468 |
| ✳ A103 | 16 | #5 | STR. | 21′-7″ | 360 | ✳ A306 | 16 | #5 | STR. | 18′-2″ | 303 | B107 | 24 | #5 | STR. | 47′-9″ | 1,195 |
| ✳ A104 | 16 | #5 | STR. | 20′-3″ | 338 | ✳ A307 | 16 | #5 | STR. | 16′-10″ | 281 | B108 | 28 | #5 | STR. | 44′-6″ | 1,300 |
| ✳ A105 | 16 | #5 | STR. | 19′-0″ | 317 | ✳ A308 | 16 | #5 | STR. | 15′-7″ | 260 | B109 | 24 | #5 | STR. | 42′-3″ | 1,058 |
| ✳ A106 | 16 | #5 | STR. | 17′-8″ | 295 | ✳ A309 | 16 | #5 | STR. | 14′-3″ | 238 | B110 | 28 | #5 | STR. | 39′-3″ | 1,146 |
| ✳ A107 | 16 | #5 | STR. | 16′-4″ | 273 | ✳ A310 | 16 | #5 | STR. | 13′-1″ | 218 | B111 | 24 | #5 | STR. | 36′-9″ | 920 |
| ✳ A108 | 16 | #5 | STR. | 15′-0″ | 250 | ✳ A311 | 16 | #5 | STR. | 11′-9″ | 196 | B112 | 20 | #5 | STR. | 33′-9″ | 704 |
| ✳ A109 | 16 | #5 | STR. | 13′-9″ | 229 | ✳ A312 | 16 | #5 | STR. | 9′-6″ | 159 | | | | | | |
| ✳ A110 | 16 | #5 | STR. | 12′-5″ | 207 | ✳ A313 | 16 | #5 | STR. | 8′-2″ | 136 | ✳ G1 | 2 | #5 | STR. | 43′-3″ | 90 |
| ✳ A111 | 16 | #5 | STR. | 11′-1″ | 185 | ✳ A314 | 1 | #5 | STR. | 11′-5″ | 12 | ✳ G2 | 2 | #5 | STR. | 31′-6″ | 66 |
| ✳ A112 | 16 | #5 | STR. | 9′-1″ | 152 | ✳ A315 | 1 | #5 | STR. | 10′-9″ | 11 | | | | | | |
| ✳ A113 | 16 | #5 | STR. | 7′-9″ | 129 | ✳ A316 | 1 | #5 | STR. | 10′-1″ | 11 | ✳ J1 | 146 | #4 | ① | 1′-5″ | 138 |
| ✳ A114 | 1 | #5 | STR. | 10′-3″ | 11 | ✳ A317 | 1 | #5 | STR. | 9′-6″ | 10 | | | | | | |
| ✳ A115 | 1 | #5 | STR. | 9′-11″ | 10 | ✳ A318 | 1 | #5 | STR. | 8′-10″ | 9 | ✳ K1 | 9 | #5 | ② | 22′-5″ | 210 |
| ✳ A116 | 1 | #5 | STR. | 9′-7″ | 10 | ✳ A319 | 1 | #5 | STR. | 8′-3″ | 9 | ✳ K2 | 9 | #5 | ② | 17′-5″ | 163 |
| ✳ A117 | 1 | #5 | STR. | 9′-3″ | 10 | ✳ A320 | 1 | #5 | STR. | 7′-7″ | 8 | ✳ K3 | 6 | #5 | ③ | 17′-1″ | 107 |
| ✳ A118 | 1 | #5 | STR. | 8′-11″ | 9 | ✳ A321 | 1 | #5 | STR. | 7′-0″ | 7 | ✳ K4 | 6 | #5 | ③ | 12′-10″ | 80 |
| ✳ A119 | 1 | #5 | STR. | 8′-7″ | 9 | ✳ A322 | 1 | #5 | STR. | 6′-4″ | 7 | | | | | | |
| ✳ A120 | 1 | #5 | STR. | 8′-3″ | 9 | ✳ A323 | 1 | #5 | STR. | 5′-8″ | 6 | ✳ S1 | 96 | #4 | ④ | 5′-10″ | 374 |
| ✳ A121 | 1 | #5 | STR. | 7′-11″ | 8 | ✳ A324 | 1 | #5 | STR. | 5′-1″ | 5 | ✳ S2 | 4 | #4 | ④ | 5′-1″ | 14 |
| ✳ A122 | 1 | #5 | STR. | 7′-7″ | 8 | ✳ A325 | 4 | #5 | STR. | 4′-5″ | 18 | ✳ S3 | 8 | #4 | ④ | 4′-4″ | 23 |
| ✳ A123 | 1 | #5 | STR. | 7′-3″ | 8 | ✳ A326 | 4 | #5 | STR. | 3′-0″ | 13 | | | | | | |
| ✳ A124 | 1 | #5 | STR. | 6′-11″ | 7 | ✳ A327 | 1 | #6 | STR. | 21′-1″ | 32 | | | | | | |
| ✳ A125 | 1 | #5 | STR. | 6′-7″ | 7 | ✳ A328 | 1 | #6 | STR. | 22′-2″ | 33 | | | | | | |
| ✳ A126 | 1 | #5 | STR. | 6′-3″ | 7 | ✳ A329 | 1 | #6 | STR. | 23′-2″ | 35 | | | | | | |
| ✳ A127 | 1 | #5 | STR. | 5′-11″ | 6 | | | | | | | | | | | | |
| ✳ A128 | 1 | #5 | STR. | 5′-8″ | 6 | A400 | 16 | #5 | STR. | 25′-8″ | 428 | | | | | | |
| ✳ A129 | 1 | #5 | STR. | 5′-4″ | 6 | A401 | 16 | #5 | STR. | 24′-5″ | 407 | | | | | | |
| ✳ A130 | 1 | #5 | STR. | 5′-0″ | 5 | A402 | 16 | #5 | STR. | 23′-2″ | 387 | | | | | | |
| ✳ A131 | 7 | #5 | STR. | 4′-10″ | 35 | A403 | 16 | #5 | STR. | 21′-10″ | 364 | | | | | | |
| ✳ A132 | 7 | #5 | STR. | 3′-6″ | 26 | A404 | 16 | #5 | STR. | 20′-8″ | 345 | | | | | | |
| ✳ A133 | 1 | #6 | STR. | 27′-3″ | 41 | A405 | 16 | #5 | STR. | 19′-4″ | 323 | | | | | | |
| ✳ A134 | 1 | #6 | STR. | 28′-3″ | 42 | A406 | 16 | #5 | STR. | 18′-2″ | 303 | | | | | | |
| ✳ A135 | 1 | #6 | STR. | 29′-4″ | 44 | A407 | 16 | #5 | STR. | 16′-10″ | 281 | | | | | | |
| | | | | | | A408 | 16 | #5 | STR. | 15′-7″ | 260 | | | | | | |
| A200 | 16 | #5 | STR. | 25′-7″ | 427 | A409 | 16 | #5 | STR. | 14′-3″ | 238 | | | | | | |
| A201 | 16 | #5 | STR. | 24′-3″ | 405 | A410 | 16 | #5 | STR. | 13′-1″ | 218 | | | | | | |
| A202 | 16 | #5 | STR. | 22′-11″ | 382 | A411 | 16 | #5 | STR. | 11′-9″ | 196 | | | | | | |
| A203 | 16 | #5 | STR. | 21′-7″ | 360 | A412 | 16 | #5 | STR. | 10′-6″ | 175 | | | | | | |
| A204 | 16 | #5 | STR. | 20′-3″ | 338 | A413 | 16 | #5 | STR. | 9′-3″ | 154 | | | | | | |
| A205 | 16 | #5 | STR. | 19′-0″ | 317 | A414 | 1 | #5 | STR. | 13′-7″ | 14 | | | | | | |
| A206 | 16 | #5 | STR. | 17′-8″ | 295 | A415 | 1 | #5 | STR. | 13′-0″ | 14 | | | | | | |
| A207 | 16 | #5 | STR. | 16′-4″ | 273 | A416 | 1 | #5 | STR. | 12′-4″ | 13 | | | | | | |
| A208 | 16 | #5 | STR. | 15′-0″ | 250 | A417 | 1 | #5 | STR. | 11′-9″ | 12 | | | | | | |
| A209 | 16 | #5 | STR. | 13′-9″ | 229 | A418 | 1 | #5 | STR. | 11′-1″ | 12 | | | | | | |
| A210 | 16 | #5 | STR. | 12′-5″ | 207 | A419 | 1 | #5 | STR. | 10′-5″ | 11 | | | | | | |
| A211 | 16 | #5 | STR. | 11′-1″ | 185 | A420 | 1 | #5 | STR. | 9′-10″ | 10 | | | | | | |
| A212 | 16 | #5 | STR. | 9′-8″ | 161 | A421 | 1 | #5 | STR. | 9′-2″ | 10 | | | | | | |
| A213 | 16 | #5 | STR. | 8′-5″ | 140 | A422 | 1 | #5 | STR. | 8′-7″ | 9 | | | | | | |
| A214 | 1 | #5 | STR. | 11′-11″ | 12 | A423 | 1 | #5 | STR. | 7′-11″ | 8 | | | | | | |
| A215 | 1 | #5 | STR. | 11′-7″ | 12 | A424 | 1 | #5 | STR. | 7′-3″ | 8 | | | | | | |
| A216 | 1 | #5 | STR. | 11′-3″ | 12 | A425 | 6 | #5 | STR. | 6′-6″ | 41 | | | | | | |
| A217 | 1 | #5 | STR. | 10′-11″ | 11 | A426 | 5 | #5 | STR. | 5′-0″ | 26 | | | | | | |
| A218 | 1 | #5 | STR. | 10′-7″ | 11 | | | | | | | | | | | | |
| A219 | 1 | #5 | STR. | 10′-3″ | 11 | ✳ B1 | 68 | #5 | STR. | 52′-0″ | 3,688 | | | | | | |
| A220 | 1 | #5 | STR. | 9′-11″ | 10 | ✳ B2 | 102 | #5 | STR. | 50′-0″ | 5,319 | | | | | | |
| A221 | 1 | #5 | STR. | 9′-7″ | 10 | ✳ B3 | 16 | #6 | STR. | 59′-0″ | 1,418 | | | | | | |
| A222 | 1 | #5 | STR. | 9′-3″ | 10 | ✳ B4 | 16 | #6 | STR. | 56′-0″ | 1,346 | | | | | | |
| A223 | 1 | #5 | STR. | 8′-11″ | 9 | ✳ B5 | 16 | #6 | STR. | 52′-9″ | 1,268 | | | | | | |
| A224 | 1 | #5 | STR. | 8′-7″ | 9 | ✳ B6 | 16 | #6 | STR. | 49′-9″ | 1,196 | | | | | | |
| A225 | 1 | #5 | STR. | 8′-3″ | 9 | ✳ B7 | 16 | #6 | STR. | 46′-6″ | 1,117 | | | | | | |
| A226 | 1 | #5 | STR. | 7′-11″ | 8 | ✳ B8 | 16 | #6 | STR. | 43′-3″ | 1,039 | | | | | | |
| A227 | 1 | #5 | STR. | 7′-7″ | 8 | ✳ B9 | 16 | #6 | STR. | 40′-0″ | 961 | | | | | | |
| A228 | 1 | #5 | STR. | 7′-4″ | 8 | ✳ B10 | 16 | #6 | STR. | 37′-0″ | 889 | | | | | | |
| A229 | 1 | #5 | STR. | 7′-0″ | 7 | ✳ B11 | 8 | #6 | STR. | 33′-9″ | 406 | | | | | | |
| A230 | 1 | #5 | STR. | 6′-8″ | 7 | ✳ B12 | 186 | #6 | STR. | 50′-9″ | 14,178 | | | | | | |
| A231 | 10 | #5 | STR. | 6′-3″ | 65 | | | | | | | ✳ EPOXY COATED REINF. STEEL (LBS.) | | | | | 83,126 |
| A232 | 9 | #5 | STR. | 4′-0″ | 38 | | | | | | | REINF. STEEL (LBS.) | | | | | 77,400 |

## SUPERSTRUCTURE REINFORCING STEEL LENGTHS ARE BASED ON THE FOLLOWING MINIMUM SPLICE LENGTHS

| BAR SIZE | SUPERSTRUCTURE EXCEPT APPROACH SLABS, PARAPET, AND BARRIER RAIL | | APPROACH SLABS | | PARAPET AND BARRIER RAIL |
|---|---|---|---|---|---|
| | EPOXY COATED | UNCOATED | EPOXY COATED | UNCOATED | |
| #4 | 2′-0″ | 1′-9″ | 2′-0″ | 1′-9″ | 2′-9″ |
| #5 | 2′-6″ | 2′-2″ | 2′-6″ | 2′-2″ | 3′-5″ |
| #6 | 3′-0″ | 2′-7″ | 3′-10″ | 2′-7″ | 4′-4″ |
| #7 | 5′-3″ | 3′-6″ | | | |
| #8 | 6′-10″ | 4′-7″ | | | |

## SUPERSTRUCTURE BILL OF MATERIAL

| | CLASS AA CONCRETE | EPOXY COATED STEEL REINFORCING | STEEL REINFORCING |
|---|---|---|---|
| | (CU. YDS.) | (LBS.) | (LBS.) |
| SPANS A-B | -- | 83,126 | 77,400 |
| POUR 1 | 237.6 | -- | -- |
| POUR 2 | 222.0 | -- | -- |
| POUR 3 | 247.5 | -- | -- |
| POUR 4 | 15.3 | -- | -- |
| POUR 5 | 21.2 | -- | -- |
| | | | |
| TOTAL✳ | 743.6 | 83,126 | 77,400 |

✳ QUANTITIES FOR CONCRETE BARRIER RAIL ARE NOT INCLUDED

## BAR TYPES

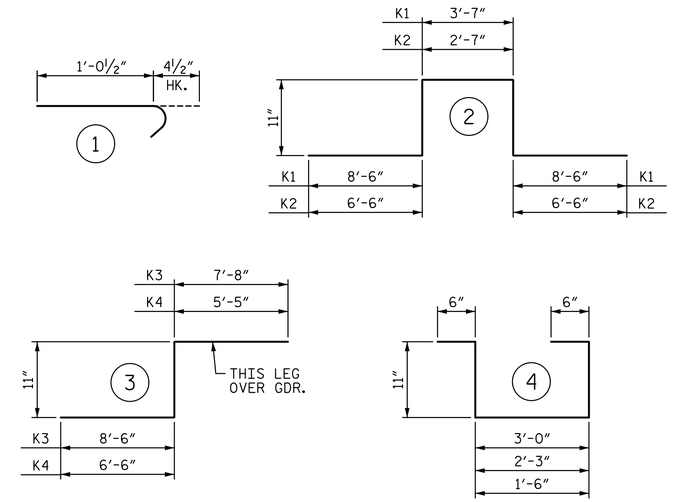


ALL BAR DIMENSIONS ARE OUT TO OUT

## GROOVING BRIDGE FLOORS

| | |
|---|---|
| APPROACH SLABS | 2,087 SQ.FT. |
| BRIDGE DECK | 17,890 SQ.FT. |
| TOTAL | 19,977 SQ.FT. |

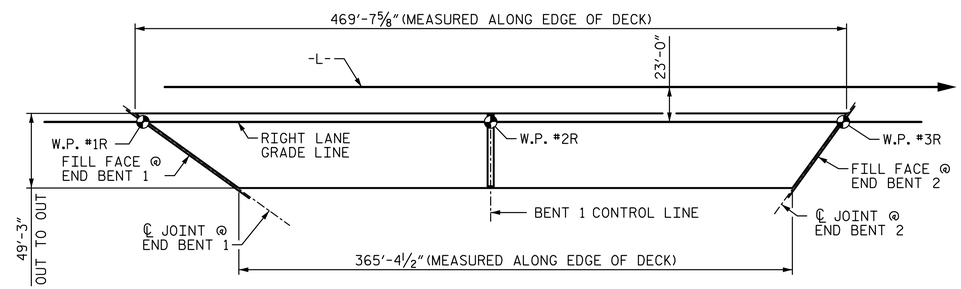


## LAYOUT FOR COMPUTING AREA OF REINFORCED CONCRETE DECK SLAB

(SQ. FT. = 20,563)

PROJECT NO. R-2707C

CLEVELAND COUNTY

STATION: 596+50.98 -L-

DOCUMENT NOT CONSIDERED FINAL UNLESS ALL SIGNATURES COMPLETED

NORTH CAROLINA PROFESSIONAL SEAL 40317 ENGINEER TONY R. LAWS JR.

DocuSigned by: Tony R. Laws, Jr. C40CE06F6B764F7...

12/13/2016

STV 100 Years

STV ENGINEERS, INC.
900 West Trade St., Suite 715
Charlotte, NC 28202
NC License Number F-0991

STATE OF NORTH CAROLINA
DEPARTMENT OF TRANSPORTATION
RALEIGH

SUPERSTRUCTURE

BILL OF MATERIAL

(SITE 6R)

| REVISIONS | | | | | | | | SHEET NO. |
|---|---|---|---|---|---|---|---|---|
| NO. | BY: | DATE: | NO. | BY: | DATE: | | | S8-32 |
| 1 | | | 3 | | | | | TOTAL SHEETS |
| 2 | | | 4 | | | | | 44 |

DRAWN BY : VMW DATE : 10-16
CHECKED BY : AJP DATE : 10-16

DESIGN ENGINEER OF RECORD: A. PETER DATE : 10-16

R:\408_063_R2707C_SMU_SBOM_S8-32.dgn 12/13/2016 7:03:36 PM alveyac