DocuSign Envelope ID: 1DA0EE24-5FE9-4949-965B-1C2D4E2A0F2F

REINFORCING BAR SCHEDULE

MARK	NO.	SIZE	TYPE	LENGTH	WEIGHT	MARK	NO.	SIZE	TYPE	LENGTH	WEIGHT	MARK	NO.	SIZE	TYPE	LENGTH	WEIGHT
✳ A1	1183	#5	STR.	48'-10"	60,254	✳ A300	16	#5	STR.	25'-8"	428	B101	496	#5	STR.	60'-0"	31,040
A2	1183	#5	STR.	48'-10"	60,254	✳ A301	16	#5	STR.	24'-5"	407	B102	20	#5	STR.	48'-3"	1,006
						✳ A302	16	#5	STR.	23'-2"	387	B103	28	#5	STR.	45'-3"	1,321
✳ A100	16	#5	STR.	25'-7"	427	✳ A303	16	#5	STR.	21'-10"	364	B104	24	#5	STR.	42'-6"	1,064
✳ A101	16	#5	STR.	24'-3"	405	✳ A304	16	#5	STR.	20'-8"	345	B105	28	#5	STR.	40'-3"	1,175
✳ A102	16	#5	STR.	22'-11"	382	✳ A305	16	#5	STR.	19'-4"	323	B106	24	#5	STR.	37'-9"	945
✳ A103	16	#5	STR.	21'-7"	360	✳ A306	16	#5	STR.	18'-2"	303	B107	28	#5	STR.	34'-9"	1,015
✳ A104	16	#5	STR.	20'-3"	338	✳ A307	16	#5	STR.	16'-10"	281	B108	24	#5	STR.	32'-3"	807
✳ A105	16	#5	STR.	19'-0"	317	✳ A308	16	#5	STR.	15'-7"	260	B109	28	#5	STR.	29'-0"	847
✳ A106	16	#5	STR.	17'-8"	295	✳ A309	16	#5	STR.	14'-3"	238	B110	24	#5	STR.	26'-9"	670
✳ A107	16	#5	STR.	16'-4"	273	✳ A310	16	#5	STR.	13'-1"	218	B111	20	#5	STR.	23'-9"	495
✳ A108	16	#5	STR.	15'-0"	250	✳ A311	16	#5	STR.	11'-9"	196						
✳ A109	16	#5	STR.	13'-9"	229	✳ A312	16	#5	STR.	9'-6"	159	✳ G1	2	#5	STR.	43'-3"	90
✳ A110	16	#5	STR.	12'-5"	207	✳ A313	16	#5	STR.	8'-2"	136	✳ G2	2	#5	STR.	31'-6"	66
✳ A111	16	#5	STR.	11'-1"	185	✳ A314	1	#5	STR.	11'-5"	12						
✳ A112	16	#5	STR.	9'-1"	152	✳ A315	1	#5	STR.	10'-9"	11	✳ J1	146	#4	1	1'-5"	138
✳ A113	16	#5	STR.	7'-9"	129	✳ A316	1	#5	STR.	10'-1"	11						
✳ A114	1	#5	STR.	10'-3"	11	✳ A317	1	#5	STR.	9'-6"	10	✳ K1	9	#5	2	22'-5"	210
✳ A115	1	#5	STR.	9'-11"	10	✳ A318	1	#5	STR.	8'-10"	9	✳ K2	9	#5	2	17'-5"	163
✳ A116	1	#5	STR.	9'-7"	10	✳ A319	1	#5	STR.	8'-3"	9	✳ K3	6	#5	3	17'-1"	107
✳ A117	1	#5	STR.	9'-3"	10	✳ A320	1	#5	STR.	7'-7"	8	✳ K4	6	#5	3	12'-10"	80
✳ A118	1	#5	STR.	8'-11"	9	✳ A321	1	#5	STR.	7'-0"	7						
✳ A119	1	#5	STR.	8'-7"	9	✳ A322	1	#5	STR.	6'-4"	7	✳ S1	96	#4	4	5'-10"	374
✳ A120	1	#5	STR.	8'-3"	9	✳ A323	1	#5	STR.	5'-8"	6	✳ S2	4	#4	4	5'-1"	14
✳ A121	1	#5	STR.	7'-11"	8	✳ A324	1	#5	STR.	5'-1"	5	✳ S3	8	#4	4	4'-4"	23
✳ A122	1	#5	STR.	7'-7"	8	✳ A325	4	#5	STR.	4'-5"	18						
✳ A123	1	#5	STR.	7'-3"	8	✳ A326	4	#5	STR.	3'-0"	13						
✳ A124	1	#5	STR.	6'-11"	7	✳ A327	1	#6	STR.	21'-1"	32						
✳ A125	1	#5	STR.	6'-7"	7	✳ A328	1	#6	STR.	22'-2"	33						
✳ A126	1	#5	STR.	6'-3"	7	✳ A329	1	#6	STR.	23'-2"	35						
✳ A127	1	#5	STR.	5'-11"	6												
✳ A128	1	#5	STR.	5'-8"	6	A400	16	#5	STR.	25'-8"	428						
✳ A129	1	#5	STR.	5'-4"	6	A401	16	#5	STR.	24'-5"	407						
✳ A130	1	#5	STR.	5'-0"	5	A402	16	#5	STR.	23'-2"	387						
✳ A131	7	#5	STR.	4'-10"	35	A403	16	#5	STR.	21'-10"	364						
✳ A132	7	#5	STR.	3'-6"	26	A404	16	#5	STR.	20'-8"	345						
✳ A133	1	#6	STR.	27'-3"	41	A405	16	#5	STR.	19'-4"	323						
✳ A134	1	#6	STR.	28'-3"	42	A406	16	#5	STR.	18'-2"	303						
✳ A135	1	#6	STR.	29'-4"	44	A407	16	#5	STR.	16'-10"	281						
						A408	16	#5	STR.	15'-7"	260						
A200	16	#5	STR.	25'-7"	427	A409	16	#5	STR.	14'-3"	238						
A201	16	#5	STR.	24'-3"	405	A410	16	#5	STR.	13'-1"	218						
A202	16	#5	STR.	22'-11"	382	A411	16	#5	STR.	11'-9"	196						
A203	16	#5	STR.	21'-7"	360	A412	16	#5	STR.	10'-6"	175						
A204	16	#5	STR.	20'-3"	338	A413	16	#5	STR.	9'-3"	154						
A205	16	#5	STR.	19'-0"	317	A414	1	#5	STR.	13'-7"	14						
A206	16	#5	STR.	17'-8"	295	A415	1	#5	STR.	13'-0"	14						
A207	16	#5	STR.	16'-4"	273	A416	1	#5	STR.	12'-4"	13						
A208	16	#5	STR.	15'-0"	250	A417	1	#5	STR.	11'-9"	12						
A209	16	#5	STR.	13'-9"	229	A418	1	#5	STR.	11'-1"	12						
A210	16	#5	STR.	12'-5"	207	A419	1	#5	STR.	10'-5"	11						
A211	16	#5	STR.	11'-1"	185	A420	1	#5	STR.	9'-10"	10						
A212	16	#5	STR.	9'-8"	161	A421	1	#5	STR.	9'-2"	10						
A213	16	#5	STR.	8'-5"	140	A422	1	#5	STR.	8'-7"	9						
A214	1	#5	STR.	11'-11"	12	A423	1	#5	STR.	7'-11"	8						
A215	1	#5	STR.	11'-7"	12	A424	1	#5	STR.	7'-3"	8						
A216	1	#5	STR.	11'-3"	12	A425	6	#5	STR.	6'-6"	41						
A217	1	#5	STR.	10'-11"	11	A426	5	#5	STR.	5'-0"	26						
A218	1	#5	STR.	10'-7"	11												
A219	1	#5	STR.	10'-3"	11	✳ B1	136	#5	STR.	60'-0"	8,511						
A220	1	#5	STR.	9'-11"	10	✳ B2	136	#6	STR.	60'-0"	12,256						
A221	1	#5	STR.	9'-7"	10	✳ B3	16	#6	STR.	49'-7"	1,192						
A222	1	#5	STR.	9'-3"	10	✳ B4	16	#6	STR.	46'-7"	1,119						
A223	1	#5	STR.	8'-11"	9	✳ B5	16	#6	STR.	43'-5"	1,043						
A224	1	#5	STR.	8'-7"	9	✳ B6	16	#6	STR.	40'-3"	967						
A225	1	#5	STR.	8'-3"	9	✳ B7	16	#6	STR.	37'-1"	891						
A226	1	#5	STR.	7'-11"	8	✳ B8	16	#6	STR.	33'-11"	815						
A227	1	#5	STR.	7'-7"	8	✳ B9	16	#6	STR.	30'-9"	739						
A228	1	#5	STR.	7'-4"	8	✳ B10	16	#6	STR.	27'-7"	663						
A229	1	#5	STR.	7'-0"	7	✳ B11	8	#6	STR.	24'-5"	293						
A230	1	#5	STR.	6'-8"	7	✳ B12	186	#6	STR.	36'-0"	10,057						
A231	10	#5	STR.	6'-3"	65	✳ B13	248	#6	STR.	52'-0"	19,370	✳ EPOXY COATED REINF. STEEL (LBS.)					127,979
A232	9	#5	STR.	4'-0"	38							REINF. STEEL (LBS.)					109,142

SUPERSTRUCTURE REINFORCING STEEL LENGTHS ARE BASED ON THE FOLLOWING MINIMUM SPLICE LENGTHS

BAR SIZE	SUPERSTRUCTURE EXCEPT APPROACH SLABS, PARAPET, AND BARRIER RAIL		APPROACH SLABS		PARAPET AND BARRIER RAIL
	EPOXY COATED	UNCOATED	EPOXY COATED	UNCOATED	
#4	2'-0"	1'-9"	2'-0"	1'-9"	2'-9"
#5	2'-6"	2'-2"	2'-6"	2'-2"	3'-5"
#6	3'-0"	2'-7"	3'-10"	2'-7"	4'-4"
#7	5'-3"	3'-6"			
#8	6'-10"	4'-7"			

SUPERSTRUCTURE BILL OF MATERIAL

	CLASS AA CONCRETE	EPOXY COATED STEEL REINFORCING	STEEL REINFORCING
	(CU. YDS.)	(LBS.)	(LBS.)
SPANS A-D	--	127,979	109,142
POUR 1	129.7	--	--
POUR 2	154.2	--	--
POUR 3	246.2	--	--
POUR 4	247.3	--	--
POUR 5	95.9	--	--
POUR 6	69.8	--	--
POUR 7	69.8	--	--
POUR 8	15.3	--	--
POUR 9	21.2	--	--
TOTAL✳	1,049.4	127,979	109,142

✳ QUANTITIES FOR CONCRETE BARRIER RAIL ARE NOT INCLUDED

BAR TYPES

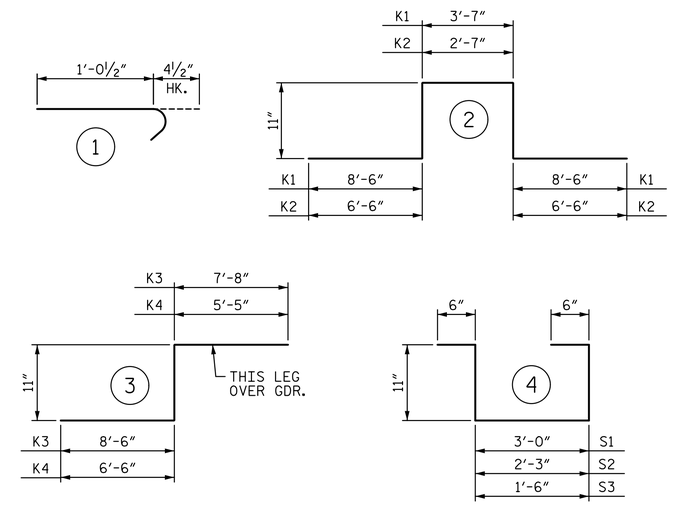

ALL BAR DIMENSIONS ARE OUT TO OUT

GROOVING BRIDGE FLOORS

APPROACH SLABS	2,087 SQ.FT.
BRIDGE DECK	25,537 SQ.FT.
TOTAL	27,624 SQ.FT.

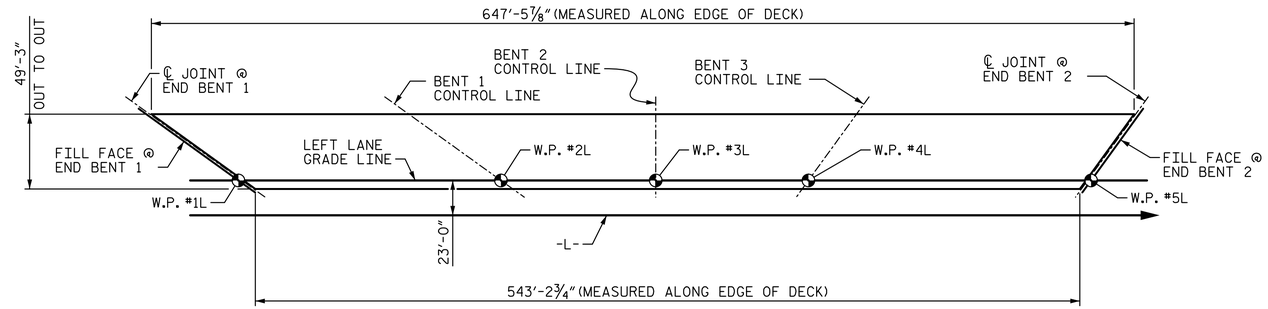

LAYOUT FOR COMPUTING AREA OF REINFORCED CONCRETE DECK SLAB

(SQ. FT. = 29,322)

PROJECT NO. R-2707C

CLEVELAND COUNTY

STATION: 596+50.98 -L-

DOCUMENT NOT CONSIDERED FINAL UNLESS ALL SIGNATURES COMPLETED

NORTH CAROLINA PROFESSIONAL SEAL 40317 ENGINEER TONY R. LAWS, JR.

DocuSigned by: Tony R. Laws, Jr. 12/13/2016

STV 100 Years

STV ENGINEERS, INC.
900 West Trade St., Suite 715
Charlotte, NC 28202
NC License Number F-0991

STATE OF NORTH CAROLINA
DEPARTMENT OF TRANSPORTATION
RALEIGH

SUPERSTRUCTURE

BILL OF MATERIAL

(SITE 6L)

REVISIONS								SHEET NO.
NO.	BY:	DATE:	NO.	BY:	DATE:			S7-38
1			3					TOTAL SHEETS
2			4					56

DRAWN BY : VMW DATE : 10-16
CHECKED BY : AJP DATE : 10-16

DESIGN ENGINEER OF RECORD: V. WU DATE : 10-16

R:\407_075_R2707C_SMU_SBOM_S7-38.dgn 12/13/2016 6:59:45 PM alveyac