DocuSign Envelope ID: 901BDDA9-B95D-4CD2-9EC6-1A37AA5CA05A

PROJECT REFERENCE NO.	SHEET NO.
R-2707C	2D-2

R/W SHEET NO.

ROADWAY DESIGN ENGINEER — NORTH CAROLINA PROFESSIONAL ENGINEER SEAL 15869, T.R. REID — DocuSigned by: Timothy R. Reid, 26569A242E83411... 4/12/2017

HYDRAULICS ENGINEER — NORTH CAROLINA PROFESSIONAL ENGINEER SEAL 26971, JOSHUA DALTON — DocuSigned by: Joshua Dalton, 1089AD8C14994C3... 4/12/2017

moffatt & nichol, 1616 EAST MILLBROOK ROAD, SUITE 160, RALEIGH, NORTH CAROLINA 27609, (919) 781-4626 VOICE (919) 781-4869 FAX

SUNGATE DESIGN GROUP, P.A., 915 JONES FRANKLIN ROAD, RALEIGH, NORTH CAROLINA 27606, TEL (919) 859-2243 FAX (919) 859-6258, ENG FIRM LICENSE NO. C-890

DOCUMENT NOT CONSIDERED FINAL UNLESS ALL SIGNATURES COMPLETED

DETAIL 31
OUTLET CHANNEL DETAIL
NOT TO SCALE

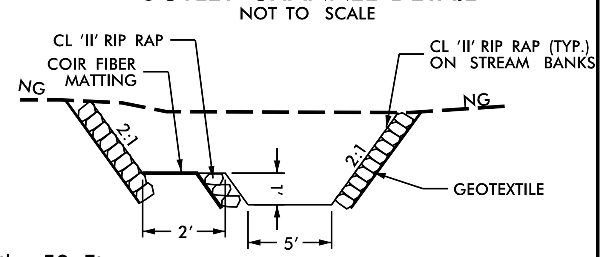

Length = 50 Ft.
Est. = 110 Tons of Class 'II' Rip-Rap, 200 SY Geotextile

STA 554+00 (RT) -L- (S=1.2%)

DETAIL 32
STANDARD 'V' DITCH
(Not to Scale)

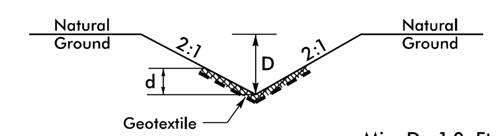

Min. D=1.0 Ft.
Max. d=1.0 Ft.
Type of Liner= Class 'B' Rip-Rap

STA. 583+35 (LT) -L- (S=6.4%)

DETAIL 33
STANDARD 'V' DITCH
(Not to Scale)

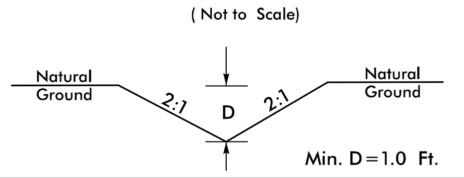

Min. D=1.0 Ft.

STA. 583+30 (RT) -L- (S=0.6%)

DETAIL 34
STANDARD BASE CHANNEL
(Not to Scale)

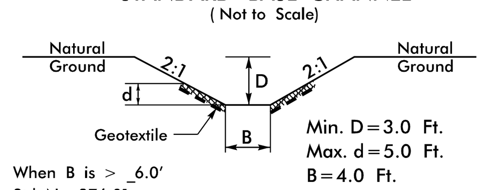

Min. D=3.0 Ft.
Max. d=5.0 Ft.
B=4.0 Ft.
When B is > 6.0'
Std. No. 876.01
Type of Liner= Class 'II' Rip-Rap

STA 405+25 (LT) -L- (S=1.3%) BURY PIPE INVERT 1.0'
STA 512+90 (RT) -L- (S=7.0%) BURY PIPE INV 1.0'
STA 30+00 (LT) -Y8-REV (S=2.5%) BURY PIPE INV 1.0'

DETAIL 35
PIPE INLET /OUTLET CHANNEL BANK STABILIZATION
(Not to Scale)

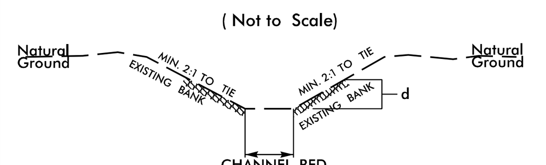

Length = Variable
d=5.0 Ft.
Type of Liner= Class 'II' Rip-Rap

STA 406+70 (RT) -L- (L=22') BURY PIPE INV 1.0'
STA 425+50 (LT) -L- (L=31') BURY PIPE INV 1.0'
STA 426+75 (RT) -L- (L=24') BURY PIPE INV 1.0'
STA 439+25 (LT) -L- (L=25') BURY PIPE INV 1.0'
STA 490+40 (LT) -L- (L=22') BURY PIPE INV 1.0'
STA 491+55 (RT) -L- (L=22') BURY PIPE INV 1.0'
STA 554+20 (RT) -L- (L=39')
STA 554+55 (LT) -L- (L=30') BURY PIPE INV 1.0'
STA 15+25 (LT) -Y9RPA- (L=20') BURY PIPE INV 1.0'
STA 6+45 (LT) -Y9RPD- (L=35') BURY PIPE INV 1.0'
STA 31+70 (RT) -Y8-REV (L=27') BURY PIPE INV 1.0'
STA 59+20 (RT) -Y11-REV2 (L=23') BURY PIPE INV 1.0'

DETAIL 36
PIPE INLET /OUTLET CHANNEL BANK STABILIZATION
(Not to Scale)

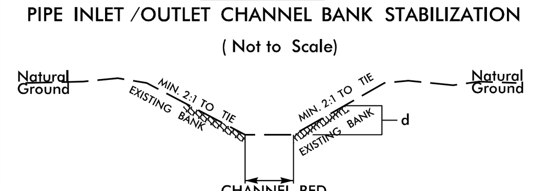

Length = Variable
d=4.0 Ft.
Type of Liner= Class 'II' Rip-Rap

STA 413+60 (LT) -L- (L=17') DO NOT BURY PIPE
STA 415+70 (RT) -L- (L=22') DO NOT BURY PIPE
STA 475+75 (LT) -L- (L=17') BURY PIPE INV 0.8'
STA 476+85 (RT) -L- (L=16') BURY PIPE INV 0.8'
STA 10+75 (LT) -Y9RPB- (L=17') BURY PIPE INV 0.6'
STA 14+20 (RT) -Y16-REV (L=20') BURY PIPE INV 1.0'
STA 14+85 (LT) -Y16-REV (L=20') BURY PIPE INV 1.0'

DETAIL 37
INLET CHANNEL
(Not to Scale)

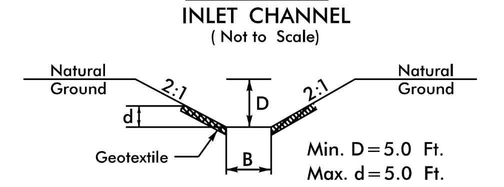

Min. D=5.0 Ft.
Max. d=5.0 Ft.
B=8.0 Ft.
Type of Liner= Class 'II' Rip-Rap

STA 453+60 (RT) -L- (S=0.5%)

DETAIL 38
INLET & OUTLET CHANNEL BANK STABILIZATION
(Not to Scale)

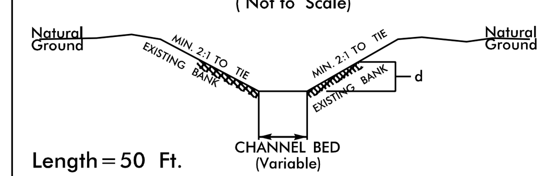

Length = 50 Ft.
d=5 Ft.
Est. = 100 Tons of Class 'II' Rip-Rap

STA 452+50 (LT) -L-

DETAIL 39
STANDARD BASE CHANNEL
(Not to Scale)

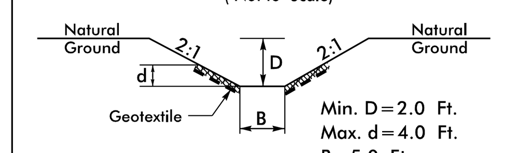

Min. D=2.0 Ft.
Max. d=4.0 Ft.
B=5.0 Ft.
Type of Liner= Class 'II' Rip-Rap

STA 503+10 (LT) -L- (S=0.5%) BURY PIPE INV 1.0'
STA 554+35 (RT) -L- (S=1.2%) BURY PIPE INV 1.0'

DETAIL 40
LATERAL BASE DITCH
(Not to Scale)

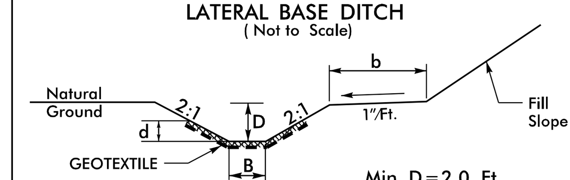

Min. D=2.0 Ft.
Max. d=2.0 Ft.
B=3.0 Ft.
b=5.0 Ft.
*When B is < 6.0'
Type of Liner= Class 'II' Rip-Rap

FROM STA 17+15 TO STA 19+50 (RT) -Y9RPA-
FROM STA 13+00 TO STA 14+10 (RT) -Y16-REV

DETAIL 41
SPECIAL LATERAL BASE DITCH
(Not to Scale)

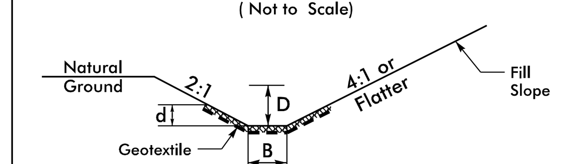

Min. D=1.5 Ft.
Max. d=1.5 Ft.
B=3.0 Ft.
Type of Liner= Class 'II' Rip-Rap

FROM STA. 19+50 TO STA. 20+50 (RT) -Y9RPA-

DETAIL 42
OUTLET CHANNEL DETAIL
NOT TO SCALE

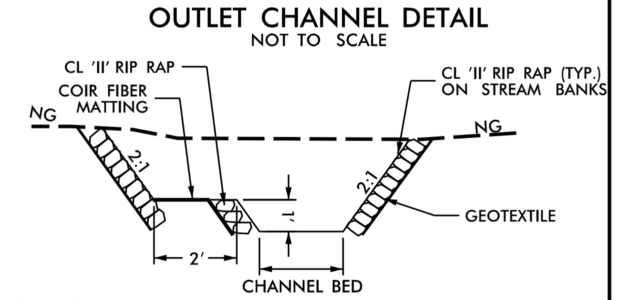

Length = 50 Ft.
Est. = 110 Tons of Class 'II' Rip-Rap, 200 SY Geotextile

STA 552+50 (LT) -L- (S=1.2%)

DETAIL 43
SPECIAL LATERAL BASE DITCH
(Not to Scale)

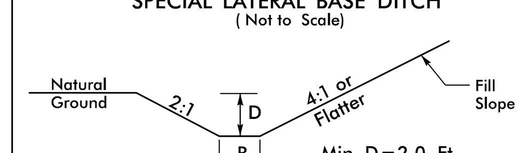

Min. D=2.0 Ft.
B=2.0 Ft.

FROM STA 47+15 TO STA 50+00 (RT) -Y14-

DETAIL 44
TOE PROTECTION
(Not to Scale)

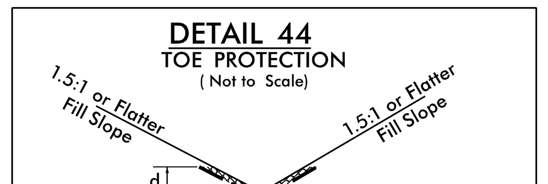

d=1.0 Ft.
Type of Liner= Class B Rip-Rap

FROM STA 10+40 TO STA 16+60 (LT) -DR4-

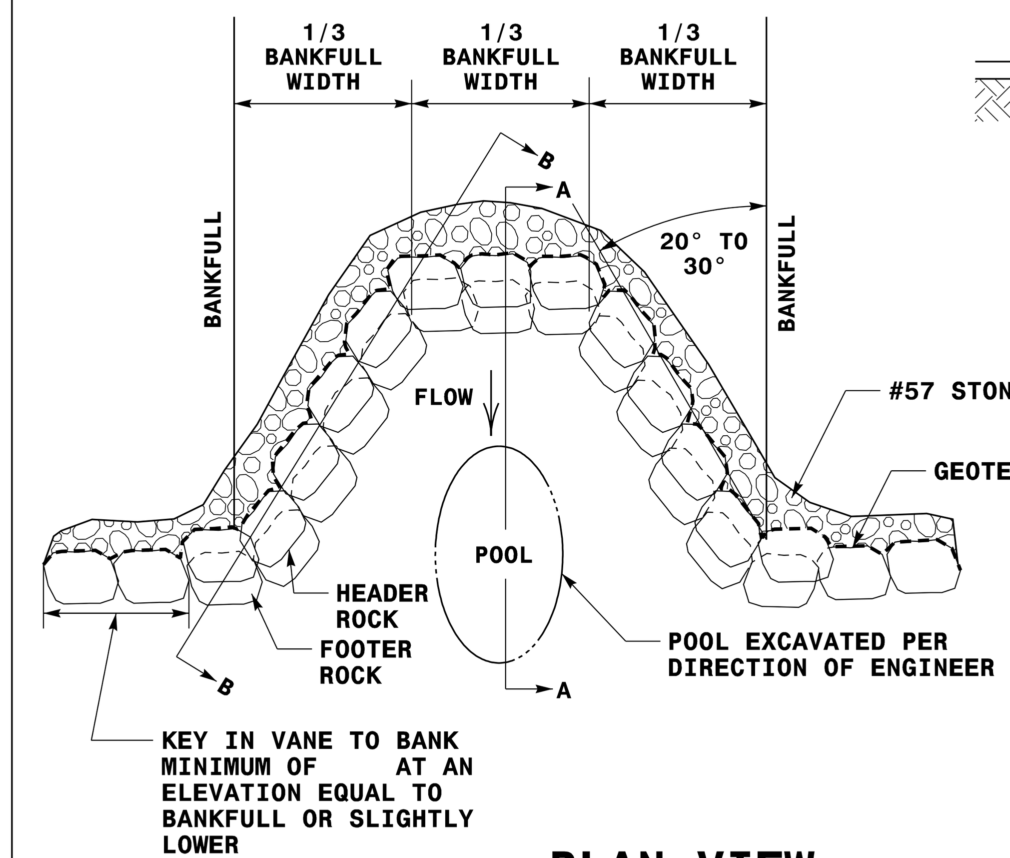

PLAN VIEW

	BOULDER DIMENSIONS (FT)		
STATION	HEIGHT	LENGTH	WIDTH
438+60	2.0'	3.0'	2.0'

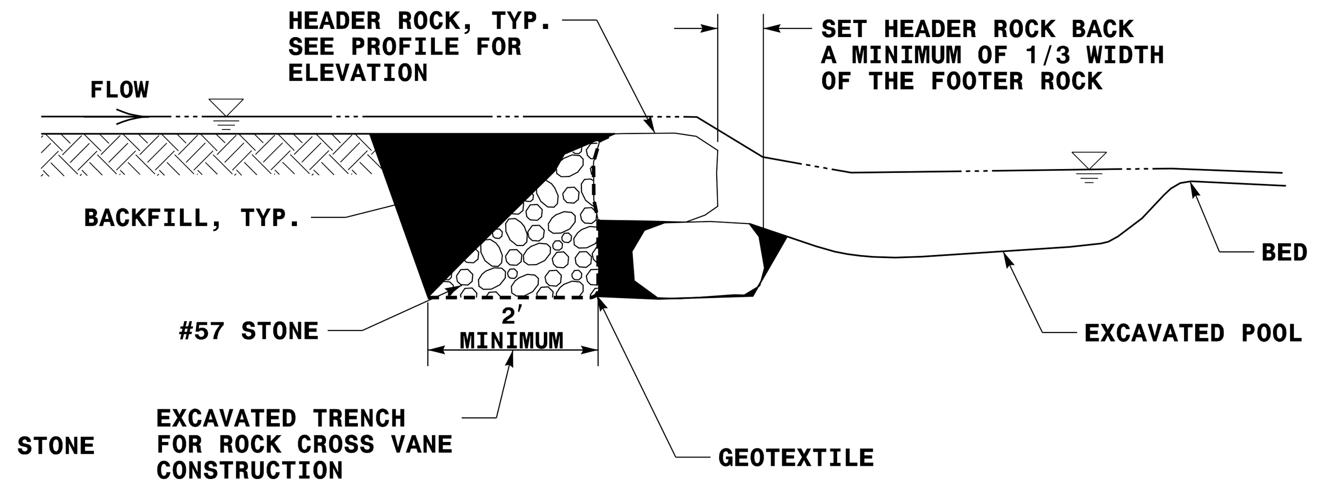

SECTION A-A

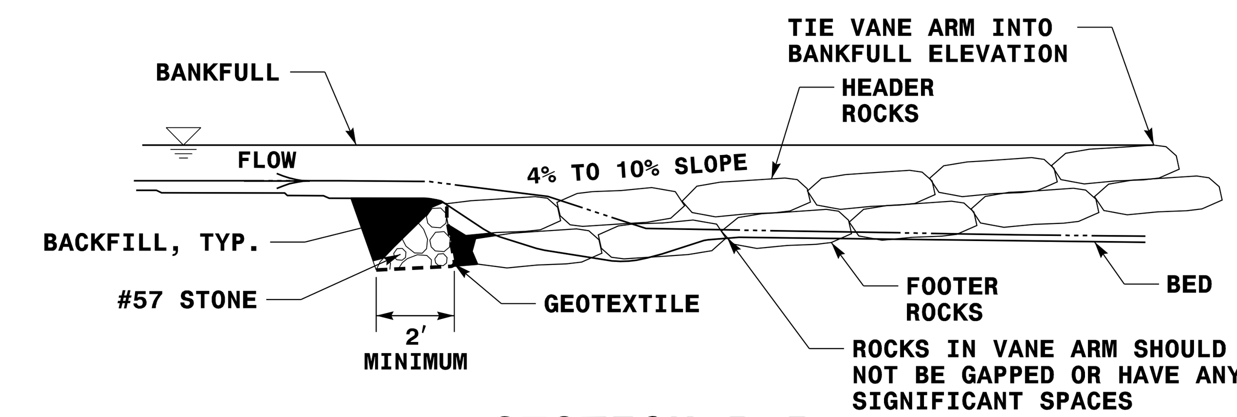

SECTION B-B

ROCK CROSS VANE DETAIL
NOT TO SCALE

NOTES:
1) DEEPEST PART OF POOL TO BE IN LINE WITH WHERE VANE ARM TIES INTO BANKFULL.
2) DO NOT EXCAVATE POOL TOO CLOSE TO FOOTER BOULDERS.
3) CLASS "A" STONE CAN BE USED TO REDUCE VOIDS BETWEEN HEADERS AND FOOTERS.
4) COMPACT BACKFILL TO EXTENT POSSIBLE OR AT THE DIRECTION OF THE ENGINEER.
5) POOL DEPTH SHOULD BE 2 TO 3 TIMES BANKFULL DEPTH.

DETAIL #45
REMOVABLE ORIFICE TRASH RACK
NOT TO SCALE

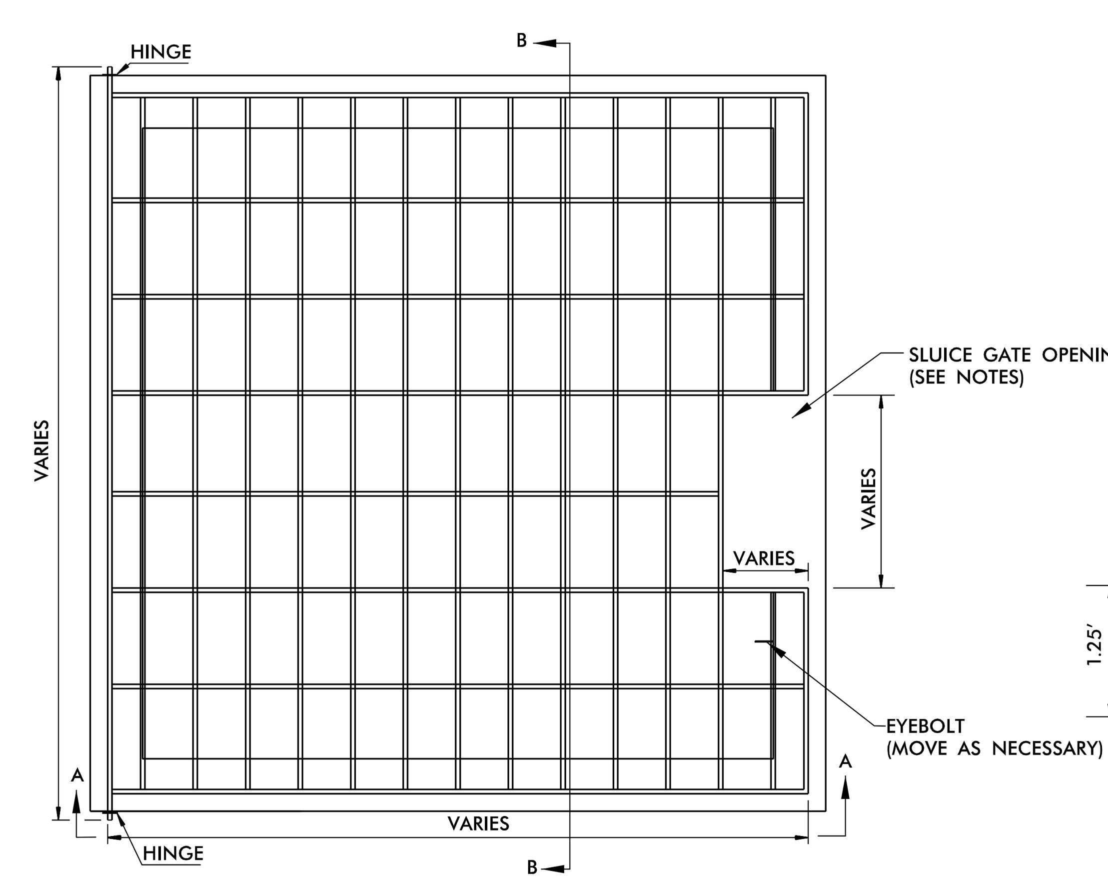

PLAN

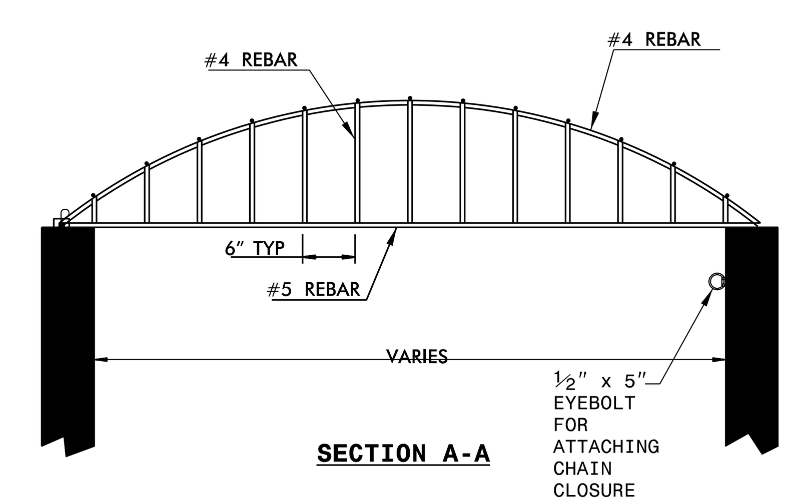

SECTION A-A

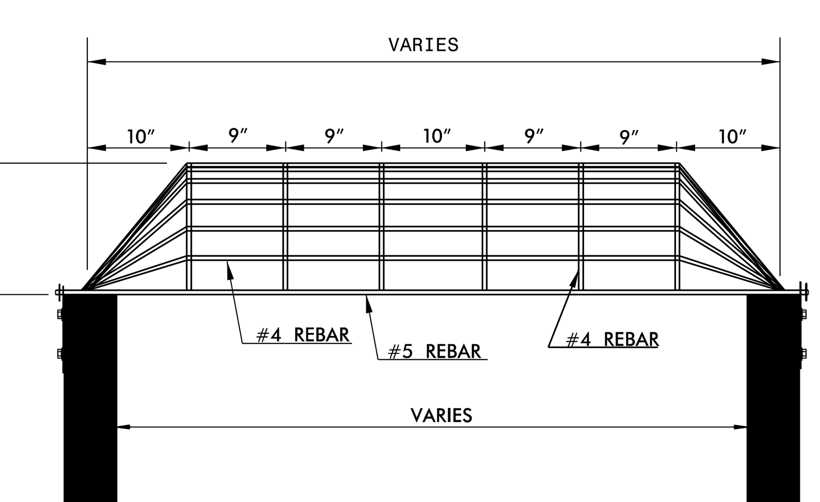

SECTION B-B

REBAR TRASH RACK
NOT TO SCALE

RISER TRASH RACK NOTES:
1. ALL JOINTS SHALL BE FULLY WELDED AROUND JOINT WITH A MINIMUM OF A 1/4" BEAD.
2. IF BOLTS ARE ANCHORED IN CONCRETE, FOLLOW STD. DWG. 862.03 AND 862.04 FOR ANCHORING PROCEDURE.
3. EYEBOLT FOR CHAIN CLOSURE SHALL BE INSTALLED BY THE SAME METHOD AS THE HINGE PLATE BOLTS.
4. RACK AND HARDWARE SHALL BE ALUMINUM OR REBAR AND GALVANIZED IN ACCORDANCE WITH ASTM A-153.
5. PROVIDE OPENING IN TRASH RACK TO ACCOMODATE SLUICE GATE ON THE OUTLET PIPE. ENSURE TRASH RACK OPENS FREELY AND WITHOUT INTERFERENCE WITH SLUICE GATES.

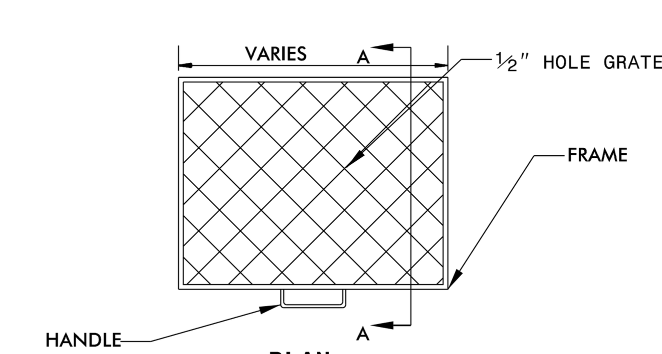

PLAN

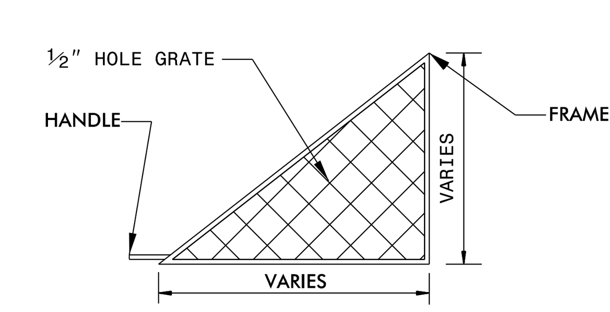

SECTION A-A

ORIFICE TRASH RACK NOTES:
1. ALL JOINTS SHALL BE FULLY WELDED AROUND JOINT WITH A MINIMUM OF A *" BEAD.
2. IF BOLTS ARE ANCHORED IN CONCRETE, FOLLOW STD. DWG. 862.03 AND 862.04 FOR ANCHORING PROCEDURE.
3. REMOVEABLE ORIFICE TRASH RACK SHALL BE ATTACHED TO CONCRETE BOX BY HINGE OR SLIDE RAIL SYSTEM.
4. RACK AND HARDWARE SHALL BE ALUMINUM OR GALVANIZED IN ACCORDANCE WITH ASTM A-153.