5/14/99

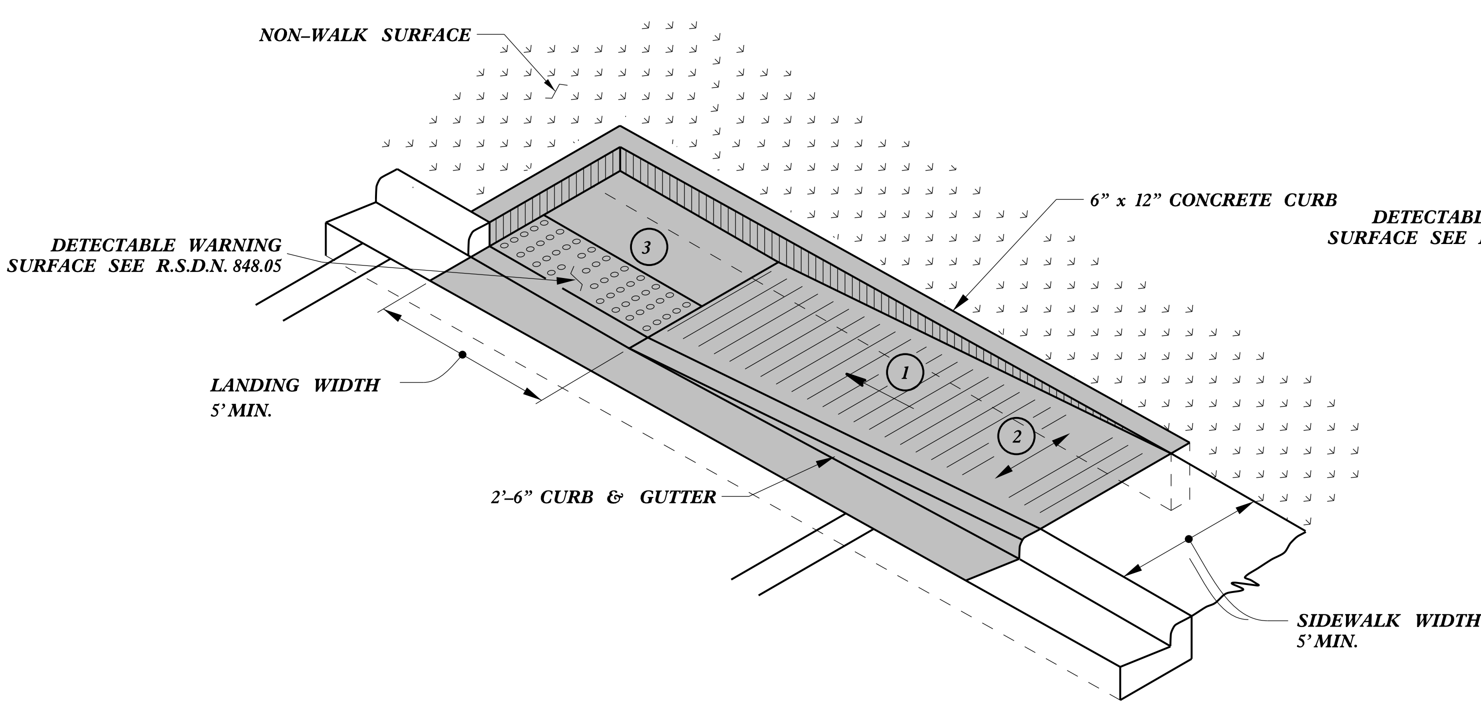


TYPE 1A

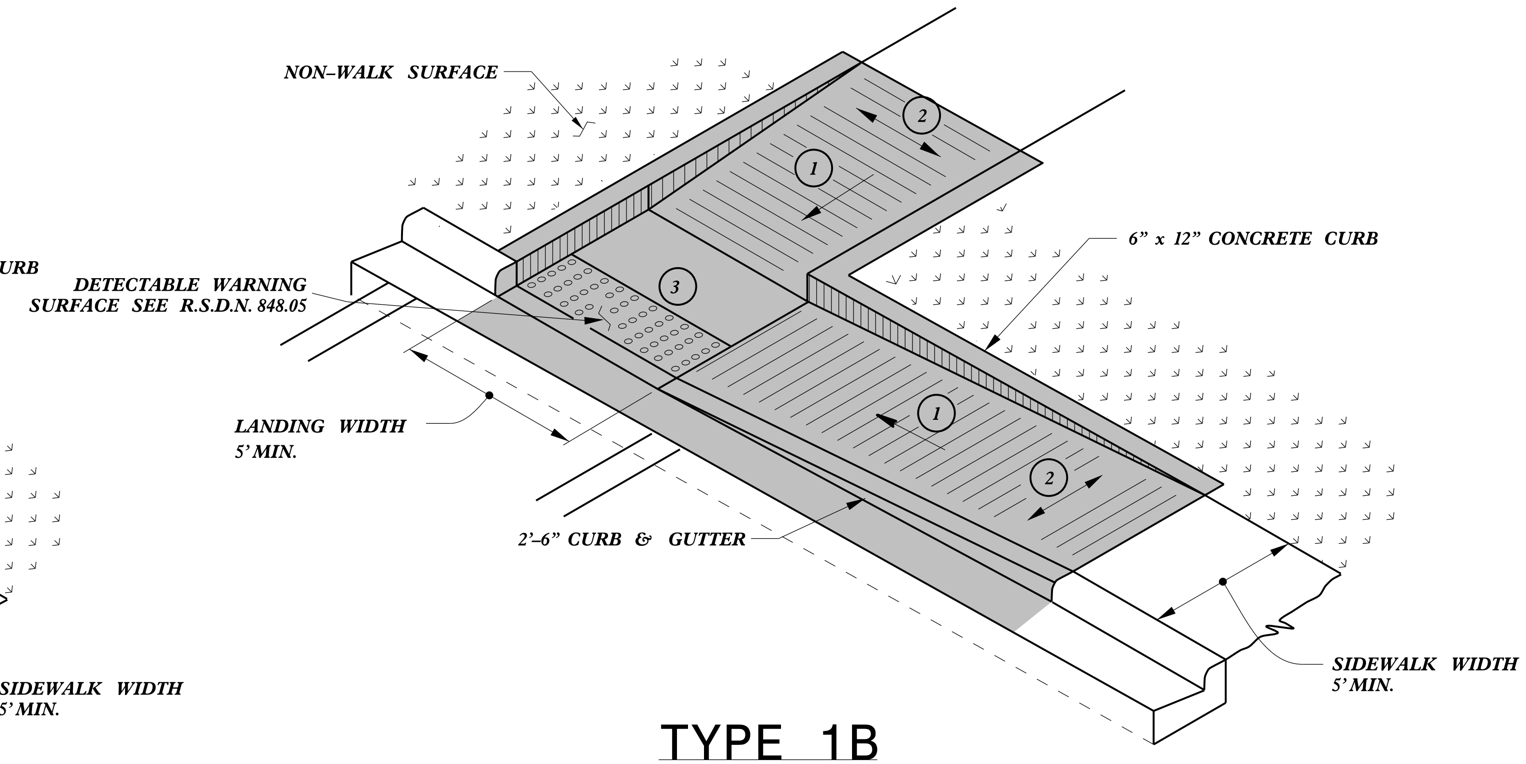


TYPE 1B

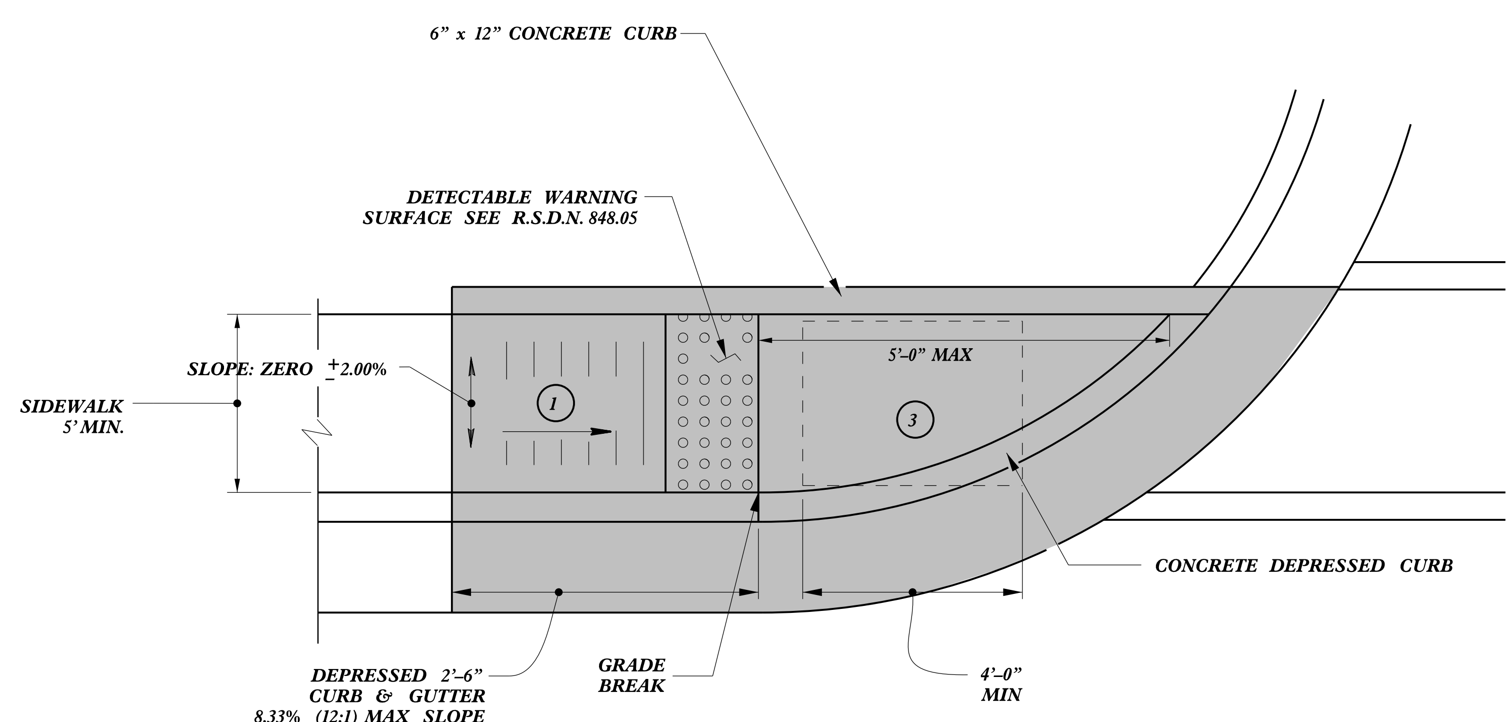


TYPE 1

PAY LIMITS FOR 1 CURB RAMP

1. *8.33% (12:1) MAX RAMP SLOPE*
2. *CROSS SLOPE: 2.00%*
3. *CURB RAMPS REQUIRE A (4'–0") MINIMUM LANDING WITH A MAXIMUM CROSS SLOPE AND LONGITUDINAL SLOPE OF 2.00% WHERE PEDESTRIANS PERFORM TURNING MANEUVERS. SLOPE TO DRAIN TO CURB.*

*REFER TO ROADWAY STANDARD DRAWING NUMBER 848.05 SHEET 3 OF 3 FOR ALL RAMP NOTES*

NORTH CAROLINA PROFESSIONAL SEAL 022966 ENGINEER Joel S. Howerton

DocuSigned by: Joel S Howerton

449E8E25522144F...

11/18/2015

DOCUMENT NOT CONSIDERED FINAL UNLESS ALL SIGNATURES COMPLETED

CONTRACT STANDARDS AND DEVELOPMENT UNIT
Office 919-707-6950 FAX 919-250-4119

# CURB RAMPS

Directional Ramps

ORIGINAL BY: J.S. HOWERTON DATE: 7/7/11
MODIFIED BY: ______ DATE: ______
CHECKED BY: ______ DATE: ______
FILE SPEC.: stds/2012CurbRamp/CurbRampDetails.dgn

$$$$$$SYSTIME$$$$$
$$$$$$$$$$DGN$$$$$$$$$$$$$$$$
$$$$USERNAME$$$$