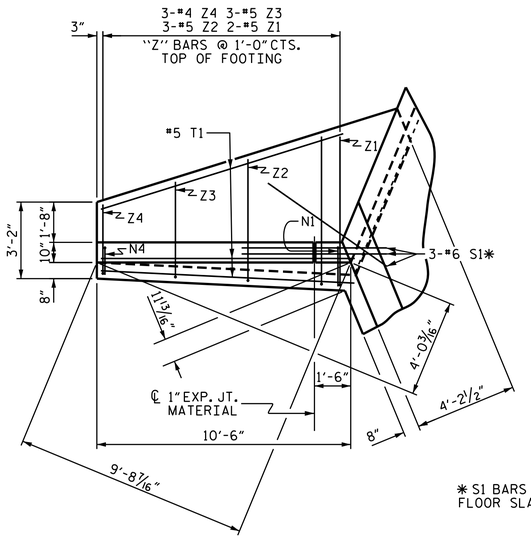

✱ S1 BARS @ BOTTOM OF FLOOR SLAB & FOOTING

PLAN W2

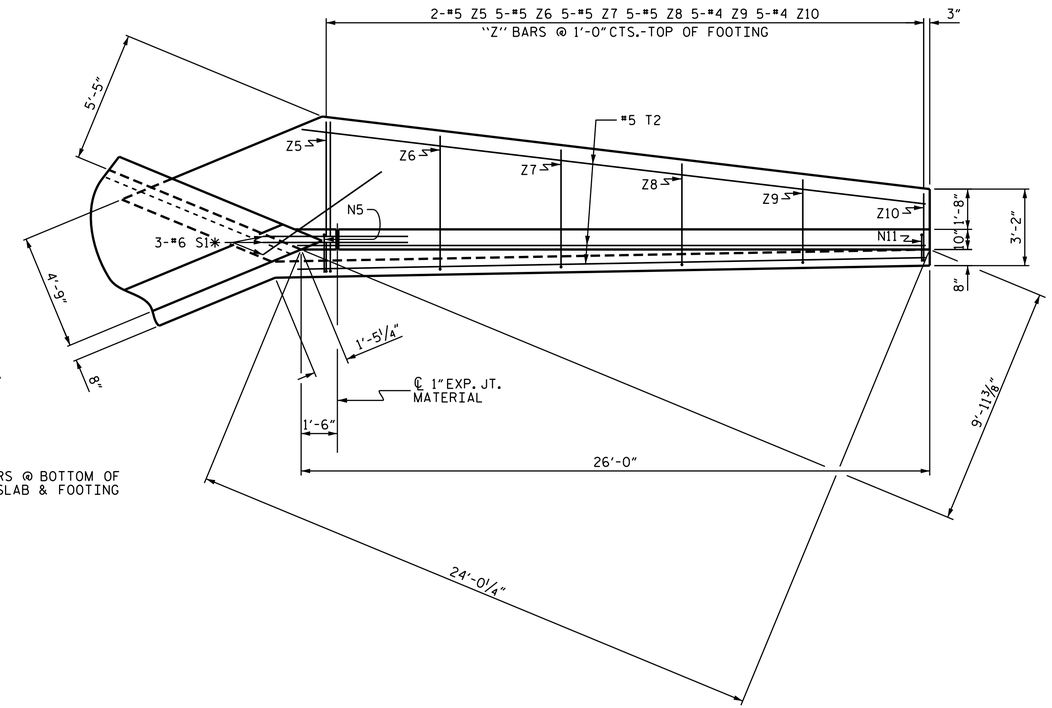

PLAN W1

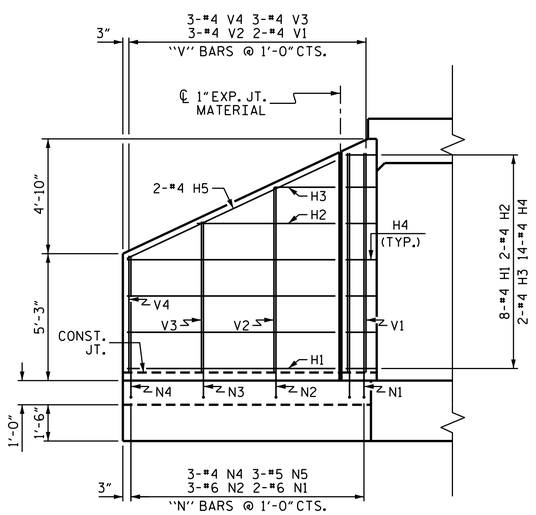

ELEVATION W2

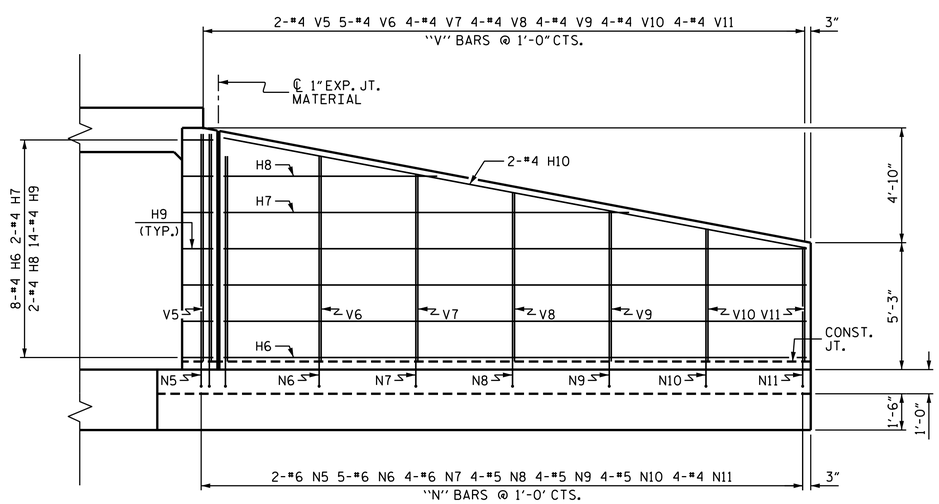

ELEVATION W1

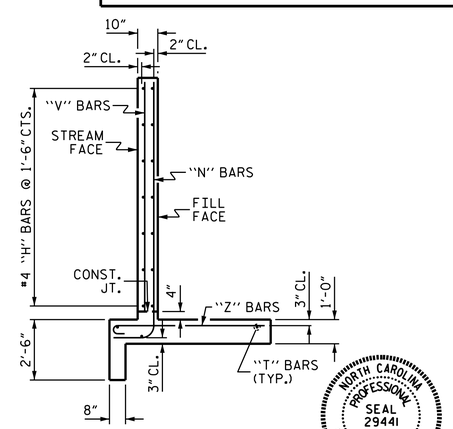

TYPICAL WING SECTION

BAR TYPES

ALL BAR DIMENSIONS ARE OUT TO OUT.

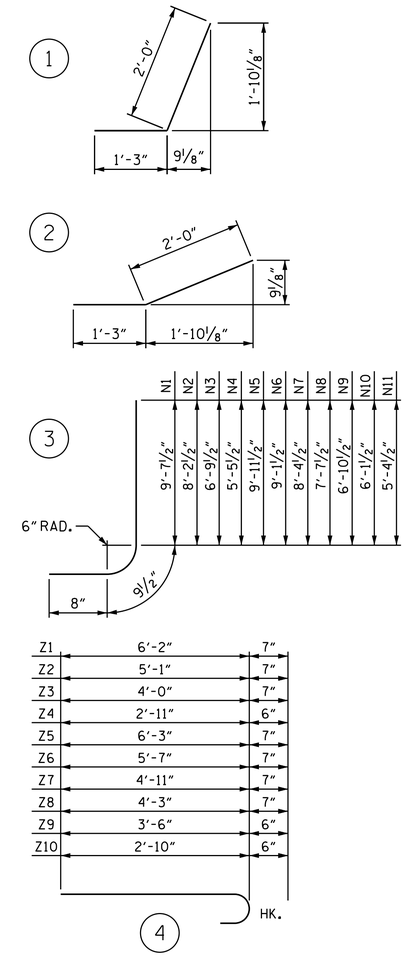

BILL OF MATERIAL

BAR	NO.	SIZE	TYPE	LENGTH	WEIGHT
H1	16	#4	STR	8'-7"	92
H2	4	#4	STR	5'-8"	15
H3	4	#4	STR	2'-6"	7
H4	28	#4	1	3'-3"	61
H5	4	#4	STR	9'-6"	25
H6	16	#4	STR	24'-1"	257
H7	4	#4	STR	16'-9"	45
H8	4	#4	STR	8'-10"	24
H9	28	#4	2	3'-3"	61
H10	4	#4	STR	24'-6"	65
N1	4	#6	3	11'-1"	67
N2	6	#6	3	9'-8"	87
N3	6	#5	3	8'-3"	52
N4	6	#4	3	6'-11"	28
N5	4	#6	3	11'-5"	69
N6	10	#6	3	10'-7"	159
N7	8	#6	3	9'-10"	118
N8	8	#5	3	9'-1"	76
N9	8	#5	3	8'-4"	70
N10	8	#5	3	7'-7"	63
N11	8	#4	3	6'-10"	37
S1	12	#6	STR	6'-0"	108
T1	6	#5	STR	10'-6"	66
T2	6	#5	STR	26'-0"	163
V1	4	#4	STR	9'-1"	24
V2	6	#4	STR	7'-8"	31
V3	6	#4	STR	6'-3"	25
V4	6	#4	STR	4'-10"	19
V5	4	#4	STR	9'-5"	25
V6	10	#4	STR	8'-6"	57
V7	8	#4	STR	7'-9"	41
V8	8	#4	STR	7'-0"	37
V9	8	#4	STR	6'-3"	33
V10	8	#4	STR	5'-6"	29
V11	8	#4	STR	4'-9"	25
Z1	4	#5	4	6'-9"	28
Z2	6	#5	4	5'-8"	35
Z3	6	#5	4	4'-7"	29
Z4	6	#4	4	3'-5"	14
Z5	4	#5	4	6'-10"	29
Z6	10	#5	4	6'-2"	64
Z7	10	#5	4	5'-6"	57
Z8	10	#5	4	4'-10"	50
Z9	10	#4	4	4'-0"	27
Z10	10	#4	4	3'-4"	22

REINFORCING STEEL FOR 4 WINGS 2516 LBS

CLASS A CONCRETE

4 WINGS	36.1	CY
2 HEADWALLS	4.7	CY
2 END CURTAIN WALLS	5.7	CY
TOTAL	46.5	CY

PROJECT NO. U-3109A

ALAMANCE COUNTY

STATION: 96+88.00 -L-

SHEET 4 OF 5

STATE OF NORTH CAROLINA
DEPARTMENT OF TRANSPORTATION
RALEIGH

STANDARD WINGS FOR CONCRETE BOX CULVERT

H = 9'-0" SLOPE = 2:1

135° SKEW

NORTH CAROLINA PROFESSIONAL SEAL 29441 ENGINEER KRISTY W. ALFORD

DocuSigned by: F2458389308F40E...

3/16/2017

DOCUMENT NOT CONSIDERED FINAL UNLESS ALL SIGNATURES COMPLETED

ASSEMBLED BY :	A. SORSENGINH	DATE :	4/2014
CHECKED BY :	S. B. WILLIAMS	DATE :	4/2014
DRAWN BY :	CCJ		01/00
CHECKED BY :	RWW		03/00

REVISIONS

NO.	BY:	DATE:	NO.	BY:	DATE:
1			3		
2			4		

SHEET NO. C1-4

TOTAL SHEETS 5

STD. NO. CW4509