DocuSign Envelope ID: 335FBBA3-7647-46B4-90F1-0251969B9460

1/6/2017 8:11:15 AM G:\Projects\2014\U-3109A\Structures\Site 2\Site 2-Str 3 Bridge 435 (NBL)\Drawings\Final\403_U3109A_smu_eb2.dgn

NOTES:

STIRRUPS AND "U" BARS IN CAP MAY BE SHIFTED AS NECESSARY TO CLEAR ANCHOR BOLTS.

BACKWALL SHALL BE PLACED BEFORE APPLYING THE EPOXY PROTECTIVE COATING.

THE TOP SURFACE AREAS OF THE END BENT CAPS SHALL BE CURED IN ACCORDANCE WITH THE STANDARD SPECIFICATIONS EXCEPT THE MEMBRANE CURING COMPOUND METHOD SHALL NOT BE USED.

THE TOP SURFACE OF THE CAP EXCEPT THE BRIDGE SEAT BUILDUPS SHALL BE SLOPED TRANSVERSELY FROM THE FILL FACE TO THE BACK FACE AT THE RATE OF 2%.

SEE GENERAL DRAWING "FOUNDATION LAYOUT" FOR ADDITIONAL NOTES FOR DRIVING PILES.

▲ FOR LOCATION OF ELEVATIONS BETWEEN BRIDGE SEAT BUILD-UPS, SEE SECTIONS A-A AND B-B SHEET 3 OF 3.

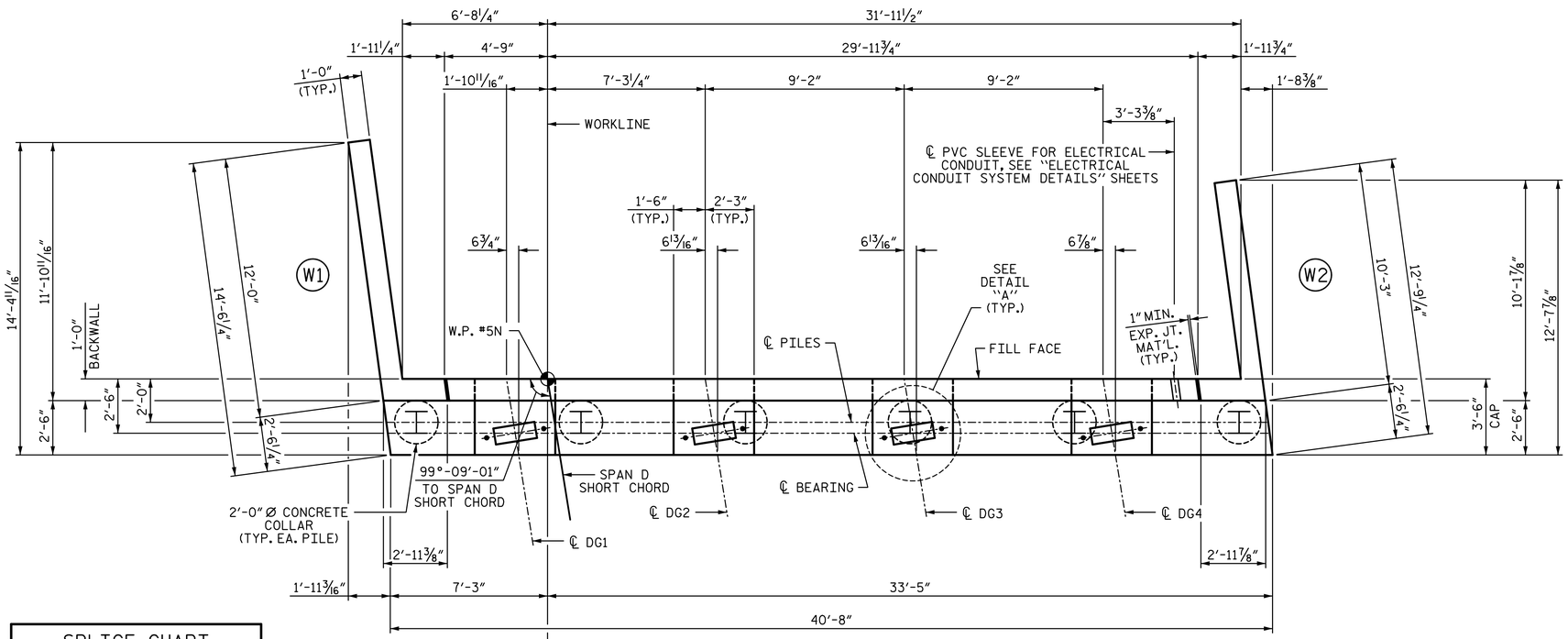

PLAN

SPLICE CHART

#4 B3 SPLICE LENGTH = 2'-5"
#5 B5 SPLICE LENGTH = 3'-0"
#9 B6 SPLICE LENGTH = 12'-6"
#4 K1 SPLICE LENGTH = 2'-5"

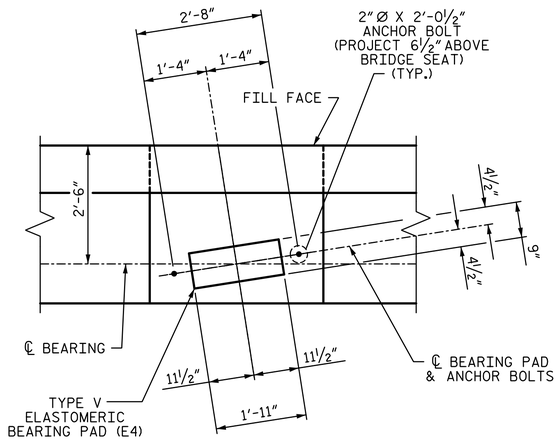

DETAIL "A"

(TYP. EA. GIRDER)

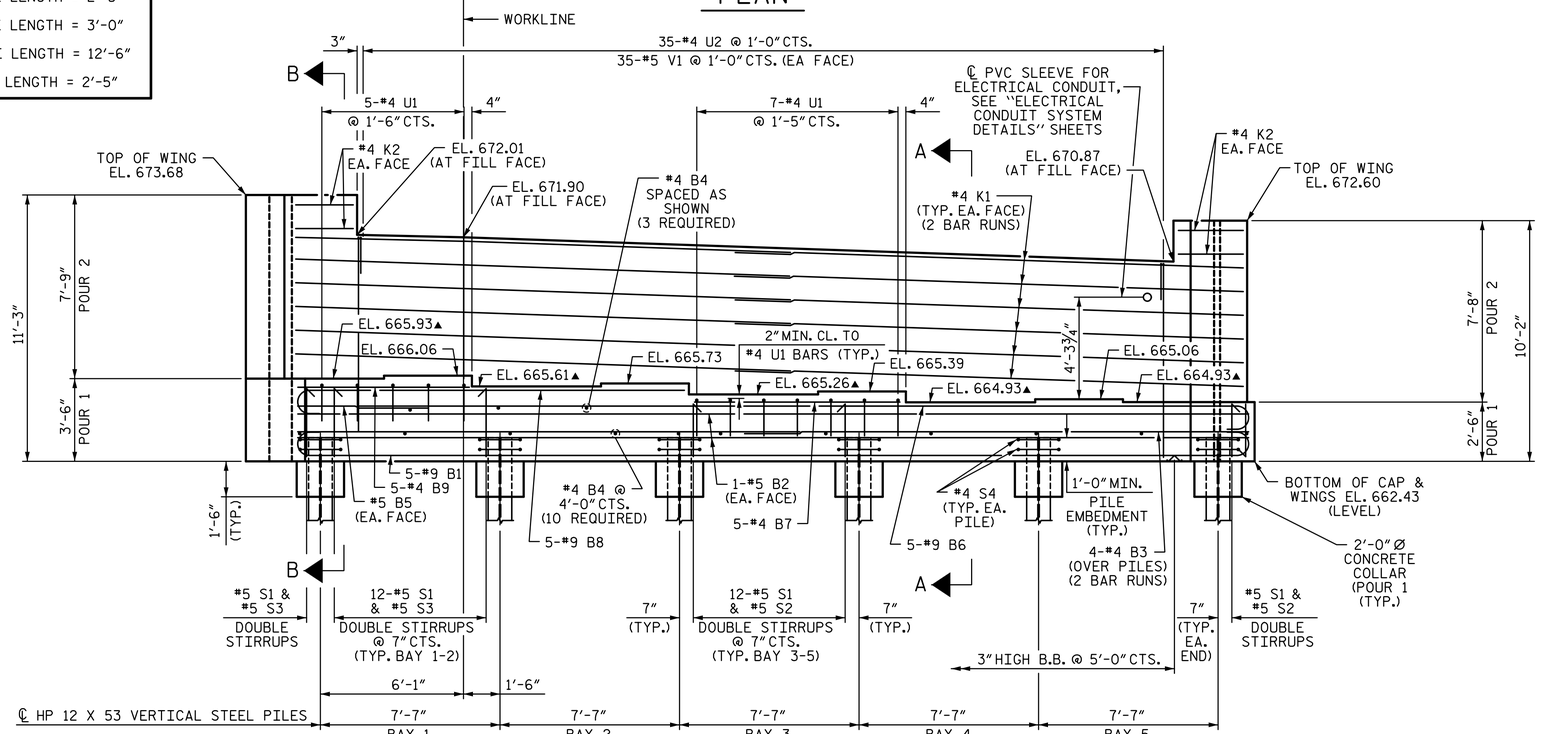

ELEVATION

PROJECT NO. U-3109A

ALAMANCE COUNTY

STATION: 146+61.35 -L-

SHEET 1 OF 3

STATE OF NORTH CAROLINA
DEPARTMENT OF TRANSPORTATION
RALEIGH

SUBSTRUCTURE

END BENT 2

(NBL)

REVISIONS								SHEET NO.
NO.	BY:	DATE:	NO.	BY:	DATE:			S03-45
1			3					TOTAL SHEETS
2			4					S03-53

STR. #3

PLANS PREPARED BY:

SIMPSON ENGINEERS & ASSOCIATES
5640 Dillard Drive
Suite 200
Cary, NC 27518
(919) 852-0468
(919) 852-0598 (Fax)
www.simpsonengr.com
LICENSURE NO. C-2521

NORTH CAROLINA PROFESSIONAL SEAL ENGINEER JOHN A. BATTS 18006
DocuSigned by: John A. Batts
1/6/2017

DRAWN BY:	S.D. COOPER	DATE:	9-15
CHECKED BY:	J.A. BATTS	DATE:	9-15
DESIGN ENGINEER OF RECORD:	J.A. BATTS	DATE:	9-15