DocuSign Envelope ID: E40BCD6D-27FC-46CB-BDD6-0B2B1C18F581

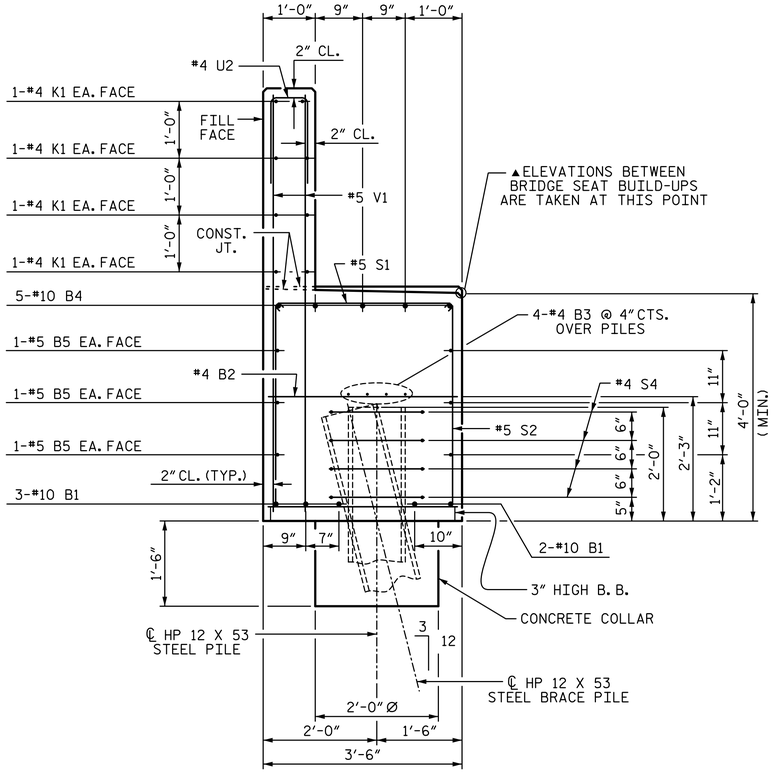

▲ELEVATIONS BETWEEN BRIDGE SEAT BUILD-UPS ARE TAKEN AT THIS POINT

SECTION A-A

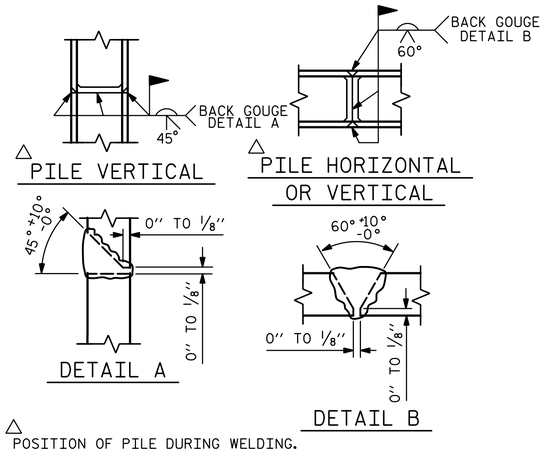

△ POSITION OF PILE DURING WELDING.

PILE SPLICE DETAILS

BAR TYPES

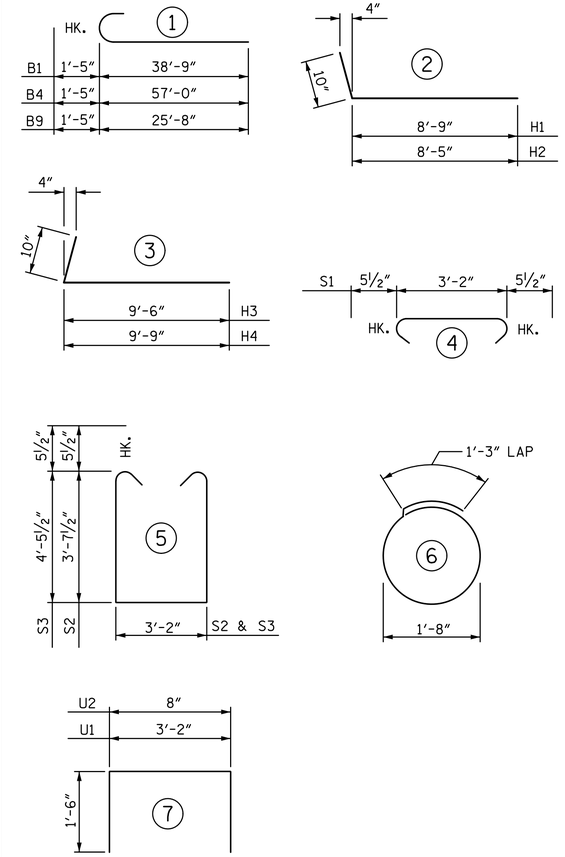

ALL BAR DIMENSIONS ARE OUT TO OUT

BILL OF MATERIAL

END BENT 1

BAR	NO.	SIZE	TYPE	LENGTH	WEIGHT
B1	10	10	1	40'-2"	1728
B2	12	4	STR	24'-10"	199
B3	21	4	STR	3'-2"	44
B4	5	10	1	58'-5"	1257
B5	12	5	STR	36'-4"	455
B6	15	4	STR	2'-4"	23
B7	10	4	STR	9'-0"	60
B8	2	5	STR	15'-8"	33
B9	5	10	1	27'-1"	583
H1	13	5	2	9'-7"	130
H2	13	5	2	9'-3"	125
H3	14	5	3	10'-4"	151
H4	14	5	3	10'-7"	155
K1	24	4	STR	24'-10"	398
K2	8	4	STR	2'-10"	15
S1	65	5	4	4'-1"	277
S2	40	5	5	11'-4"	473
S3	25	5	5	13'-0"	339
S4	32	4	6	6'-6"	139
U1	21	4	7	6'-2"	87
U2	64	4	7	3'-8"	157
V1	128	5	STR	7'-2"	957
V2	26	4	STR	8'-6"	148
V3	28	5	STR	9'-10"	287

TOTAL REINFORCING STEEL 8220 LB

CLASS "A" CONCRETE BREAKDOWN

POUR 1
(CAP, COLLARS, & LOWER WINGS) 45.7 CY

POUR 2
(BACKWALL AND UPPER WINGS) 12.9 CY

TOTAL CLASS "A" CONCRETE 58.6 CY

HP 12 X 53 STEEL PILES
NO. 8 400 LF

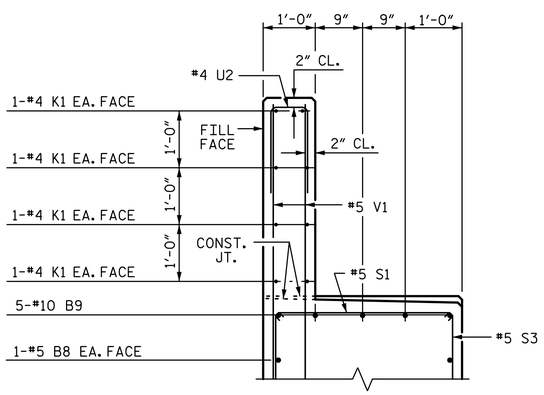

SECTION B-B

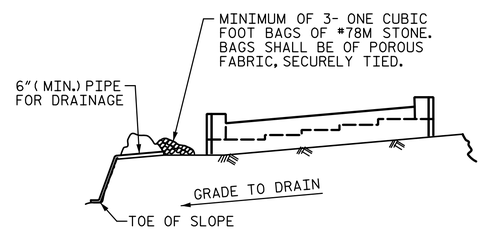

BAGGED STONE AND PIPE SHALL BE PLACED IMMEDIATELY AFTER COMPLETION OF END BENT EXCAVATION. PIPE MAY BE EITHER CONCRETE, CORRUGATED STEEL, CORRUGATED ALUMINUM ALLOY, OR CORRUGATED PLASTIC. PERFORATED PIPE WILL NOT BE ALLOWED.

BAGGED STONE SHALL REMAIN IN PLACE UNTIL THE ENGINEER DIRECTS THAT IT BE REMOVED. THE CONTRACTOR SHALL REMOVE AND DISPOSE OF SILT ACCUMULATIONS AT BAGGED STONE WHEN SO DIRECTED BY THE ENGINEER. BAGS SHALL BE REMOVED AND REPLACED WHENEVER THE ENGINEER DETERMINES THAT THEY HAVE DETERIORATED AND LOST THEIR EFFECTIVENESS.

NO SEPARATE PAYMENT WILL BE MADE FOR THIS WORK AND THE ENTIRE COST OF THIS WORK SHALL BE INCLUDED IN THE UNIT CONTRACT PRICE BID FOR THE SEVERAL PAY ITEMS.

TEMPORARY DRAINAGE AT END BENT

PROJECT NO. U-3109A
ALAMANCE COUNTY
STATION: 26+54.73 -NBL-

SHEET 3 OF 3

STATE OF NORTH CAROLINA
DEPARTMENT OF TRANSPORTATION
RALEIGH
SUBSTRUCTURE

END BENT 1

PLANS PREPARED BY:
SIMPSON ENGINEERS & ASSOCIATES
5640 Dillard Drive
Suite 200
Cary, NC 27518
(919) 852-0468
(919) 852-0598 (Fax)
www.simpsonengr.com
LICENSURE NO. C-2521

NORTH CAROLINA PROFESSIONAL SEAL 24390 ENGINEER THEO J. BEACH
DocuSigned by: Theo Beach
2/13/2017

REVISIONS							SHEET NO.
NO.	BY:	DATE:	NO.	BY:	DATE:		S01-36
1			3				TOTAL SHEETS
2			4				S01-49

DRAWN BY: S. D. COOPER DATE: 5-15
CHECKED BY: B.S. COX DATE: 5-15
DESIGN ENGINEER OF RECORD: T.J. BEACH DATE: 5-15

2/10/2017 9:09:08 AM G:\Projects\2014\U-3109A\Structures\Site 1-Bridge 434 (NBL)\Drawings\Final\401_U3109A_SMU_EB1.dgn