PROJECT REFERENCE NO.	SHEET NO.
U-3109A	SCP.13

TMP PHASE III - FINAL

NEW AERIAL SPLICE ENCLOSURE
NC 119 AT HOLMES RD.
SIG. INV. # 07–0442

Notes:
Unused fibers left coiled and stored in splice tray.
Unused Buffer Tubes left coiled and stored in splice tray.

COLOR CODE
TIA/EIA 598–A

(1) BLUE	(7) RED
(2) ORANGE	(8) BLACK
(3) GREEN	(9) YELLOW
(4) BROWN	(10) VIOLET
(5) SLATE	(11) ROSE
(6) WHITE	(12) AQUA

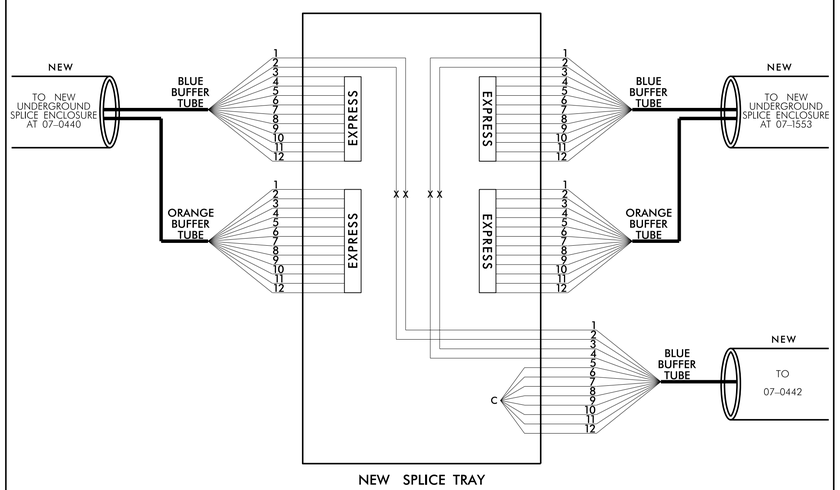

LEGEND
X = FUSION SPLICE
C = CAP IN TRAY

COLOR CODE
TIA/EIA 598–A

(1) BLUE	(7) RED
(2) ORANGE	(8) BLACK
(3) GREEN	(9) YELLOW
(4) BROWN	(10) VIOLET
(5) SLATE	(11) ROSE
(6) WHITE	(12) AQUA

CONTROLLER CABINET
NC 119 AT HOLMES RD.
SIG. INV. # 07–0442

Notes:
Unused fibers left coiled and stored in splice tray.
Unused Buffer Tubes left coiled and stored in splice tray.

LEGEND
X = FUSION SPLICE
C = CAP IN TRAY

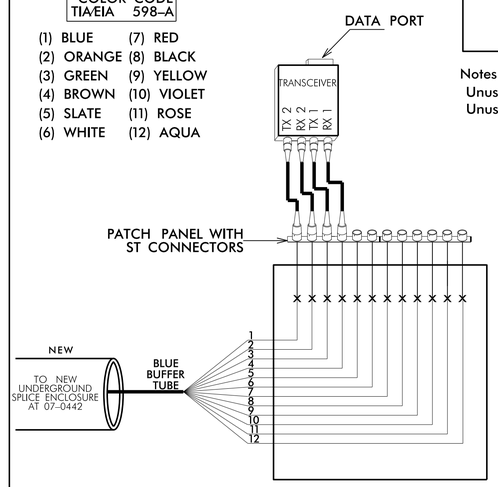

1) TRANSCEIVER TERMINATION CONFIGURATIONS ARE GENERIC. CONTRACTOR IS RESPONSIBLE FOR DETERMINING \ ENSURING PROPER TERMINATIONS.

2) INCLUDE ON THE COVER OF EACH SPLICE TRAY THE FOLLOWING:
REFERENCE SECTION 1731 "FIBER OPTIC SPLICE ENCLOSURE"

1) SPLICE LOCATION
2) DATE
3) COMPANY NAME
4) NAME OF INDIVIDUAL PERFORMING THE SPLICING

PRIOR TO INSTALLING THE COVER ON THE SPLICE TRAY TAKE A DIGITAL PHOTOGRAPH SHOWING THE SPLICE TRAY AND INFORMATION SHOWN ABOVE (1–4) AND SUBMIT PHOTOGRAPH ALONG WITH OTDR TEST RESULTS.

TMP PHASE III - FINAL

DOCUMENT NOT CONSIDERED FINAL UNLESS ALL SIGNATURES COMPLETED

Prepared in the Offices of:

750 N. Greenfield Pkwy. , Garner, NC 27529

SPLICE DETAIL

DIVISION 07 ALAMANCE COUNTY MEBANE

PLAN DATE: JANUARY 2017 REVIEWED BY: DocuSigned by: Mil Avery 09F5DB4CBED3443...

PREPARED BY: A. J. SKUCE

REVISIONS	INIT.	DATE

SEAL

NORTH CAROLINA PROFESSIONAL SEAL 023919 ENGINEER GREGORY A. FULLER

DocuSigned by: Gregory A. Fuller 7032CA0AEE874FF... 1/27/2017

DATE