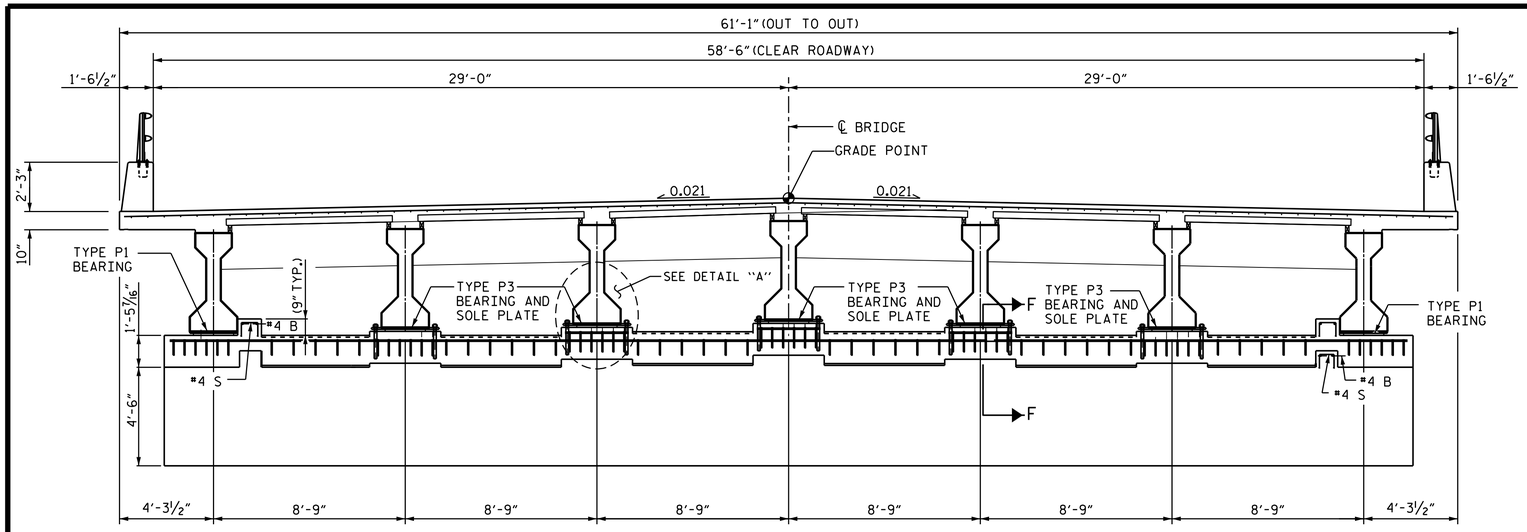

PART PLAN ELEVATION AT BENT 26

FIXED END SPAN 25 OR 26

(EXISTING REINFORCING SHOWN)

NOTES

AT ALL FIXED POINTS OF SUPPORT, NUTS FOR ANCHOR BOLTS ARE TO BE TIGHTENED FINGER TIGHT AND THEN BACKED OFF ½ TURN. THE THREAD OF THE NUT AND BOLT SHALL THEN BE BURRED WITH A SHARP POINTED TOOL.

ANCHOR BOLT LENGTHS HAVE BEEN ASSUMED ON THE BASIS OF A 15" MINIMUM EMBEDMENT IN EXISTING CONCRETE CAPS. THIS EMBEDMENT REQUIREMENT MAY BE REDUCED TO BE IN COMPLIANCE WITH MINIMUM EMBEDMENT SPECIFIED BY THE MANUFACTURER OF THE EPOXY ADHESIVE BONDING SYSTEM.

PRIOR TO WELDING, GRIND THE GALVANIZED SURFACE OF THE PORTION OF THE EMBEDDED PLATE AND SOLE PLATE THAT ARE TO BE WELDED. AFTER WELDING, DAMAGED GALVANIZED SURFACES SHALL BE REPAIRED IN ACCORDANCE WITH THE STANDARD SPECIFICATIONS.

WHEN WELDING THE SOLE PLATE TO THE EMBEDDED PLATE IN THE GIRDER, USE TEMPERATURE INDICATING WAX PENS, OR OTHER SUITABLE MEANS, TO ENSURE THAT THE TEMPERATURE OF THE SOLE PLATE DOES NOT EXCEED 300°F. TEMPERATURES ABOVE THIS MAY DAMAGE THE ELASTOMER.

ANCHOR BOLTS SHALL MEET THE REQUIREMENTS OF ASTM A449. NUTS SHALL MEET THE REQUIREMENTS OF AASHTO M291-DH OR AASHTO M292-2H. WASHERS SHALL MEET THE REQUIREMENTS OF AASHTO M293. SHOP DRAWINGS ARE NOT REQUIRED FOR ANCHOR BOLT, NUTS AND WASHERS. SHOP INSPECTION IS REQUIRED.

ALL SURFACES OF BEARING PLATES SHALL BE SMOOTH AND STRAIGHT.

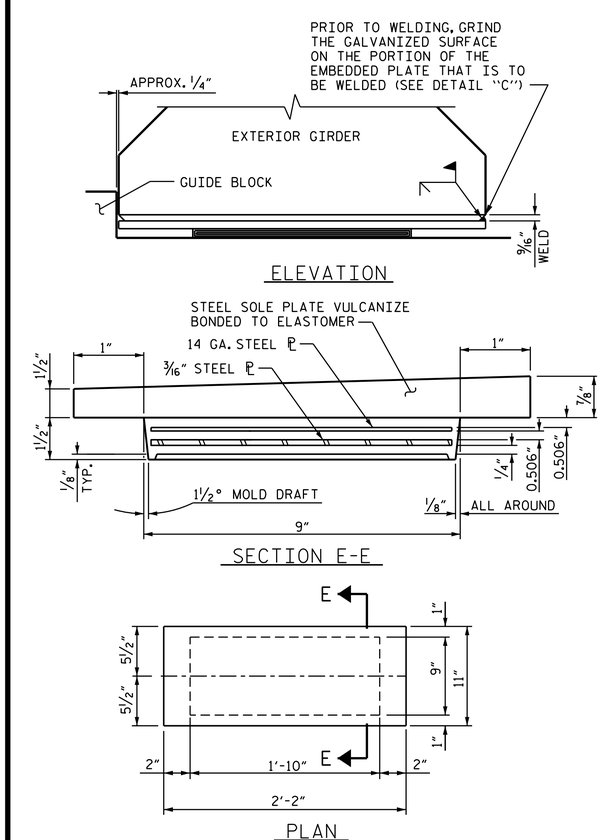

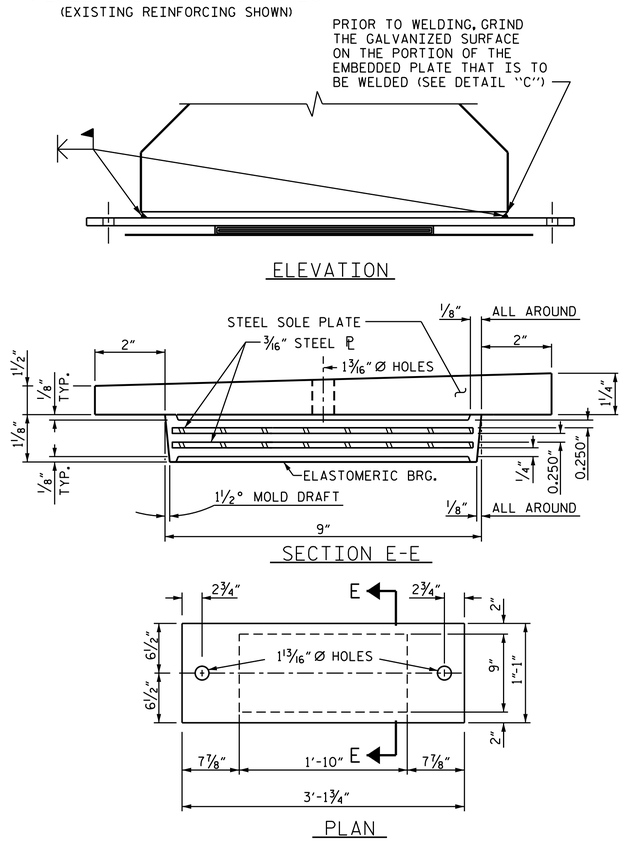

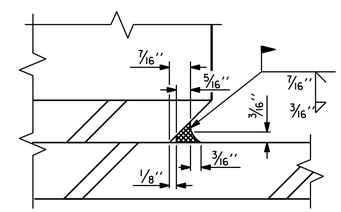

DETAIL "C"

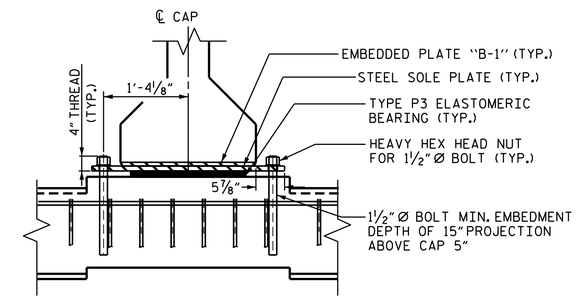

DETAIL "A"

✱✱✱ PLATE, BOLT, AND BEARING MAY BE SHIFTED SLIGHTLY AS NECESSARY TO CLEAR REINFORCING STEEL

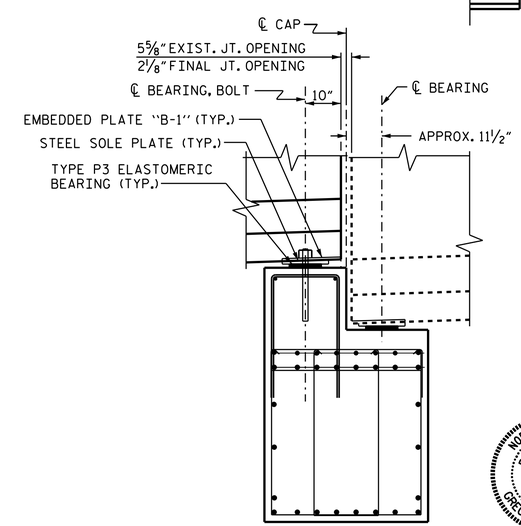

SECTION F-F @ BENT 26

(GIRDERS 2-6)

PROJECT NO. B-5938
COUNTY: CARTERET
BRIDGE NO. 68
SHEET 6 OF 6

STATE OF NORTH CAROLINA
DEPARTMENT OF TRANSPORTATION
RALEIGH

SPAN RE-POSITIONING

BEARING REPLACEMENT

NORTH CAROLINA PROFESSIONAL SEAL 21271 ENGINEER GREGORY W. DICKEY

DocuSigned by: Greg Dickey 2/22/2017

DRAWN BY: WJ HARRIS DATE : JAN. 2017
CHECKED BY: GW DICKEY DATE : JAN. 2017

DOCUMENT NOT CONSIDERED FINAL UNLESS ALL SIGNATURES COMPLETED

REVISIONS						SHEET NO.
NO.	BY	DATE	NO.	BY	DATE	S1-14
1			3			TOTAL SHEETS
2			4			-