DocuSign Envelope ID: 214772DA-B94B-4FDA-AC6C-F5CCF06BD3D7

PROJECT REFERENCE NO.	SHEET NO.
U-4715B	FS 4.50

SPLICE ENCLOSURE NO.

S14-4

SEE: CRP-6.161

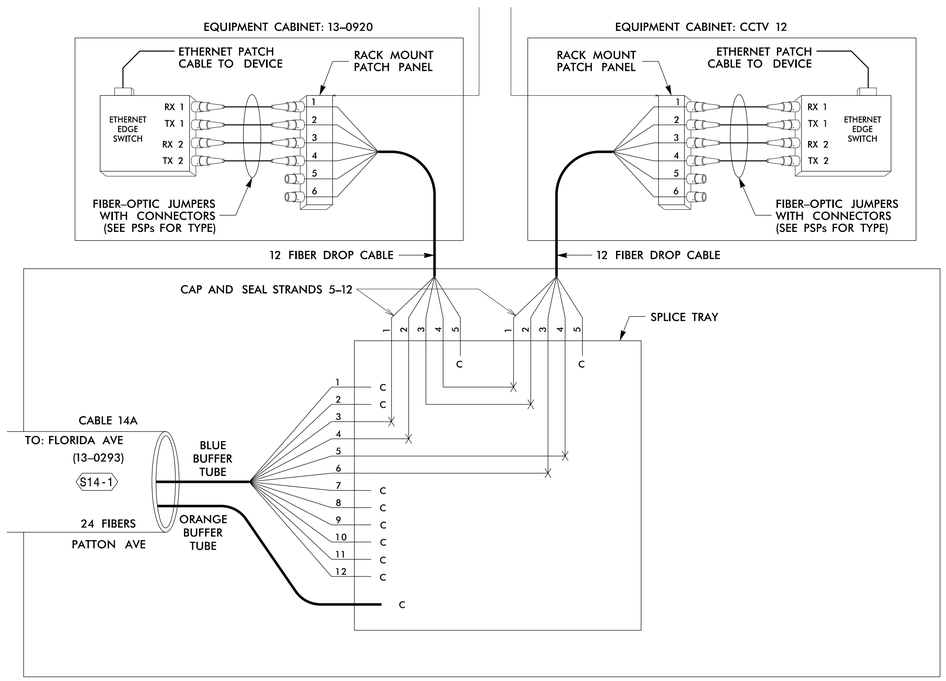

LEGEND

COLOR CODE TIA/EIA 598-B	
(1) BLUE	(7) RED
(2) ORANGE	(8) BLACK
(3) GREEN	(9) YELLOW
(4) BROWN	(10) VIOLET
(5) SLATE	(11) ROSE
(6) WHITE	(12) AQUA

X = FUSION SPLICE INDIVIDUAL FIBER

C = CAP AND SEAL

EXPRESS = EXPRESS ENTIRE BUFFER TUBE /FIBERS THROUGH WITHOUT CUTTING

BUFFER SPLICE = SPLICE ALL FIBERS IN BUFFER TUBE COLOR TO COLOR

NOTES

1. UNUSED FIBERS LEFT COILED AND STORED IN SPLICE TRAY
2. UNUSED BUFFER TUBES LEFT COILED AND STORED IN SPLICE ENCLOSURE
3. EDGE SWITCH CONFIGURATIONS ARE GENERIC. CONTRACTOR IS RESPONSIBLE FOR DETERMINING/ENSURING THE PROPER TERMINATIONS.

ATKINS 1616 EAST MILLBROOK ROAD, SUITE 310
RALEIGH, NORTH CAROLINA 27609
(919) 876-6888 NCBEES #F-0326

DOCUMENT NOT CONSIDERED FINAL UNLESS ALL SIGNATURES COMPLETED

Prepared for the Offices of:

NC Transportation

750 Greenfield Parkway, Garner, NC 27529

Asheville Signal System
Fiber-Optic Splicing Details

Division 13 Buncombe County Asheville

PLAN DATE: December 2016	REVIEWED BY: HA Badgett
PREPARED BY: AM Quigley	REVIEWED BY: JT Brooks

SCALE	REVISIONS	INIT.	DATE
NTS			

SEAL

NORTH CAROLINA PROFESSIONAL SEAL 019962 ENGINEER HENRY ALFRED BADGETT III

DocuSigned by: Henry Alfred Badgett III 1/17/2017
SIGNATURE DATE

CADD Filename: 271_092_U-4715B_FS-4.50.dgn

17-JAN-2017 15:06
D:\Transportation\Traffic\Curr\10004863\2 U-4715B Asheville Sig Sys\Task 11 Comms\Final Microstation Files (Renamed, Merged)\Volume 2\271_092_U-4715B_FS-4.50.dgn
QUICKSIGS AT LUSSSIGS