DocuSign Envelope ID: 1D5794B7-818B-4CF1-886E-601A67BB1F4C

PROJECT REFERENCE NO.	SHEET NO.
U-4715B	ITS-5.06

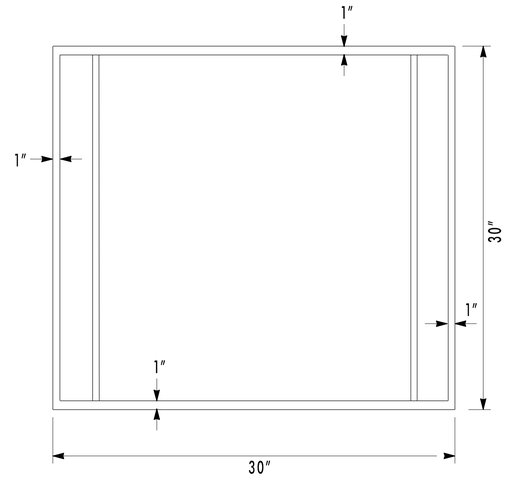

BOTTOM VIEW

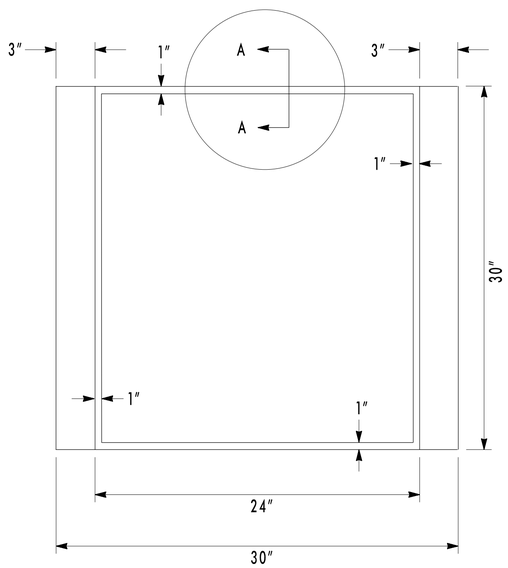

TOP VIEW

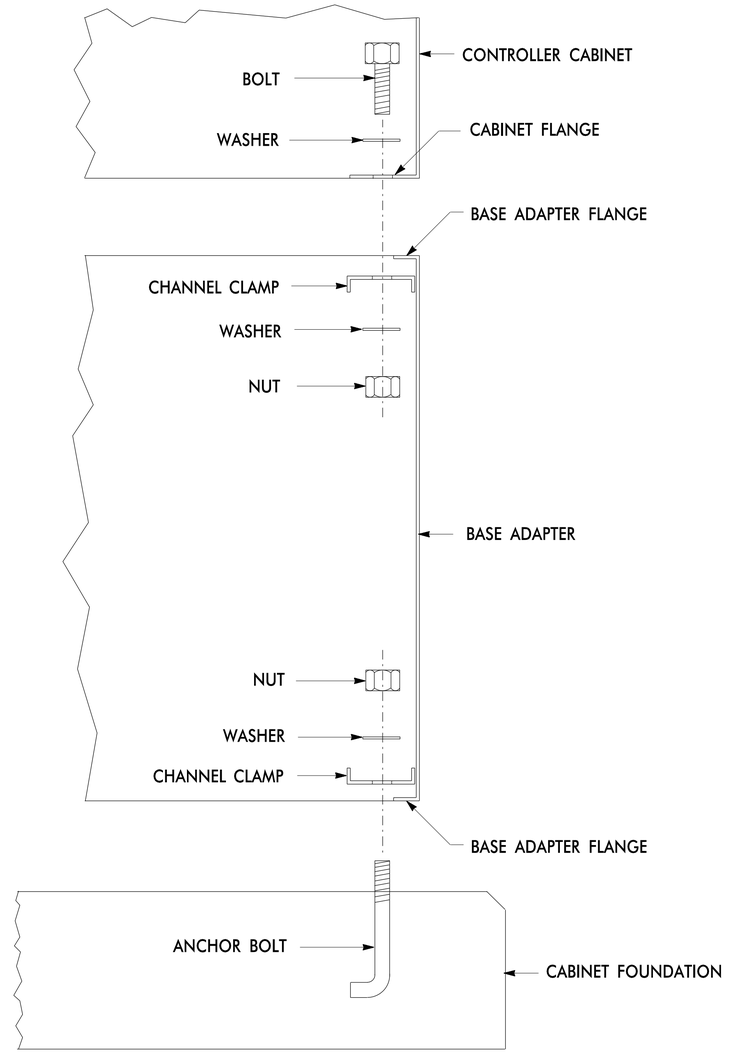

SECTION 'A – A'

BASE ADAPTER

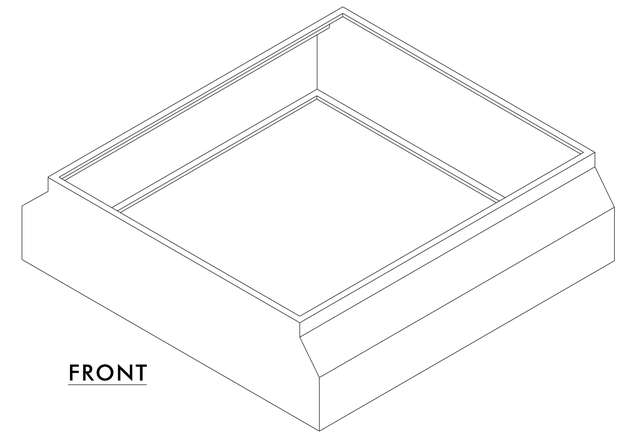

FRONT

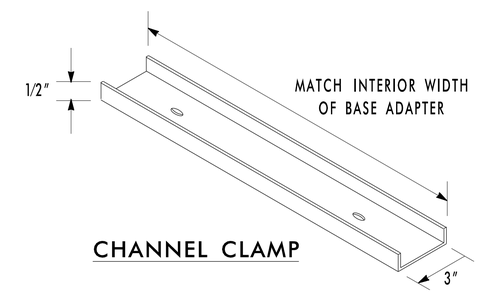

CHANNEL CLAMP

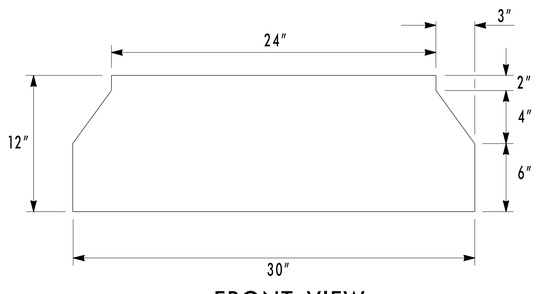

FRONT VIEW

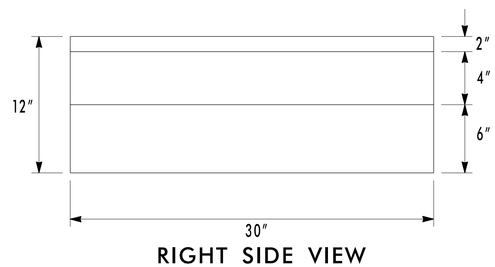

RIGHT SIDE VIEW

NOTES FOR BASE ADAPTER

1. FURNISH BASE ADAPTERS WITH FLANGES BOTH TOP AND BOTTOM SIZED AS SHOWN.
2. DRILL HOLES IN CHANNEL CLAMP TO MATCH ANCHOR BOLTS AND CABINET FLANGE BOLT HOLES.
3. APPLY CONTINUOUS, CLEAR, FLEXIBLE, WATERPROOF SEALANT TO TOP AND BOTTOM FLANGES TO SEAL TOP CONNECTION WITH THE CABINET AND BOTTOM CONNECTION WITH THE CABINET FOUNDATION.

ATKINS 1616 EAST MILLBROOK ROAD, SUITE 160
RALEIGH, NORTH CAROLINA 27609
(919) 876-6888 NCBEES #F-0326

DOCUMENT NOT CONSIDERED FINAL UNLESS ALL SIGNATURES COMPLETED

Prepared for the Offices of:
NC Transportation
750 Greenfield Parkway, Garner, NC 27529

Asheville Signal System
Base Adapter Detail

Division 13 Buncombe County Asheville

PLAN DATE: December 2016 REVIEWED BY: M B Toth
PREPARED BY: A M Quigley REVIEWED BY: J T Brooks

SCALE: N.T.S.

REVISIONS	INIT.	DATE

SEAL
NORTH CAROLINA PROFESSIONAL ENGINEER SEAL 019962 ALFRED BADGETT III

DocuSigned by: Henry Alfred Badgett III 12/21/2016
DATE

CADD Filename: 270_036_U-4715B_ITS-5.

21-DEC-2016 14:15
O:\Transportation\Traffic\Curr\10004863\2 U-4715B Asheville Sig Sys\Task 11_Typ_SD\Final Microstation Files Renamed\Volume 1 - Part 1\270_036_U-4715B_ITS-5.06.dgn
OUTFOXD AT LUSSSS195