DocuSign Envelope ID: 6ADAA7FA-0A1A-4181-8798-2CBEFA2F15D5

NOTES :

FOR BERM WIDTH DIMENSIONS, SEE GENERAL DRAWING.

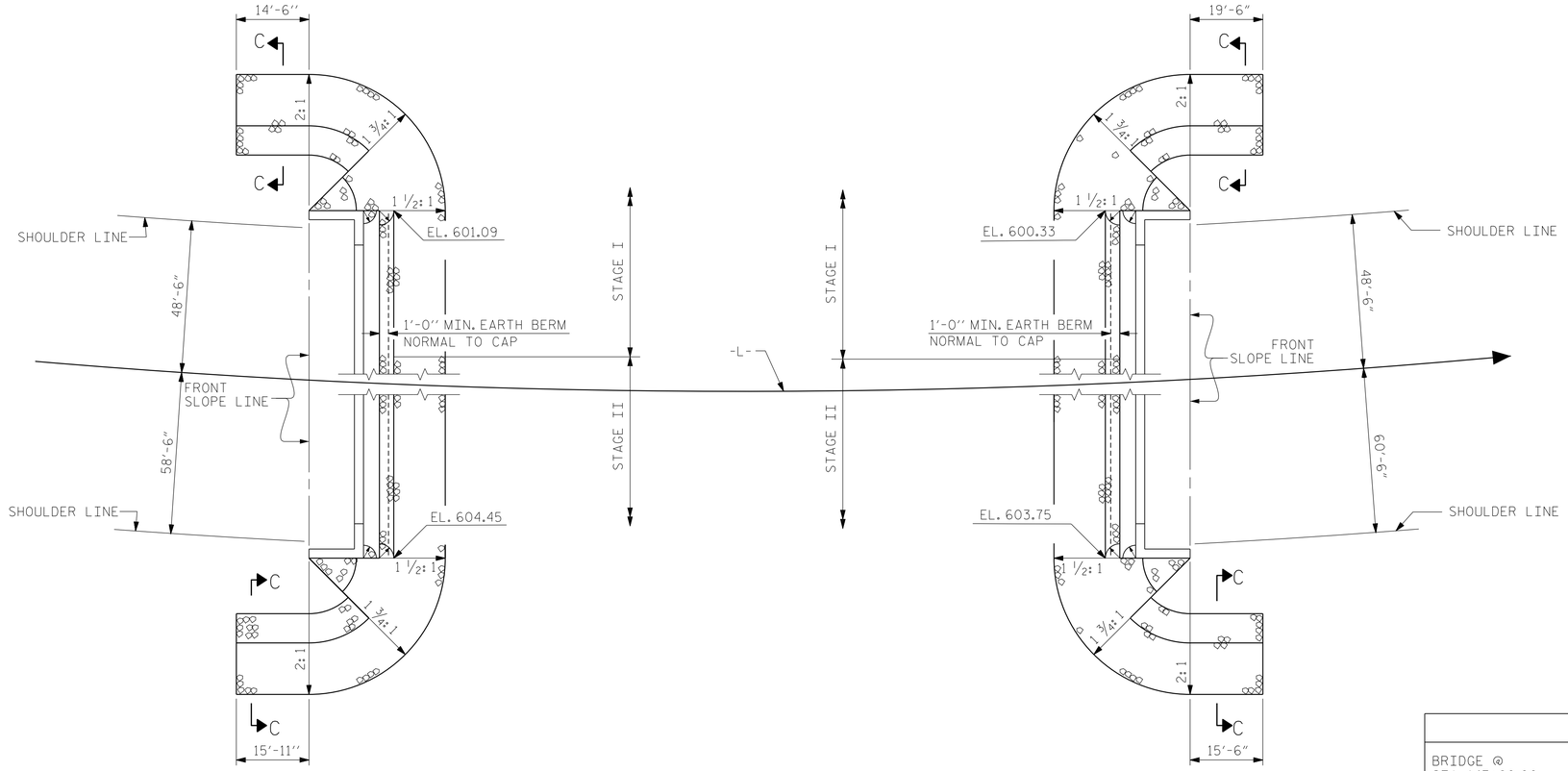

END BENT 1

END BENT 2

PLAN OF RIP RAP

ESTIMATED QUANTITIES		
BRIDGE @ STA. 147+80.00	RIP RAP CLASS II (2'-0" THICK)	GEOTEXTILE FOR DRAINAGE
	TONS	SQUARE YARDS
END BENT 1	409	454
END BENT 2	301	335

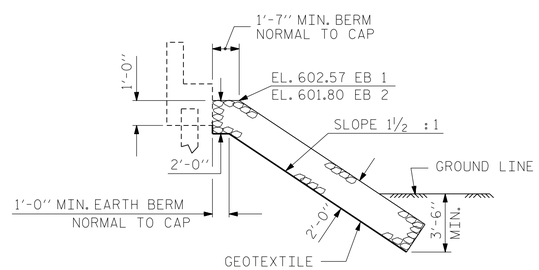

℄ SECTION

BERM RIP RAPPED

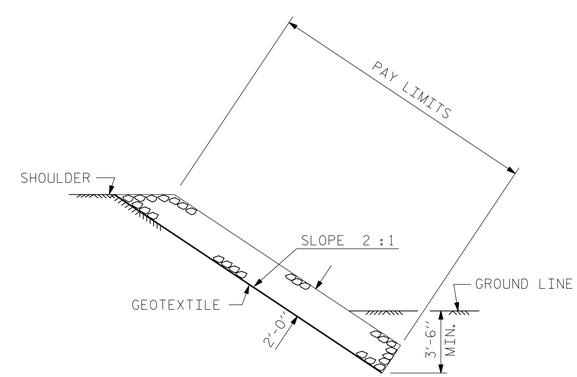

SECTION C-C

PROJECT NO. U-4910A

CABARRUS COUNTY

STATION: 147+80.00 -L-

AECOM
AECOM TECHNICAL SERVICES, INC.
701 CORPORATE CENTER DRIVE, SUITE 475
RALEIGH, NC 27607
(919) 854-6200 www.aecom.com
AECOM License No. F-0342

11/30/2016

NORTH CAROLINA PROFESSIONAL SEAL 030474 ENGINEER JOHN D. MORRISON

DocuSigned by: John D. Morrison
A2FDE142C82F4AB...

DOCUMENT NOT CONSIDERED FINAL UNLESS ALL SIGNATURES COMPLETED

STATE OF NORTH CAROLINA
DEPARTMENT OF TRANSPORTATION
RALEIGH

STANDARD

RIP RAP DETAILS

REVISIONS						
NO.	BY:	DATE:	NO.	BY:	DATE:	
1			3			
2			4			

SHEET NO. S-51

TOTAL SHEETS 55

ASSEMBLED BY : K.H. COMPTON		DATE :	5/2016
CHECKED BY : G.L. HAMILTON		DATE :	7/2016
DRAWN BY : REK 1/84	REV. 5/1/06R		TLA/GM
CHECKED BY : RDU 1/84	REV. 10/1/11		MAA/GM
	REV. 12/21/11		MAA/GM

STD. NO. RR1 (Sht. 2)

DATE: 11/30/2016
TIME: 10:59:43 AM

USER: kylecampton
DGN: G:\60330047\400_Technical\408_Structural\Cadd\40_01_U4910A_SM1_S51_RR1.dgn