DocuSign Envelope ID: 6ADAA7FA-0A1A-4181-8798-2CBEFA2F15D5

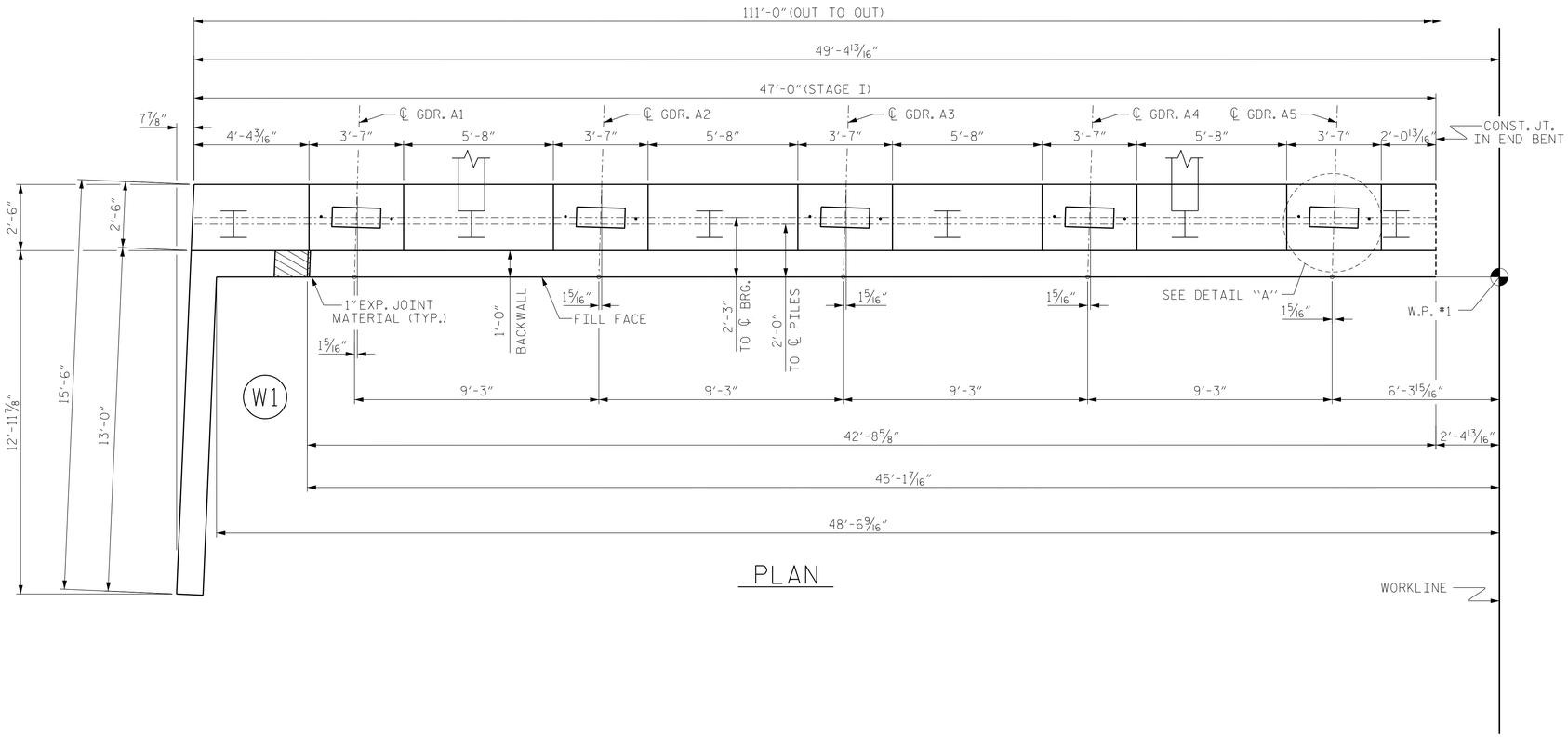

PLAN

NOTES:

STIRRUPS IN CAP MAY BE SHIFTED AS NECESSARY TO CLEAR ANCHOR BOLTS.

MECHANICAL COUPLERS SHALL BE USED TO JOIN THE #10 B1 BARS IN STAGE I WITH THE #10 B5 AND #10 B6 BARS IN STAGE II. THE LOCATION OF THE COUPLERS SHALL BE STAGGERED ON ALTERNATING BARS BY 1 FOOT AND THE STAGE I BARS SHALL BE CUT ACCORDINGLY TO ALLOW A MINIMUM OF 1'-0" AND A MAXIMUM OF 2'-0" EXTENSION INTO STAGE II CONSTRUCTION.

FOR MECHANICAL COUPLERS, SEE MECHANICAL BUTT SPLICES FOR REINFORCING STEEL IN STANDARD SPECIFICATIONS.

THE CONTRACTOR'S ATTENTION IS CALLED TO THE FACT THAT THE LENGTHS OF THE #10 B1 BARS AT THE STAGED CONSTRUCTION JOINT MAY NEED TO BE ADJUSTED DUE TO THE TYPE OF MECHANICAL BUTT SPLICE CHOSEN BY THE CONTRACTOR. NO ADDITIONAL PAYMENT WILL BE MADE FOR ANY ADJUSTMENTS.

FOR OTHER NOTES, SEE SHEET 4 OF 4.

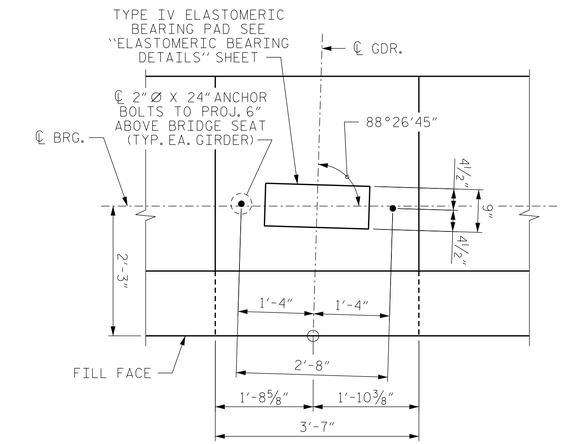

DETAIL "A"

(TYP. ALL GIRDERS)

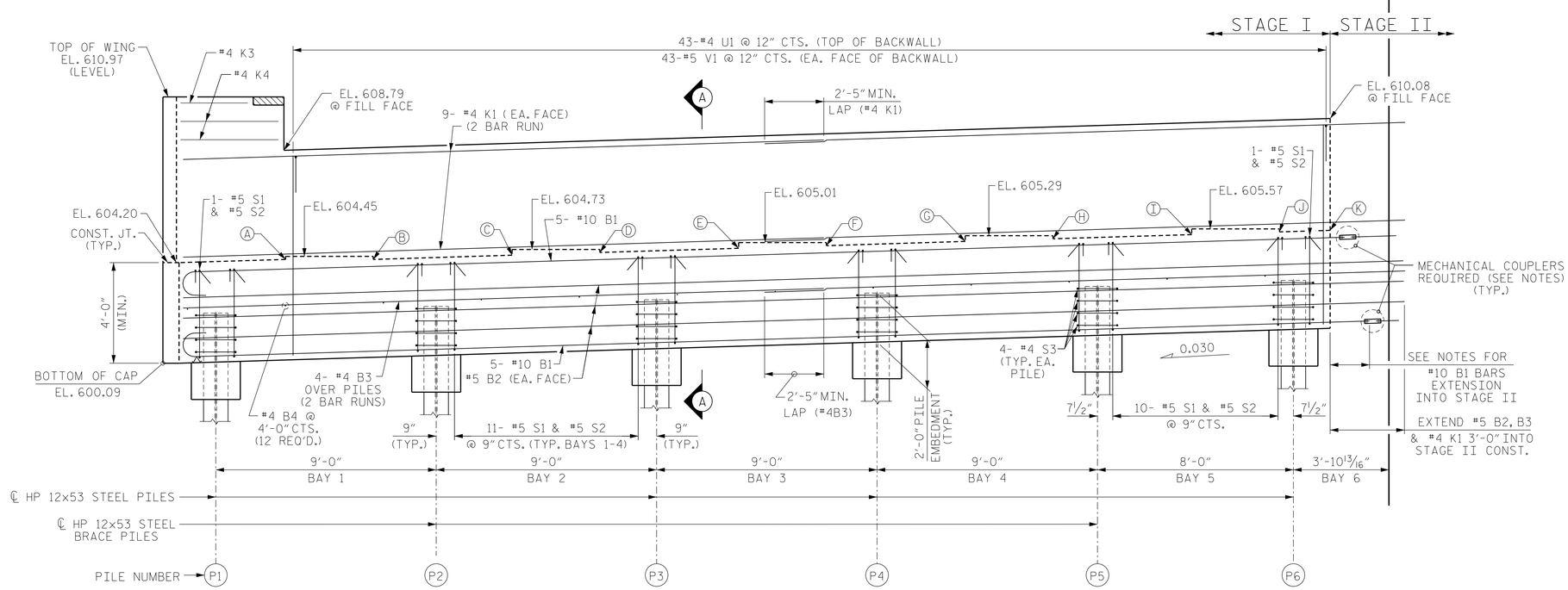

ELEVATION

** FOR LOCATION OF ELEVATION BETWEEN BRIDGE SEATS, SEE "SECTION A-A", SHEET 4 OF 4.

ELEVATIONS **	
A	604.33
B	604.33
C	604.5
D	604.61
E	604.78
F	604.89
G	605.06
H	605.17
I	605.34
J	605.45
K	605.51

PROJECT NO. U-4910A

CABARRUS COUNTY

STATION: 147+80.00 -L-

SHEET 1 OF 4

AECOM

AECOM TECHNICAL SERVICES, INC.
701 CORPORATE CENTER DRIVE, SUITE 475
RALEIGH, NC 27607
(919) 854-6200 www.aecom.com
AECOM License No. F-0342

11/30/2016

NORTH CAROLINA PROFESSIONAL SEAL 030474 ENGINEER JOHN D. MORRISON

DocuSigned by: John D. Morrison
A2FDE142C82F4AB...

STATE OF NORTH CAROLINA
DEPARTMENT OF TRANSPORTATION
RALEIGH

SUBSTRUCTURE

END BENT 1
STAGE I

REVISIONS						SHEET NO.
NO.	BY:	DATE:	NO.	BY:	DATE:	S-35
1			3			TOTAL SHEETS
2			4			55

DRAWN BY : K.H. COMPTON DATE : 3/2016
CHECKED BY : G.L. HAMILTON DATE : 7/2016
DESIGNED BY : K.H. COMPTON DATE : 3/2016

DOCUMENT NOT CONSIDERED FINAL UNLESS ALL SIGNATURES COMPLETED

DATE: 11/30/2016
TIME: 10:28:03 AM

USER: kyleccompton
DGN: G:\60300471\400_Technical\408_Structural\Cadd\40_069_U4910A_SMU_S35_EB01.dgn