DocuSign Envelope ID: 6ADAA7FA-0A1A-4181-8798-2CBEFA2F15D5

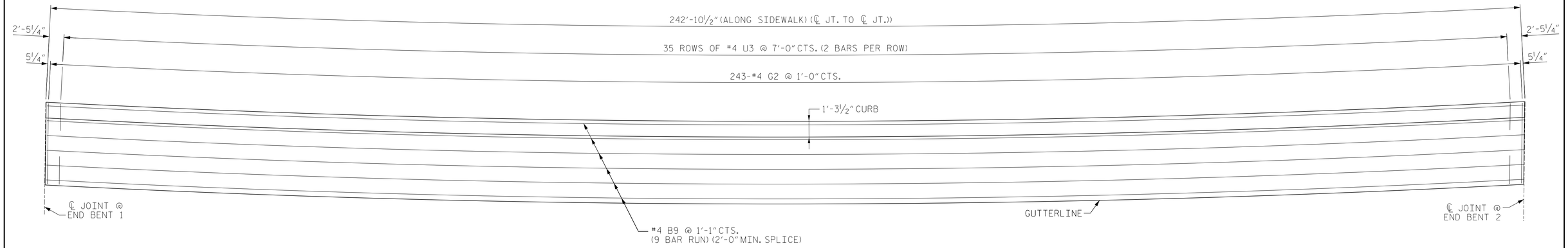


LEFT SIDEWALK

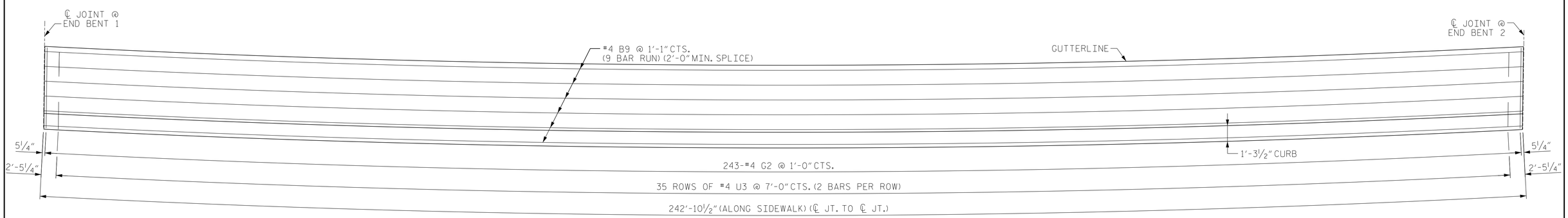


RIGHT SIDEWALK

## PLAN OF SIDEWALK

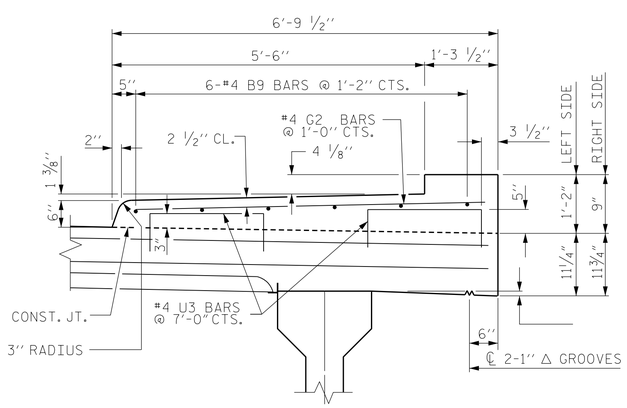


## SECTION THRU SIDEWALK

** DOWELS MAY BE PUSHED INTO GREEN CONCRETE AFTER SPAN HAS BEEN SCREEDED OFF.

## NOTES

SIDEWALK IN A CONTINUOUS UNIT SHALL NOT BE CAST UNTIL ALL SLAB CONCRETE IN THE UNIT HAS BEEN CAST AND HAS REACHED A MINIMUM COMPRESSIVE STRENGTH OF 3,000 PSI.

GROOVED CONTRACTION JOINT, ½" IN DEPTH, SHALL BE TOOLED IN ALL EXPOSED FACES OF THE SIDEWALK IN ACCORDANCE WITH ARTICLE 825-10(B) OF THE STANDARD SPECIFICATIONS. THE CONTRACTION JOINT SHALL BE LOCATED AT A SPACING OF 8 FT. TO 10 FT. BETWEEN EXPANSION JOINTS. NO CONTRACTION JOINTS WILL BE REQUIRED FOR SEGMENTS LESS THAN 10 FEET IN LENGTH.

SIDEWALK REINFORCING STEEL AND CONCRETE ON BRIDGE DECK SHALL BE INCLUDED IN THE LUMP SUM PAY ITEM FOR "REINFORCED CONCRETE DECK SLAB".

SIDEWALK REINFORCING STEEL AND CONCRETE ON APPROACH SLAB SHALL BE INCLUDED IN THE LUMP SUM PAY ITEM FOR "BRIDGE APPROACH SLAB".

FOR SIDEWALK REINFORCING STEEL AND CONCRETE QUANTITIES ON BRIDGE DECK, SEE "SUPERSTRUCTURE BILL OF MATERIAL" SHEET.

ALL REINFORCING STEEL IN SIDEWALK SHALL BE EPOXY COATED.

FOR EXPANSION JOINT SEAL DETAILS SEE "EXPANSION JOINT SEAL DETAILS" SHEET.

FOR SIDEWALK COVER PLATE DETAILS AT EXPANSION JOINTS SEE "EXPANSION JOINT SEAL DETAILS FOR SIDEWALK" SHEET.

THE #4 U3 BARS MAY BE PUSHED INTO GREEN CONCRETE AFTER THE DECK HAS BEEN FINISHED.

PROJECT NO. U-4910A
CABARRUS COUNTY
STATION: 147+80.00 -L-

| | | | |
|---|---|---|---|
| DRAWN BY : | N.K. BROWN | DATE : | 5/2016 |
| CHECKED BY : | J.C. MORRISON | DATE : | 7/2016 |
| DESIGNED BY : | N.K. BROWN | DATE : | 5/2016 |

DOCUMENT NOT CONSIDERED FINAL UNLESS ALL SIGNATURES COMPLETED

AECOM
AECOM TECHNICAL SERVICES, INC.
701 CORPORATE CENTER DRIVE, SUITE 475
RALEIGH, NC 27607
(919) 854-6200 www.aecom.com
AECOM License No. F-0342

11/30/2016

NORTH CAROLINA PROFESSIONAL SEAL 030474 ENGINEER JOHN C. MORRISON

DocuSigned by: John C. Morrison
A2FDE142C82F4AB...

STATE OF NORTH CAROLINA
DEPARTMENT OF TRANSPORTATION
RALEIGH

SUPERSTRUCTURE

SIDEWALK DETAILS

| REVISIONS | | | | | | SHEET NO. |
|---|---|---|---|---|---|---|
| NO. | BY: | DATE: | NO. | BY: | DATE: | S-29 |
| 1 | | | 3 | | | TOTAL SHEETS |
| 2 | | | 4 | | | 55 |

DATE: 11/30/2016
TIME: 10:09:43 AM

USER: kylecampton
DGN: Q:\60530471\400_Technical\408_Structural\Cadd\40_DST_U4910A_SWU_S29_SWDET.dgn