DocuSign Envelope ID: BC000B93-086F-406E-BBD2-DDA678B4168F

HNTB NORTH CAROLINA, P.C.
343 E. Six Forks Road, Suite 200
Raleigh, North Carolina 27609
NC License No: C-1554

PROJECT REFERENCE NO.	SHEET NO.
R-5023B	2A-2

ROADWAY DESIGN ENGINEER
NORTH CAROLINA PROFESSIONAL SEAL 25474 ENGINEER W. CRAIG PARKER
DocuSigned by: W. Craig Parker
12/12/2016
PAVEMENT DESIGN ENGINEER
NORTH CAROLINA PROFESSIONAL SEAL 022896 ENGINEER CLARK G. MORRISON
DocuSigned by: Clark Morrison
12/13/2016

DOCUMENT NOT CONSIDERED FINAL UNLESS ALL SIGNATURES COMPLETED

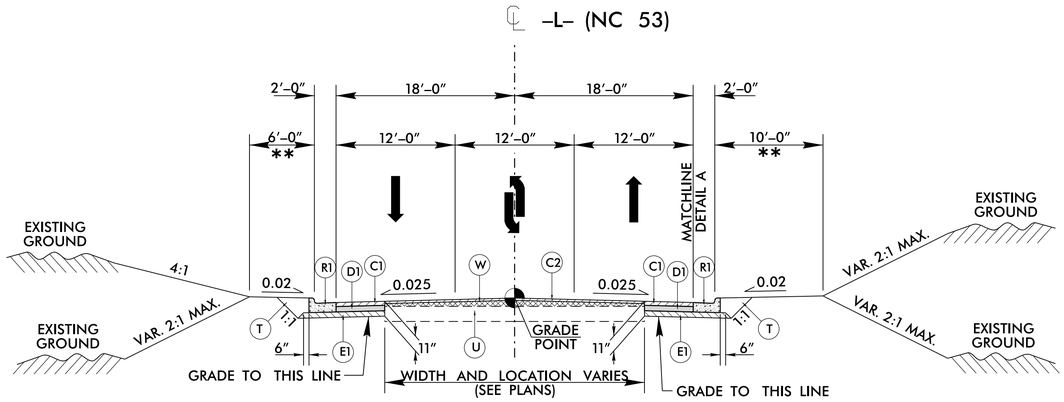

TYPICAL SECTION NO. 3

USE TYPICAL SECTION NO. 3 AS FOLLOWS:
–L– STA. 71+00.00 TO STA. 104+25.00

** NOTE: REDUCED BERM WIDTH AS FOLLOWS:
–L– STA. 87+50.00 TO STA. 89+00.00 RT (SEE X-SECTIONS)
–L– STA. 74+50.00 TO STA. 77+00.00 LT (SEE X-SECTIONS)

–Y1– (SR 1214 – FOY-LOCKAMY RD)
–Y2– (SR 1105 – HAWS RUN RD)
–Y3– (SR 1113 – MURRILL HILL RD)
–Y4– (SR 1212 – PONY FARM RD)
–Y9– (SR 1109 – HOLLY SHELTER RD)

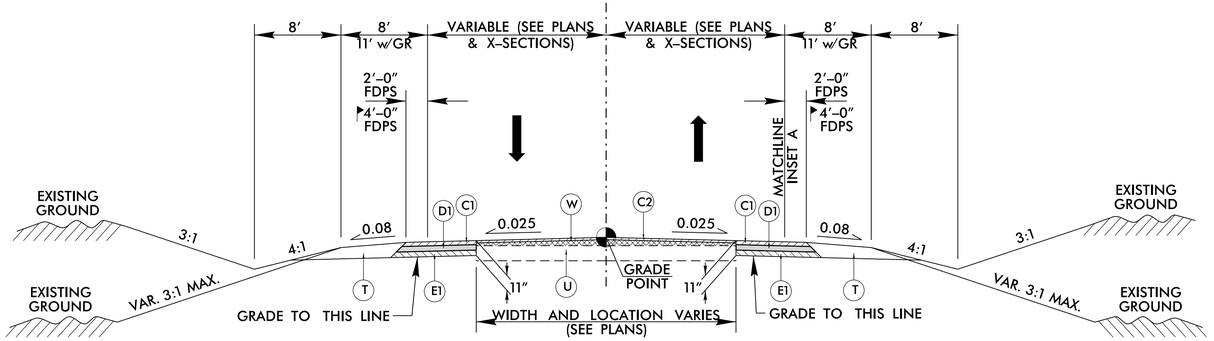

TYPICAL SECTION NO. 4

USE TYPICAL SECTION NO. 4 AS FOLLOWS:
–Y1– STA. 10+17.34 TO STA. 10+80.00
–Y2– STA. 12+75.00 TO STA. 13+63.86
–Y3– STA. 10+85.00 TO STA. 11+49.12
–Y4– STA. 10+18.06 TO STA. 11+25.00
–Y9– STA. 13+25.00 TO STA. 15+57.28

DETAIL 'A'

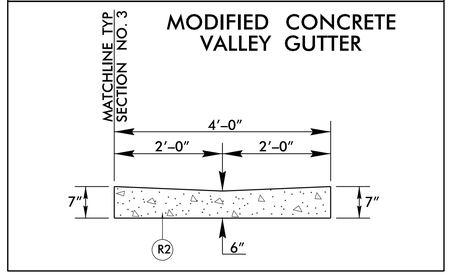

USE DETAIL 'A' AS FOLLOWS:
–L– STA. 71+76+/– TO STA. 72+33+/– RT
–L– STA. 72+73+/– TO STA. 73+22+/– RT

PAVEMENT SCHEDULE (FINAL PAVEMENT DESIGN)	
C1	3" S9.5B
C2	1.5" S9.5B
D1	4" I19.0B
E1	4" B25.0B
R1	2'x6" C & G
R2	VALLEY GUTTER
T	EARTH MATERIAL
U	EXIST. PVM'T
W	WEDGING

NOTES: PAVEMENT EDGE SLOPES ARE 1:1 UNLESS SHOWN OTHERWISE.
SEE SHEET 2A-1 FOR FULL PAVEMENT SCHEDULE.

INSET 'A'

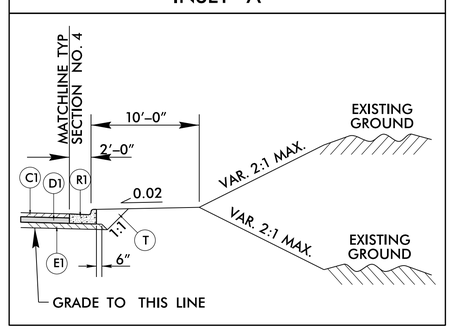

USE INSET 'A' AS FOLLOWS:
–Y3– STA. 10+85.00 TO STA. 11+49.12 RT
–Y4– STA. 10+18.06 TO STA. 11+23.39 RT

6/2/99
12-DEC-2016 15:29
\\s-hntb.com\projects\49353 Division 3 Environmental Outsourcing\Task Order 02 - NC 53\Roadway\Proj\R5023BC_Rdy_typ.dgn