DocuSign Envelope ID: C651D33D-A0D3-4D38-AFF0-ED710E8ED3FD

PROJ. REFERENCE NO.	SHEET NO.
R-4753	TMP-26

HDR Engineering, Inc. of the Carolinas
555 Fayetteville St, Suite 900 Raleigh, N.C. 27601
N.C.B.E.L.S. License Number: F-0116

13	TEMPORARY SHORING No.13 QUANTITY = 264 SQ. FT. FROM -L- STA. 164+33 +/-, 13.50' RT TO -L- STA. 164+93 +/-, 13.50' RT
14	TEMPORARY SHORING No.14 QUANTITY = 264 SQ. FT. FROM -DET2- STA. 13+17 +/-, 19.0' LT TO -DET2- STA. 13+77 +/-, 19.0' LT
15	TEMPORARY SHORING No.15 QUANTITY = 644 SQ. FT. FROM -L- STA. 168+07 +/-, 13.50' RT TO -L- STA. 168+72 +/-, 13.50' RT
16	TEMPORARY SHORING No.16 QUANTITY = 644 SQ. FT. FROM -DET2- STA. 16+77 +/-, 19.0' LT TO -DET2- STA. 17+42 +/-, 19.0' LT

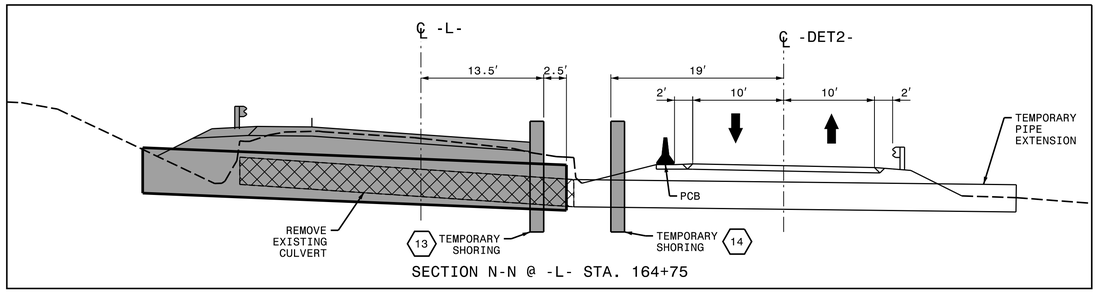

SECTION N-N @ -L- STA. 164+75

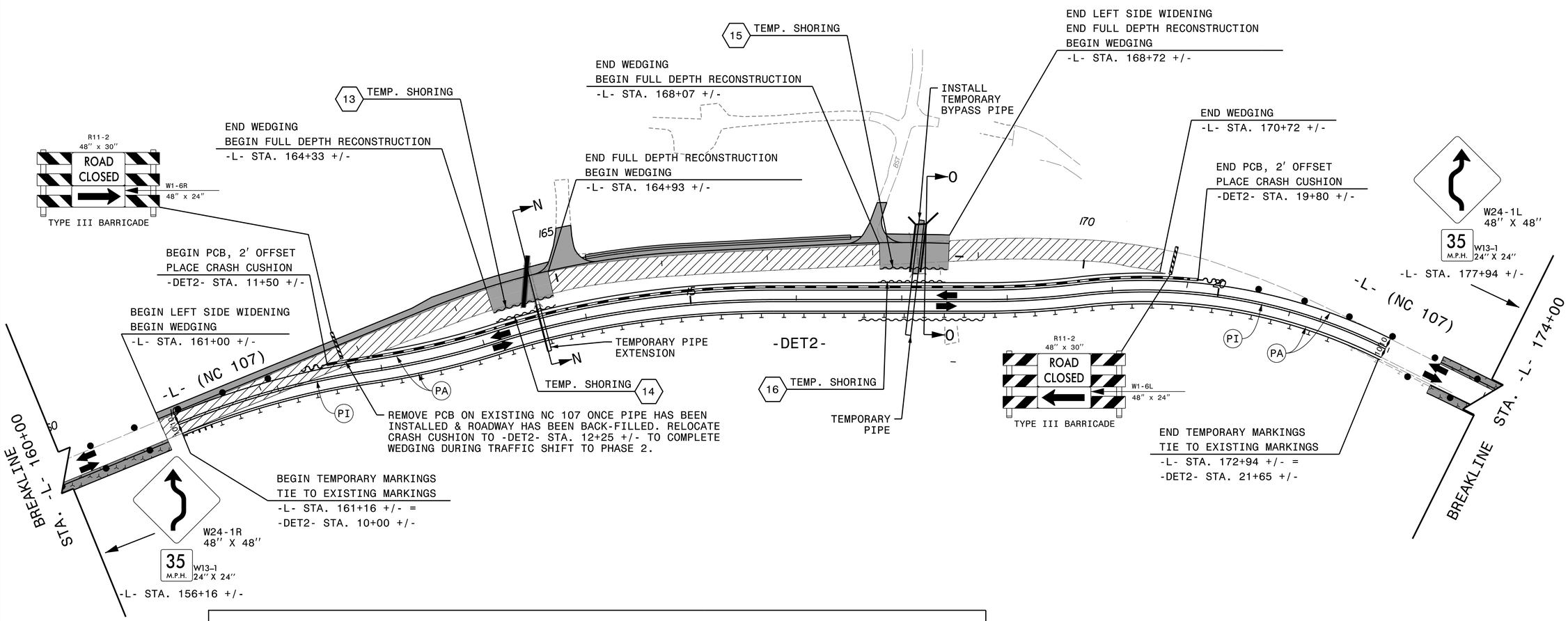

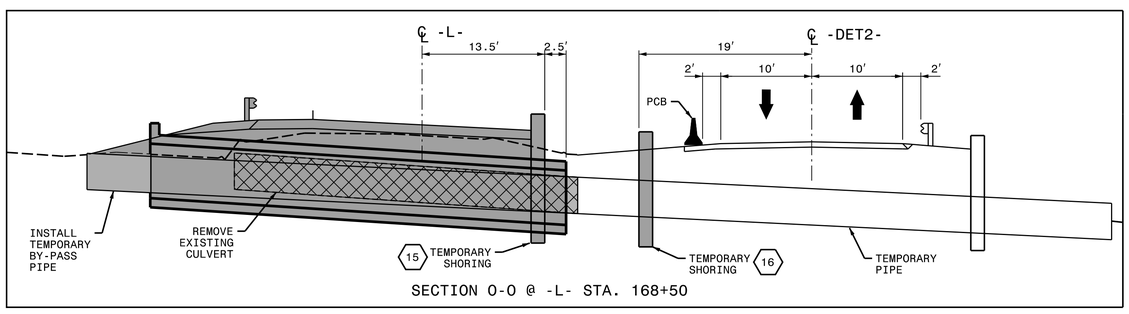

SECTION O-O @ -L- STA. 168+50

APPROVED: Michelle Ward
F838575EB926486...

DATE: 9/2/2016

SEAL

NORTH CAROLINA PROFESSIONAL SEAL 033789 ENGINEER MICHELLE WARD

DIVISION OF HIGHWAYS STATE OF NORTH CAROLINA DEPARTMENT OF TRANSPORTATION WORK ZONE TRAFFIC CONTROL

DOCUMENT NOT CONSIDERED FINAL UNLESS ALL SIGNATURES COMPLETED

PHASE 1, STEPS 2 & 3

PLOT DRIVER: NCDOT_pdf_color_eng_50.plt PENTABLE: NCDOT_tcp.tbl
USER: bscott DATE: 9/2/2016 TIME: 2:02:23 PM
FILE: pw:\\PWAPPTPA01:SouthEast_Tampa\Documents\000166\CON0079759\CON0099518\0000000002589 94\6.0_CAD_BIM\6.2_Work_In_Progress\R-4753\Traffic\TrafficControl\TCP\R-4753_TMP_TMP-26.dgn