5/14/99

PROJECT REFERENCE NO.	SHEET NO.
B-5125	UC-3C

DESIGNED BY: RDE
DRAWN BY: RDE
CHECKED BY: LGF
APPROVED BY: MRB
REVISED:

NORTH CAROLINA DEPARTMENT OF TRANSPORTATION

UTILITIES ENGINEERING SEC.
PHONE:(919)707-6690
FAX:(919)250-4151

NORTH CAROLINA PROFESSIONAL ENGINEER SEAL 22992 RAY D. ELLIOTT
DocuSigned by: Ray D. Elliott 0BFA26F63564434...
6/29/2016

UTILITY CONSTRUCTION PLANS ONLY

TGS ENGINEERS
804-C N. LAFAYETTE ST
SHELBY, NC 28150
PH (704) 476-0003
CORP. LICENSE NO.: C-0275

DOCUMENT NOT CONSIDERED FINAL UNLESS ALL SIGNATURES COMPLETED

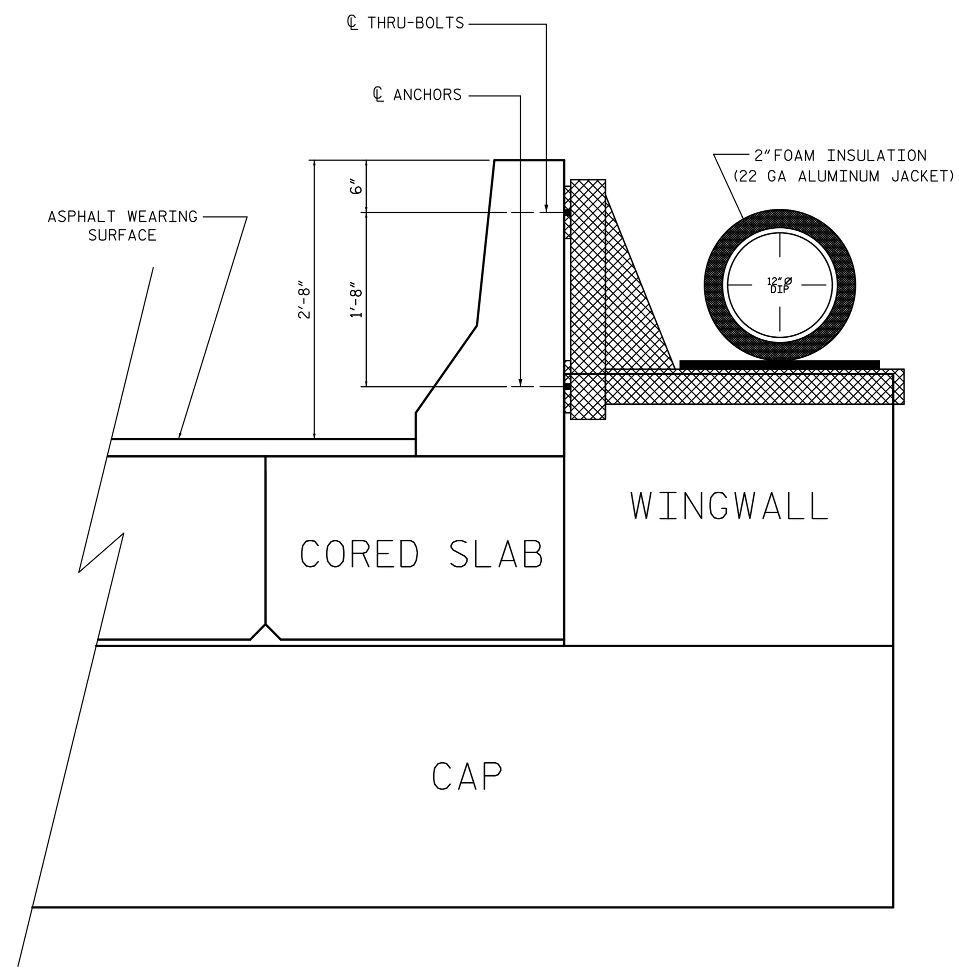

END BENT #1

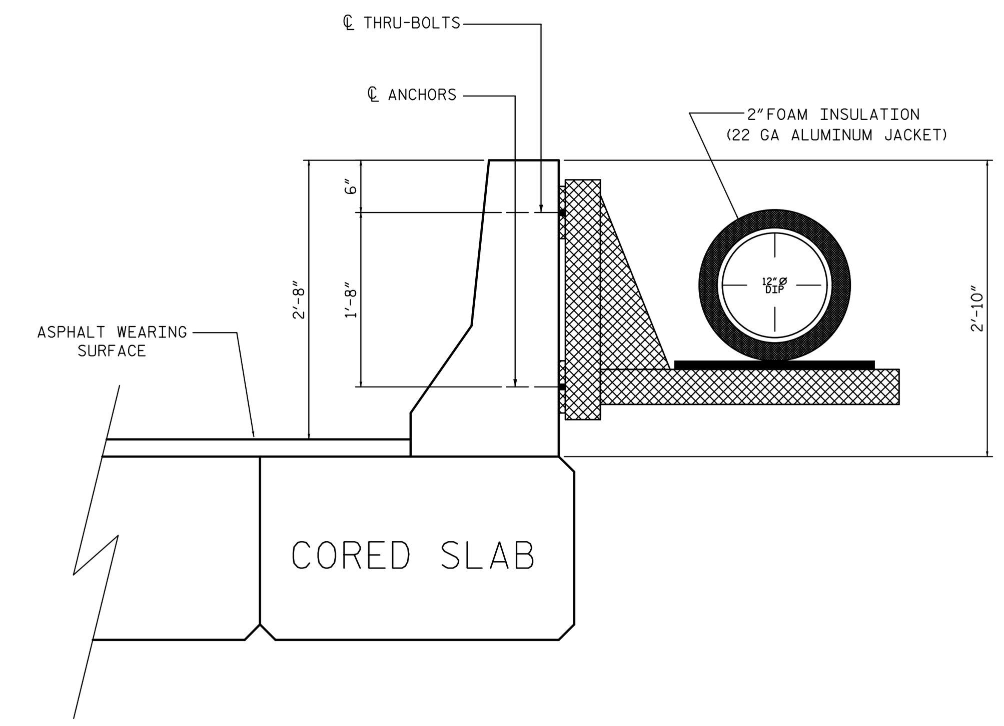

SPANS 1-4

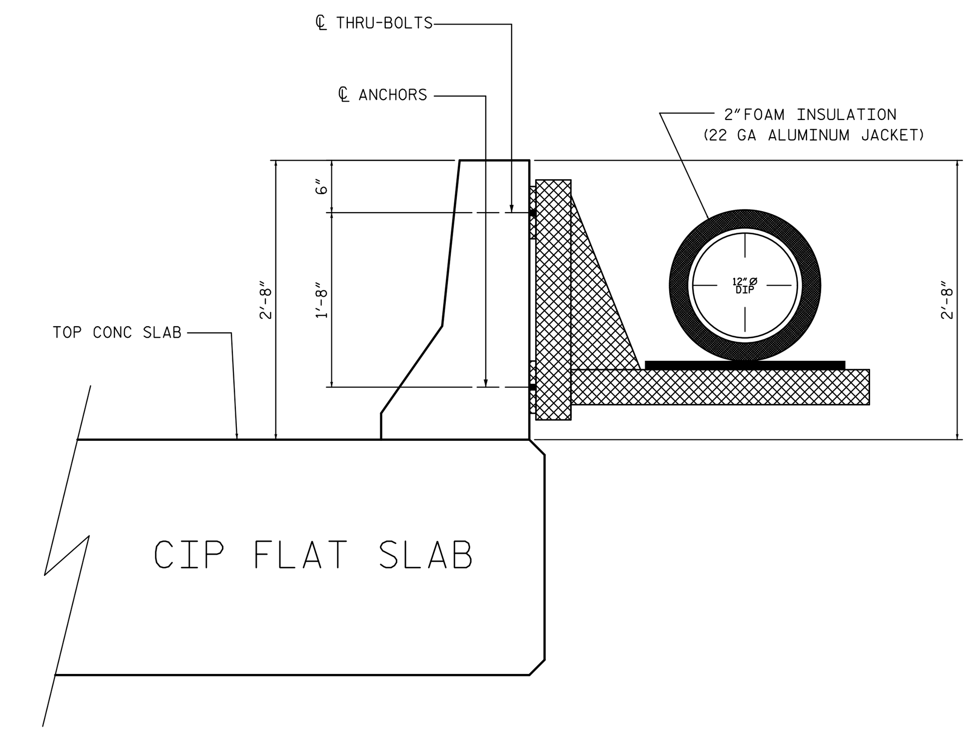

SPAN 5

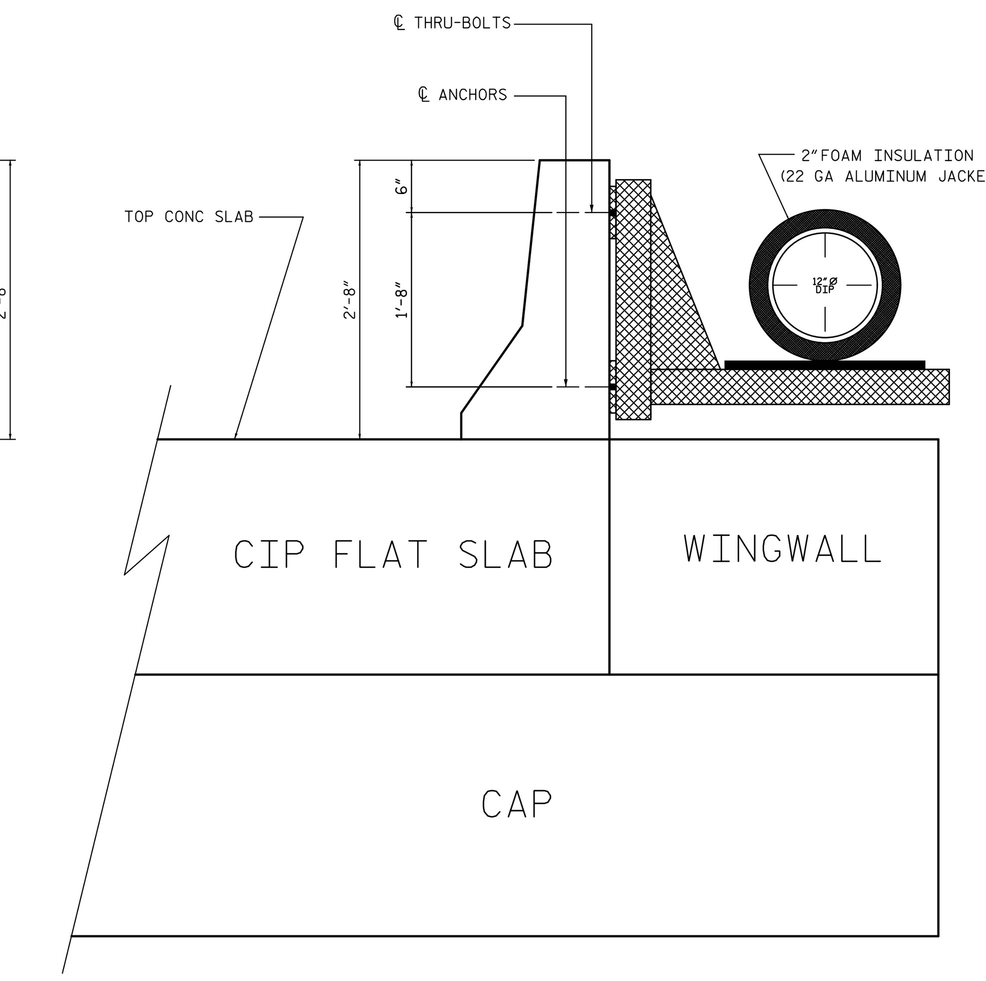

END BENT #2

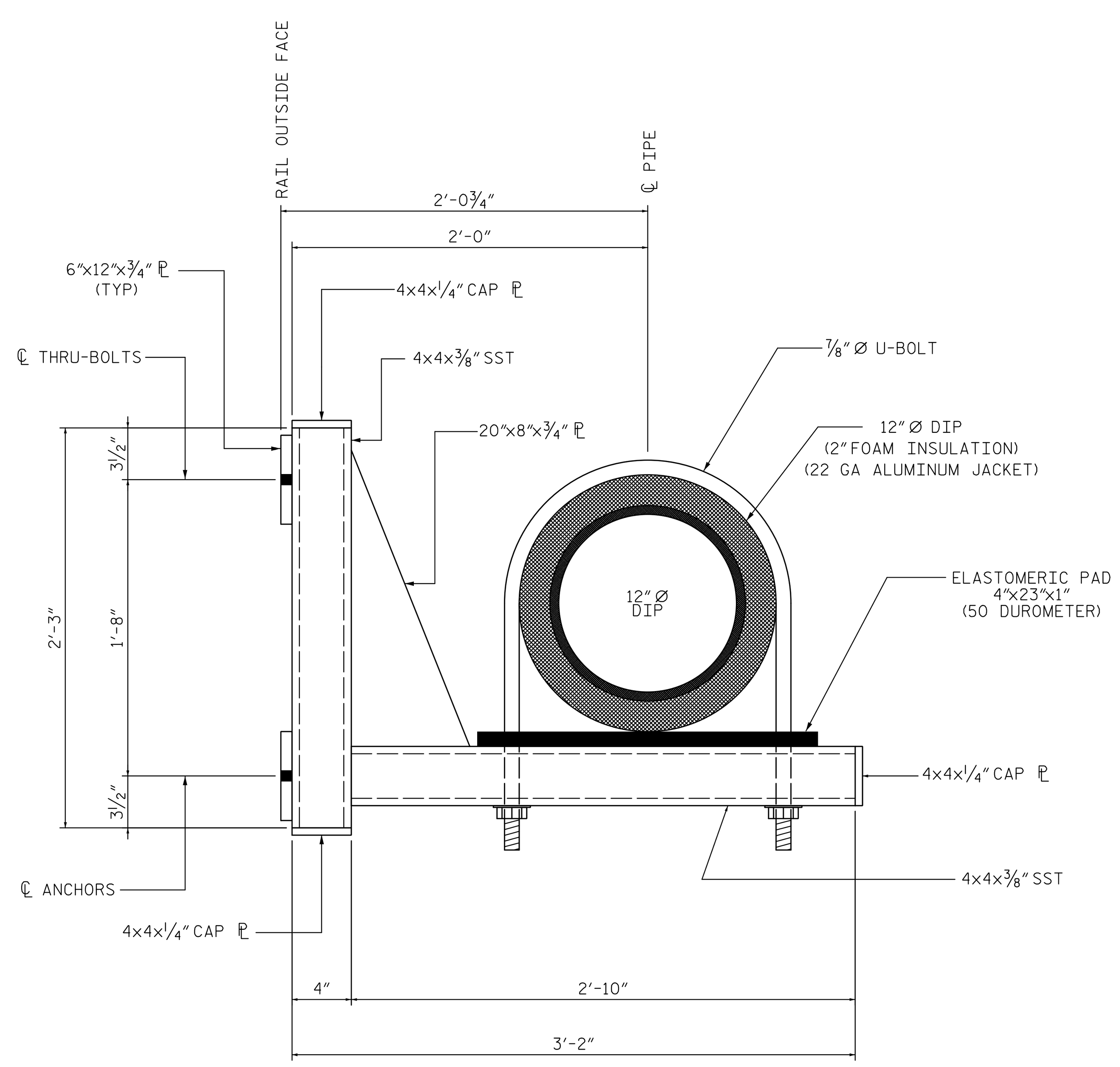

HANGER ASSEMBLY

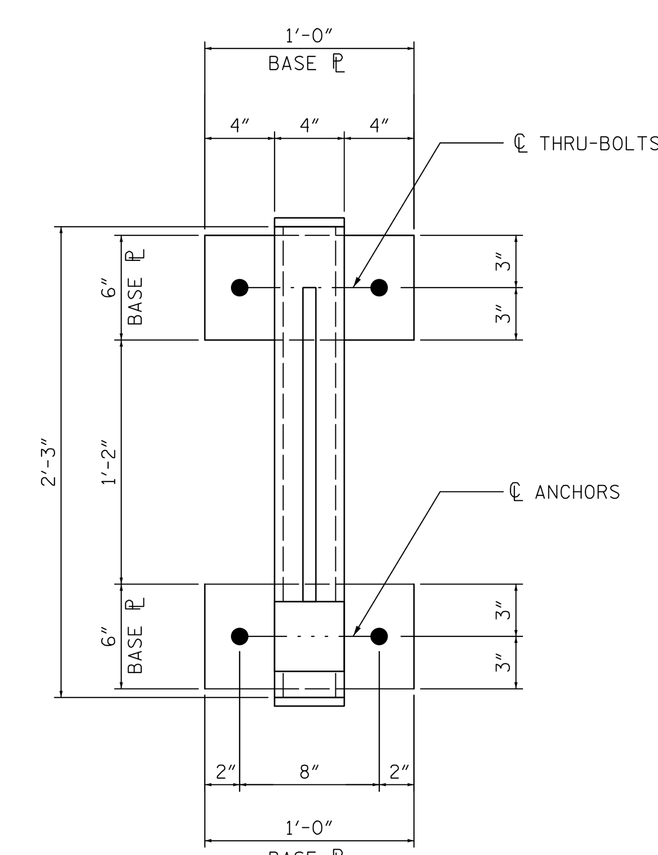

THRU-BOLT/ANCHOR LAYOUT

(2 THRU-BOLTS TOP BASE ℙ)
(2 ANCHORS BOTTOM BASE ℙ)

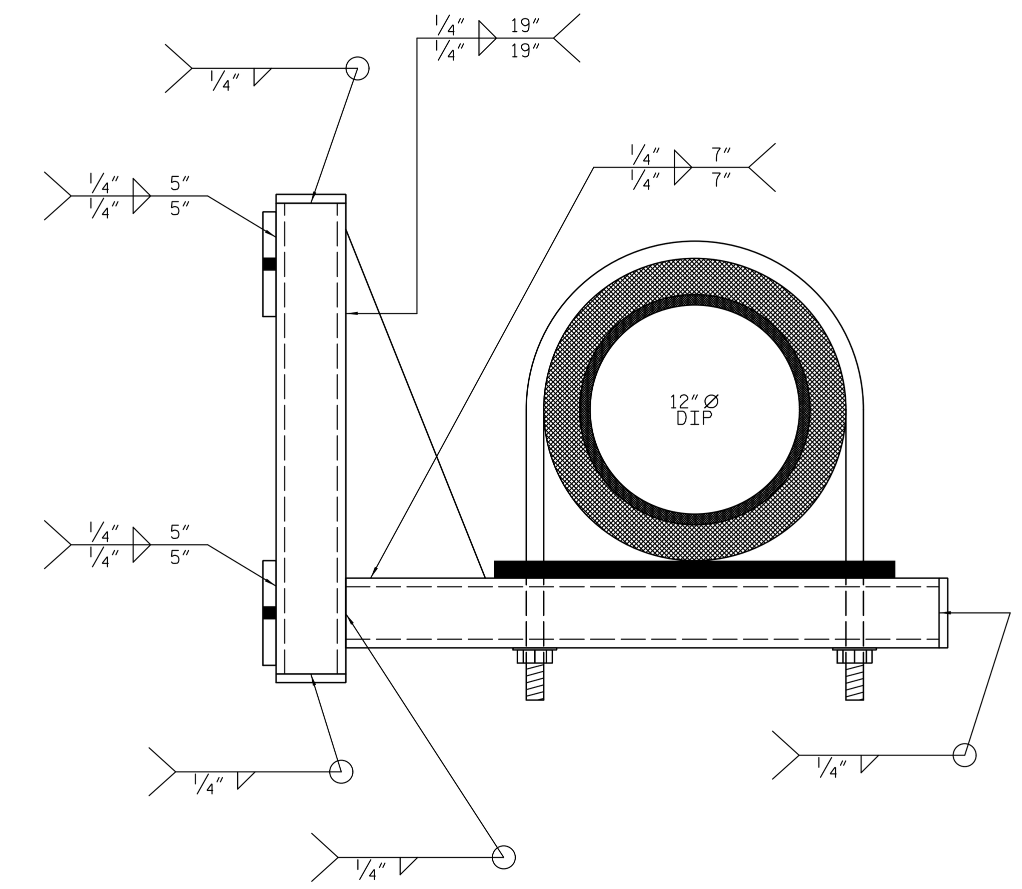

WELD DETAILS

(¼″FILLET WELDS)
(70ksi ELECTRODE)

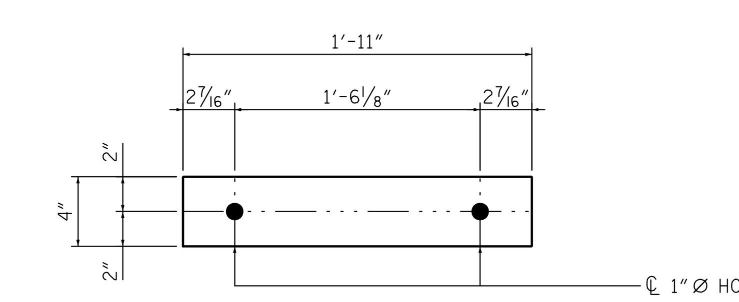

PLAN VIEW

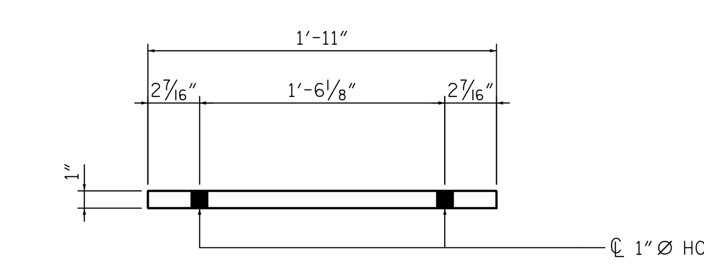

ELEVATION VIEW

ELASTOMERIC PAD

(TO BE USED WITH HANGER)
(50 DUROMETER)
(VERIFY DIMENSIONS PRIOR TO FABRICATION)

EXISTING BRIDGE WATER LINE ATTACHMENT

$$$$SYSTIME$$$$
$$$$$$$$DGN$$$$$$$$$$$$$$$$
$$$$USERNAME$$$$