PROJECT REFERENCE NO.	SHEET NO.
B-5125	2C-1

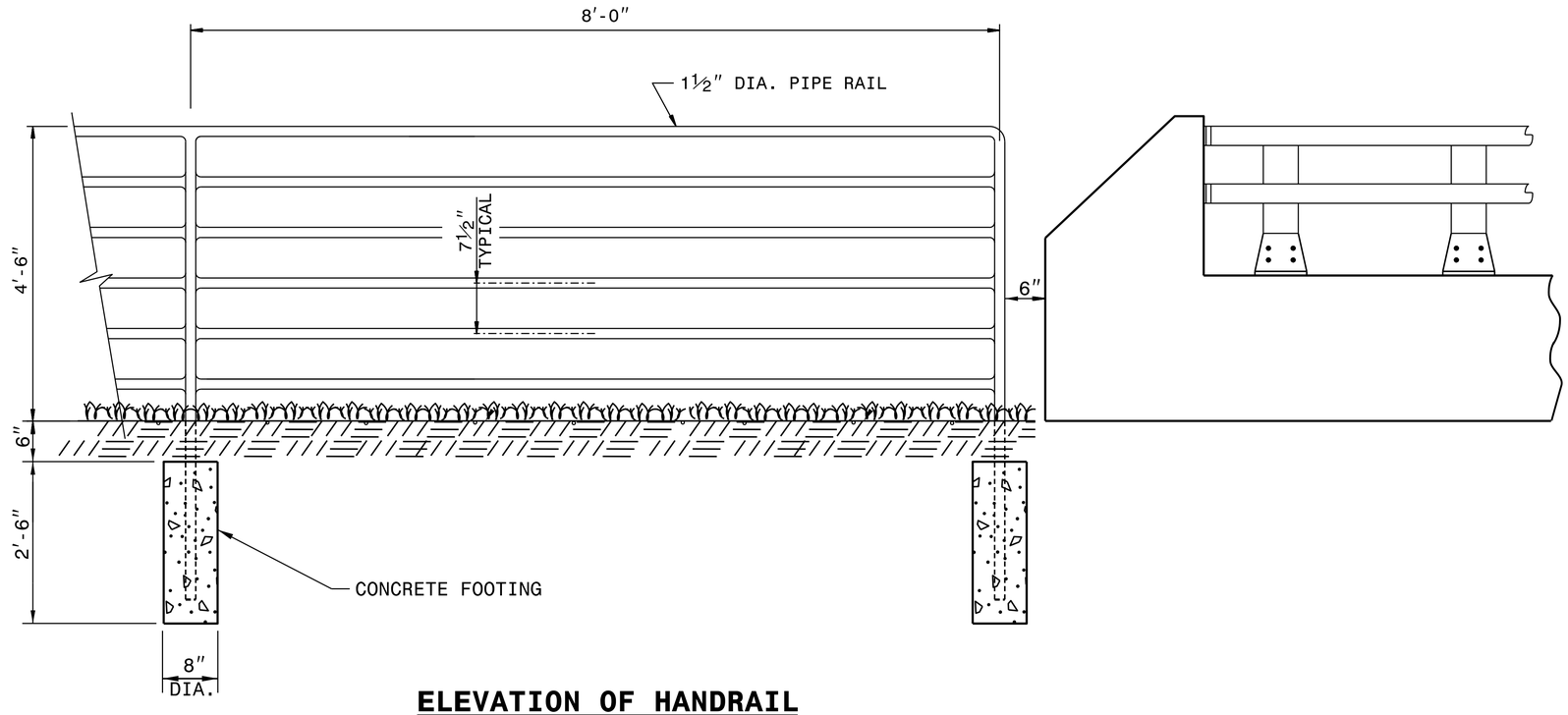

ELEVATION OF HANDRAIL

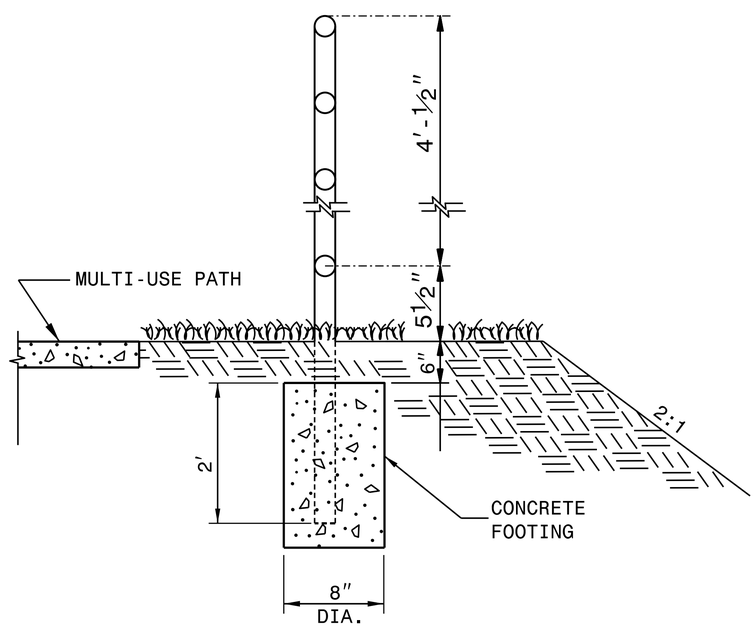

INSET 'A'

NOTES:

CONSTRUCT PROPOSED STEEL PIPE RAIL OF 1½" DIAMETER SCHEDULE 40 PLAIN END GALVANIZED STEEL PIPE MEETING THE REQUIREMENTS OF ASTM A53.

REPAIR GALVANIZING IN ACCORDANCE WITH SECTION 1076 OF THE NCDOT STANDARD SPECIFICATIONS.

PAINT, IF REQUIRED BY THE ENGINEER, IN ACCORDANCE WITH SECTION 1080 OF THE STANDARD SPECIFICATIONS.

WELD IN ACCORDANCE WITH ARTICLE 1072-18 OF THE STANDARD SPECIFICATIONS.

USE CLASS 'B' CONCRETE FOR HANDRAIL FOOTINGS.

PLACEMENT OF HANDRAIL IN RELATION TO 2-BAR METAL BRIDGE RAIL AND PATH MAY BE MODIFIED AS DIRECTED BY THE ENGINEER.

NORTH CAROLINA PROFESSIONAL SEAL 022966 ENGINEER Joel S. Howerton

DocuSign Envelope ID: 873F3D17DCDC45B... Joel S. Howerton 5/16/2016

DOCUMENT NOT CONSIDERED FINAL UNLESS ALL SIGNATURES COMPLETED

CONTRACT STANDARDS AND DEVELOPMENT UNIT
Office 919-707-6950 FAX 919-250-4119

PROPOSED BIKE/PED SAFETY RAIL

ORIGINAL BY:	E.E. WARD	DATE:	12-99
MODIFIED BY:	K.A. KEMPF	DATE:	5-16
CHECKED BY:		DATE:	
FILE SPEC.:	jhowerton/handrail adjacent to sidewalk.dgn		

$$$$$SYSTIME$$$$$
$$$$$