PROJECT REFERENCE NO.	SHEET NO.
B-5125	2A-3

ROADWAY DESIGN ENGINEER
NORTH CAROLINA PROFESSIONAL SEAL 033296 ENGINEER Steven D. Kendall
DocuSigned by: Steven D. Kendall 5/17/2016
C919CB49D9EE4A2

PAVEMENT DESIGN ENGINEER
NORTH CAROLINA PROFESSIONAL SEAL 022896 ENGINEER CLARK S. MORRISON
DocuSigned by: Clark S. Morrison 5/16/2016
B0A110DD1E004C4

DOCUMENT NOT CONSIDERED FINAL UNLESS ALL SIGNATURES COMPLETED

C1	1½" TYPE S9.5B
C2	3" TYPE S9.5B
C3	VAR. DEPTH TYPE S9.5B
D1	4" TYPE I19.0B
D2	VAR. DEPTH TYPE I19.0B
E1	5" TYPE B25.0B
E2	VAR. DEPTH TYPE B25.0B
J	6" ABC
R1	2'-6" CONC. CURB & GUTTER
R2	EXIST. 2'-6" CONC. CURB & GUTTER
R3	5" CONC. MONOLITHIC ISLAND
T	EARTH MATERIAL
U	EXISTING PAVEMENT
V	1½" MILLING
W	WEDGING

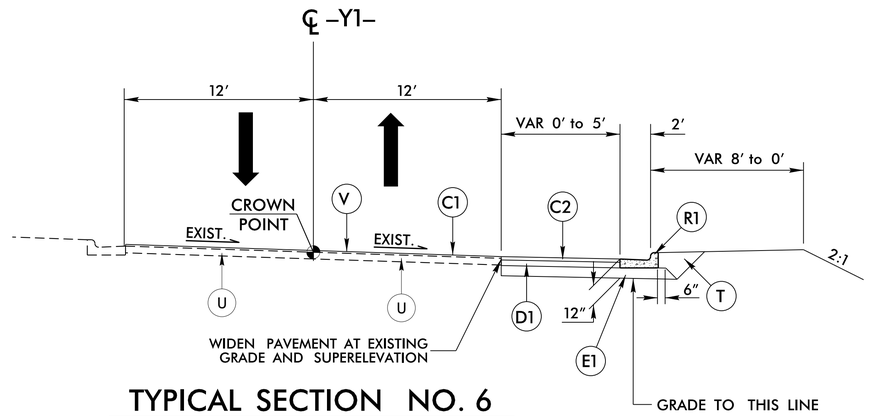

TYPICAL SECTION NO. 6

USE TYPICAL SECTION NO. 6 AS FOLLOWS
–Y1– STA 30+00.00 TO STA 35+60.17 RT.

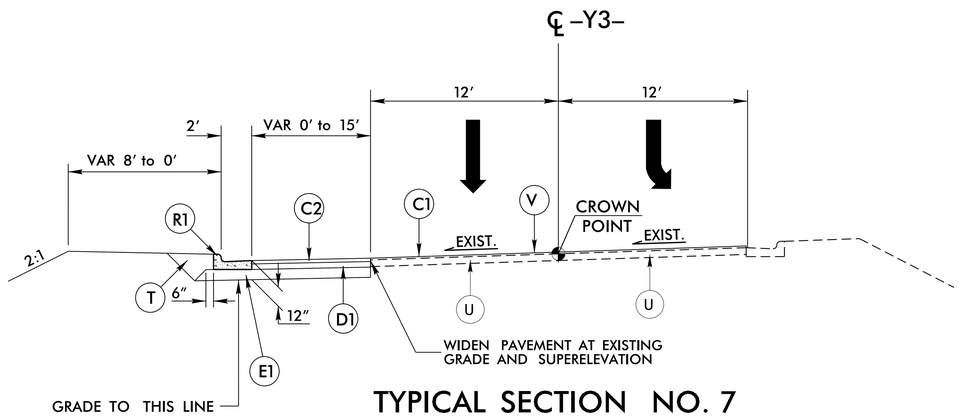

TYPICAL SECTION NO. 7

USE TYPICAL SECTION NO. 7 AS FOLLOWS
–Y3– STA 10+24.00 TO STA 11+41.00

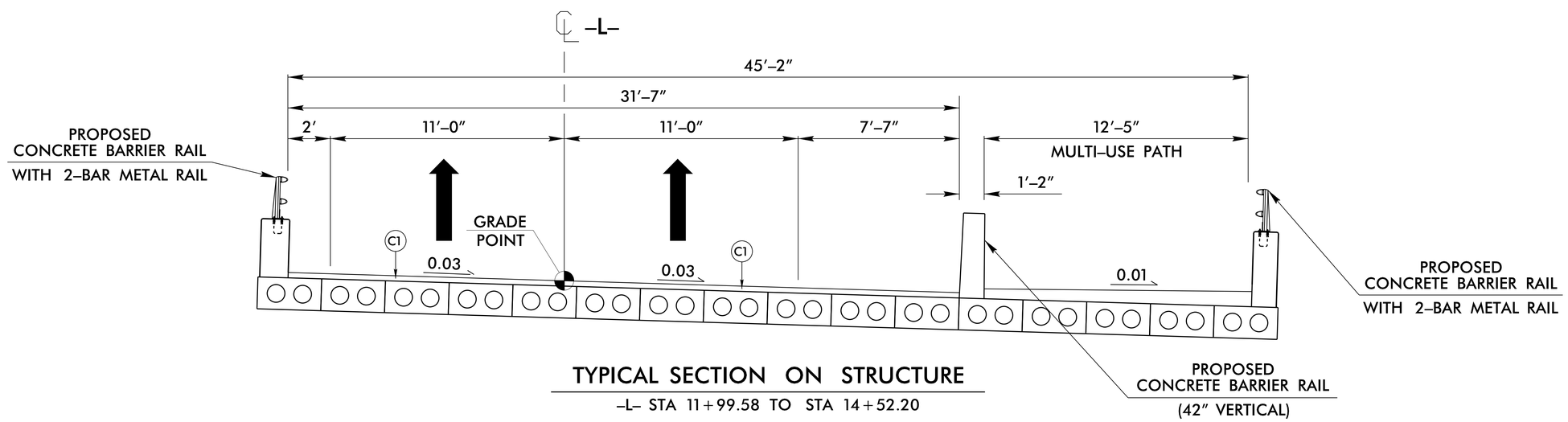

TYPICAL SECTION ON STRUCTURE
–L– STA 11+99.58 TO STA 14+52.20

5/28/99

16-MAY-2016 11:05
R:\Roadway\Proj\B5125_Rdy_typ.dgn
$$$$USERNAME$$$$