BILL OF MATERIAL

PHASE 1A C1-P1A

BAR	NO.	SIZE	TYPE	LENGTH	WEIGHT
A1	5413	#4	1	5'-8"	20490
A2	5413	#4	1	5'-4"	19285
A100	2494	#5	STR	9'-0"	23411
A110	2	#5	STR	6'-3"	13
A111	1	#5	STR	8'-3"	9
A200	2702	#6	STR	9'-0"	36526
A211	2	#6	STR	5'-4"	16
A212	1	#6	STR	5'-5"	8
B1	2709	#4	STR	7'-11"	14326
B2	5413	#4	STR	6'-4"	22901
C2	1764	#4	STR	29'-6"	34761
D1	48	#6	STR	3'-0"	216
E1	32	#5	STR	3'-8"	122
E2	16	#5	STR	4'-0"	67
E3	16	#5	STR	5'-2"	86
E4	32	#5	STR	5'-9"	192

REINFORCING STEEL = 172,429 LBS.

BAR TYPE

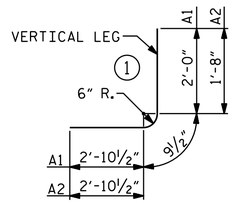

BAR DIMENSIONS ARE OUT TO OUT

SPLICE LENGTH CHART

BAR	SIZE	SPLICE LENGTH
"C"	#4	1'-11"

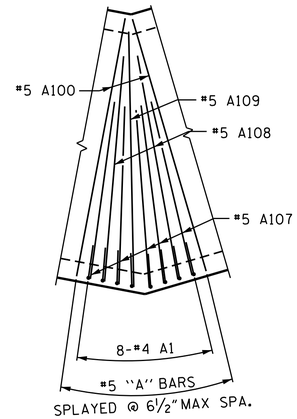

DETAIL D
ROOF SLAB

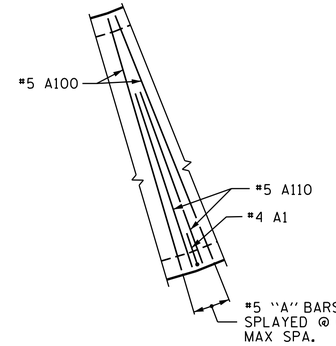

DETAIL E
ROOF SLAB

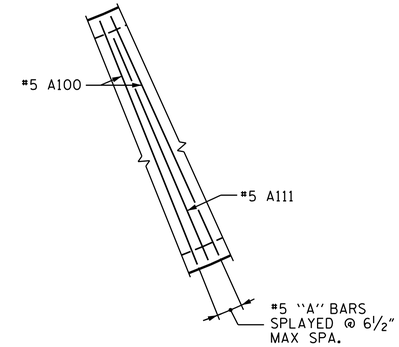

DETAIL F
ROOF SLAB

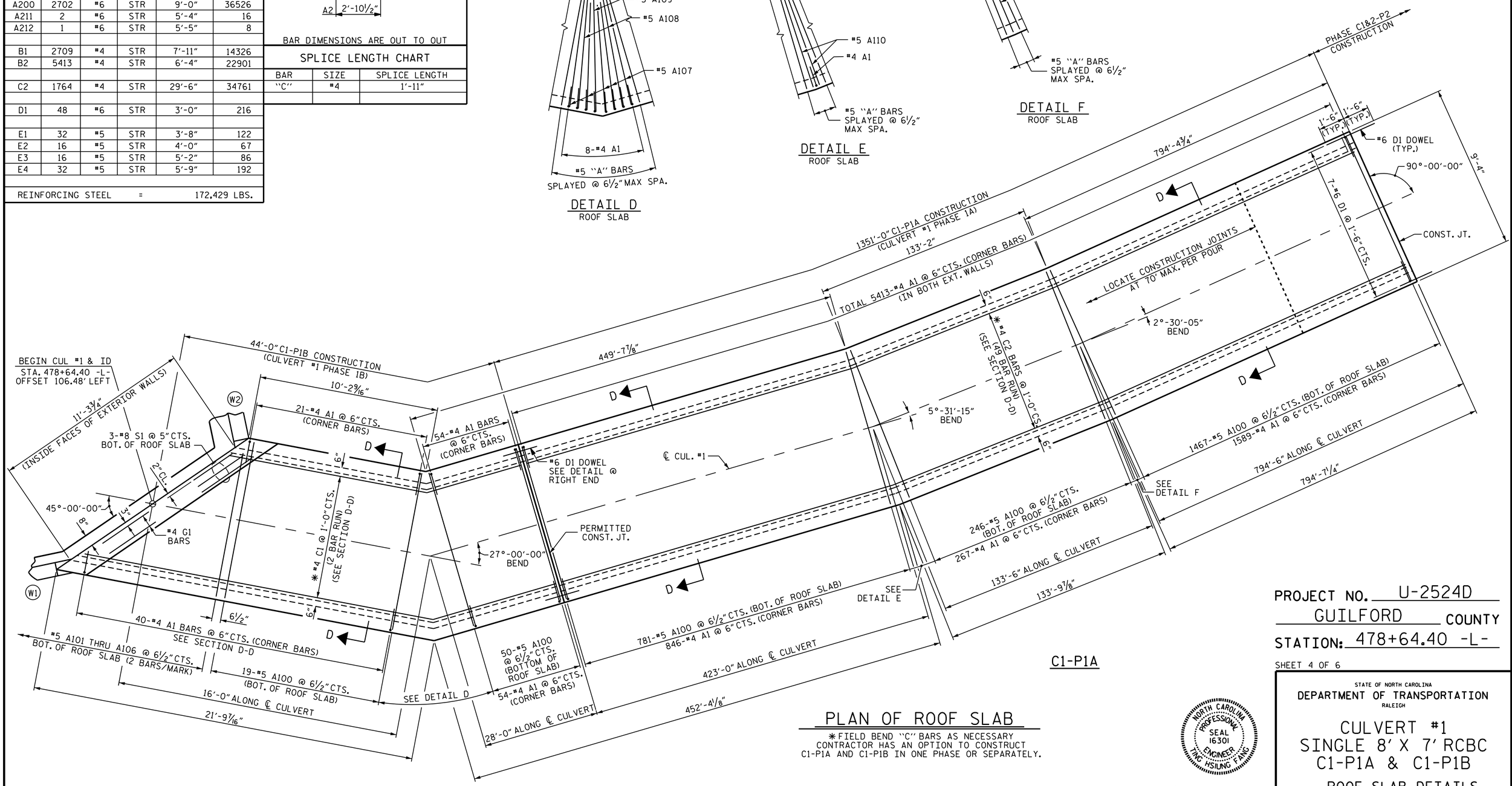

C1-P1A

C1-P1B

PLAN OF ROOF SLAB

* FIELD BEND "C" BARS AS NECESSARY
CONTRACTOR HAS AN OPTION TO CONSTRUCT
C1-P1A AND C1-P1B IN ONE PHASE OR SEPARATELY.

PROJECT NO. U-2524D
GUILFORD COUNTY
STATION: 478+64.40 -L-

SHEET 4 OF 6

STATE OF NORTH CAROLINA
DEPARTMENT OF TRANSPORTATION
RALEIGH

CULVERT #1
SINGLE 8' X 7' RCBC
C1-P1A & C1-P1B

ROOF SLAB DETAILS

NORTH CAROLINA PROFESSIONAL SEAL 16301 ENGINEER TING HSIUNG FANG

DocuSigned by: Ting Fang E72088400977435... 7/15/2016

DOCUMENT NOT CONSIDERED FINAL UNLESS ALL SIGNATURES COMPLETED

REVISIONS						
NO.	BY:	DATE:	NO.	BY:	DATE:	
1			3			
2			4			

SHEET NO. C-4
TOTAL SHEETS 34

CUL #1

DRAWN BY : A. SORSENGINH DATE : 1/2016
CHECKED BY : T. H. FANG DATE : 5/15/16
DESIGN ENGINEER OF RECORD: A. SORSENGINH DATE : 5/26/16

15-JUL-2016 08:10
K:\TIPProjects-U\U2524D\Structures\Plans\culvert\u2524d_sd_cul1.dgn
ttfang