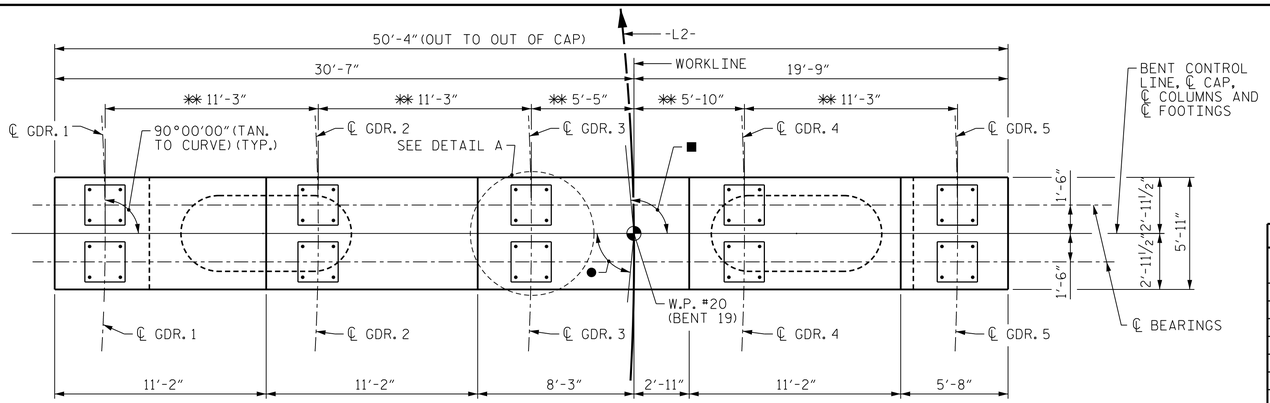

PLAN

■ 92°53'09" TO SHORT CHORD (AHEAD)
● 87°06'52" TO SHORT CHORD (BACK)

✱✱ MEASURED ALONG BENT CONTROL LINE (BENT 19 SHOWN, FOR CAP PLANS OF BENTS 20, 21 AND 22, SEE SHEET 5 OF 5)

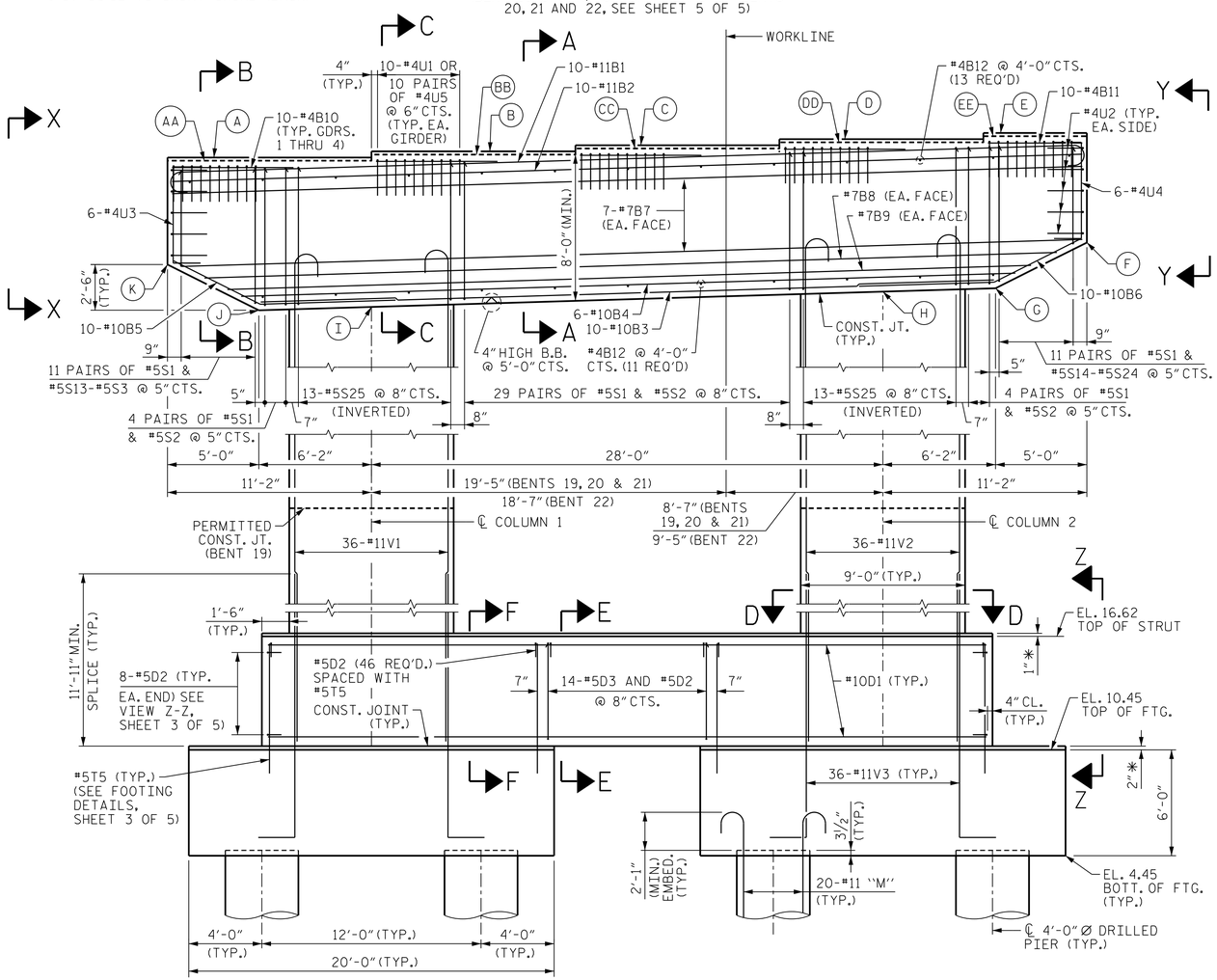

ELEVATION

FOOTING REINFORCEMENT NOT SHOWN FOR CLARITY, SEE SHEET 3 OF 5.

FOR CAP SECTION AT BENT 22, SEE PARTIAL SECTION ON SHEET 2 OF 5.

ELEVATION TABLE																
BENT	A	B	C	D	E	F	G	H	I	J	K	AA	BB	CC	DD	EE
19	49.69	50.03	50.37	50.70	51.04	45.11	42.61	42.42	41.58	41.39	43.89	49.58	49.92	50.26	50.60	50.93
20	44.54	44.88	45.21	45.55	45.89	40.07	37.58	37.39	36.54	36.35	38.85	--	--	--	--	--
21	38.27	38.61	38.95	39.29	39.62	33.80	31.30	31.11	30.27	30.08	32.58	--	--	--	--	--
22	33.49	33.83	34.17	34.50	34.84	28.83	26.33	26.14	25.30	25.12	27.62	33.30	33.63	33.97	34.31	34.64

BAR QUANTITY		
LOCATION	QUANTITY "A"	QUANTITY "B"
BENT 19 COLUMN 1	38	25
BENT 19 COLUMN 2	38	26
BENT 20 COLUMN 1	52	--
BENT 20 COLUMN 2	54	--
BENT 21 COLUMN 1	40	--
BENT 21 COLUMN 2	41	--
BENT 22 COLUMN 1	30	--
BENT 22 COLUMN 2	31	--

NOTES:

STIRRUPS AND "U" BARS IN CAP MAY BE SHIFTED, AS NECESSARY TO CLEAR ANCHOR BOLTS.

HOOKS ON "V" AND "M" BARS MAY BE TURNED AS NECESSARY FOR PLACING REINFORCING STEEL.

"T" BARS IN FOOTING MAY BE SHIFTED AS NECESSARY TO CLEAR COLUMN AND DRILLED PIER REINFORCEMENT.

FOR FOUNDATION NOTES, SEE "FOUNDATION NOTES" SHEET.

FOR SECTIONS AND VIEWS, SEE SHEET 2 OF 5 AND SHEET 3 OF 5.

FOR FOOTING AND DRILLED PIER REINFORCING DETAILS, SEE SHEET 3 OF 5 AND SHEET 4 OF 5.

✱ FOOTING AND STRUT ARE SLOPED TO DRAIN.

ALL STEEL IN THE DRILLED PIERS IS INCLUDED IN THE PAY ITEMS FOR "EPOXY COATED REINFORCING STEEL" AND "EPOXY COATED SPIRAL COLUMN REINFORCING STEEL".

THE CONTRACTOR'S ATTENTION IS CALLED TO THE FACT THAT THE LONGITUDINAL REINFORCEMENT FOR THE DRILLED PIERS ARE DETAILED WITH 3 FEET OF EXTRA LENGTH.

NO SEPARATE PAYMENT SHALL BE MADE FOR ANY ADDITIONAL STEEL REQUIRED IN CONSTRUCTION OF THE DRILLED PIER AS THIS IS CONSIDERED INCIDENTAL TO THE LINEAR FOOT PRICE FOR DRILLED PIER.

FOR MASS CONCRETE, SEE SPECIAL PROVISIONS.

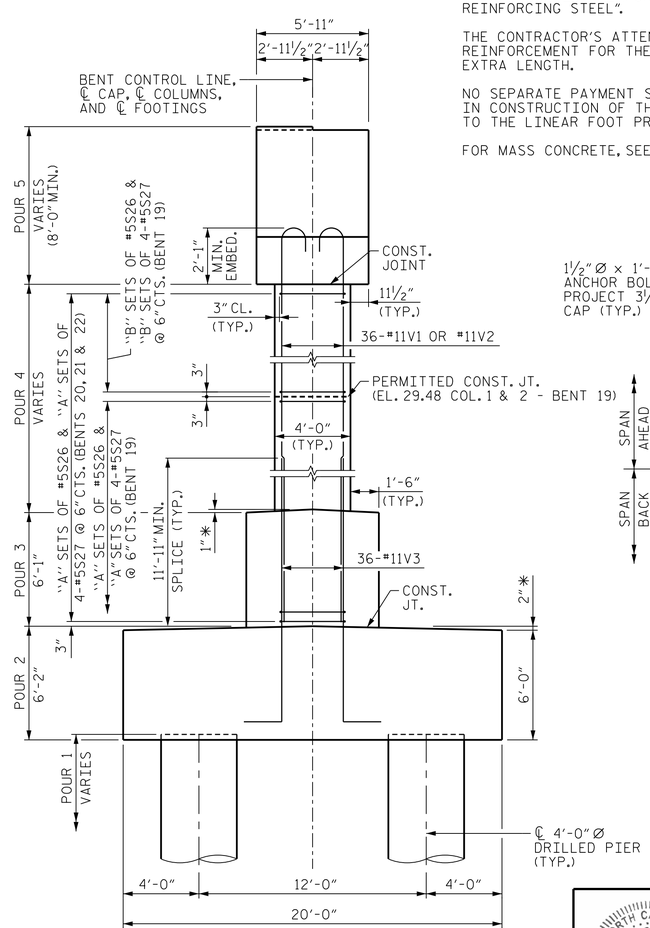

END VIEW

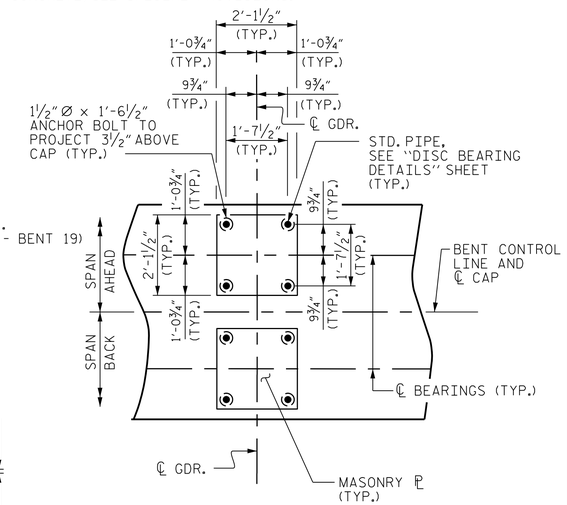

DETAIL A

PROJECT NO. B-4929

PENDER COUNTY

STATION: 38+13.81 -L2-

SHEET 1 OF 5 STEEL ALTERNATE

STATE OF NORTH CAROLINA
DEPARTMENT OF TRANSPORTATION
RALEIGH

SUBSTRUCTURE

BENTS 19 THROUGH 22 PLAN AND ELEVATION

PARSONS BRINCKERHOFF
434 FAYETTEVILLE STREET
SUITE 1500
RALEIGH, NC 27601
LICENSE NO. F-0165

NORTH CAROLINA PROFESSIONAL SEAL 032967 ENGINEER JASON R. DOUGHTY
5/12/16
DocuSigned by: Jason R Doughty
00F1C86448274F7...

DOCUMENT NOT CONSIDERED FINAL UNLESS ALL SIGNATURES COMPLETED

DESIGNED BY:	J. BORUTA	DATE :	MAR 2016
DRAWN BY:	K. WHITE	DATE :	MAR 2016
CHECKED BY:	J. DOUGHTY	DATE :	APR 2016
DESIGN ENGINEER OF RECORD:	J. DOUGHTY	DATE :	MAY 2016

REVISIONS						SHEET NO.
NO.	BY:	DATE:	NO.	BY:	DATE:	S-274
1			3			TOTAL SHEETS
2			4			278

5/12/2016
401_125_B4929_SMU_IB19_1s.dgn