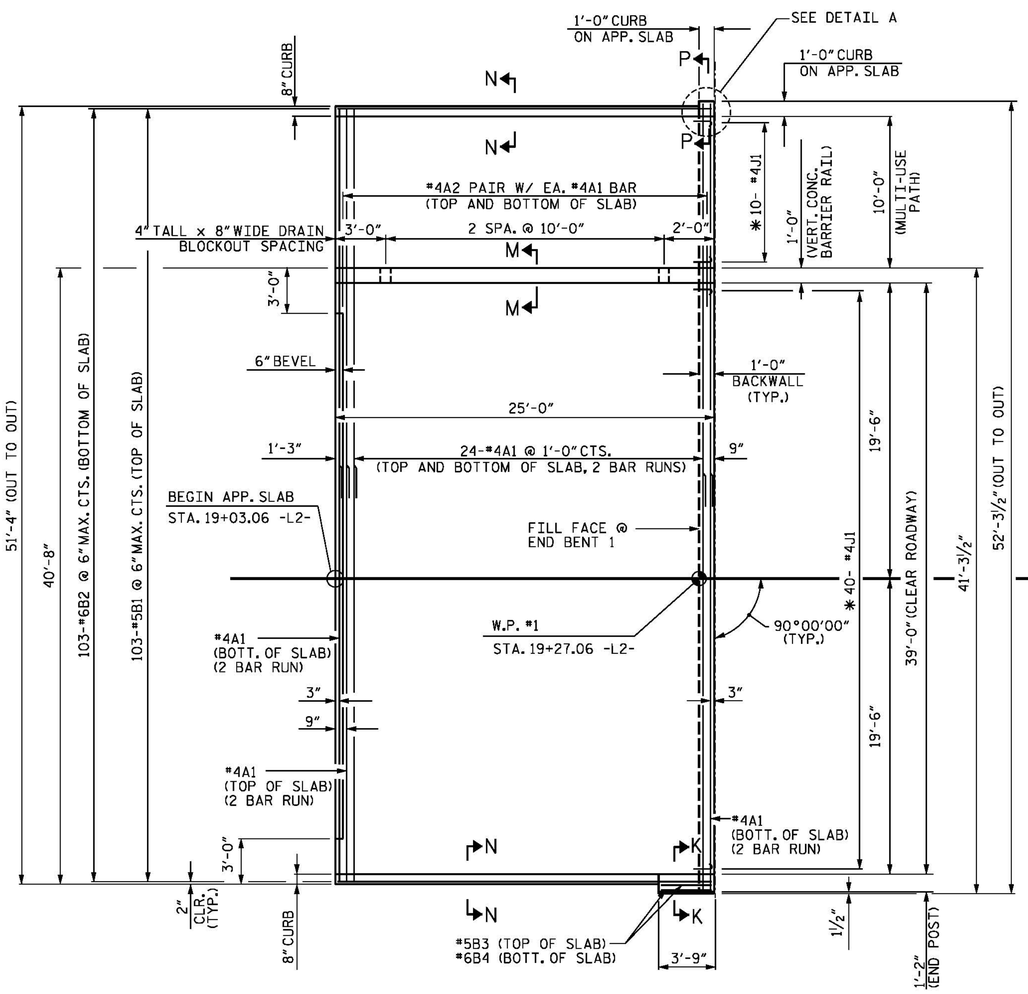

PLAN @ END BENT 1

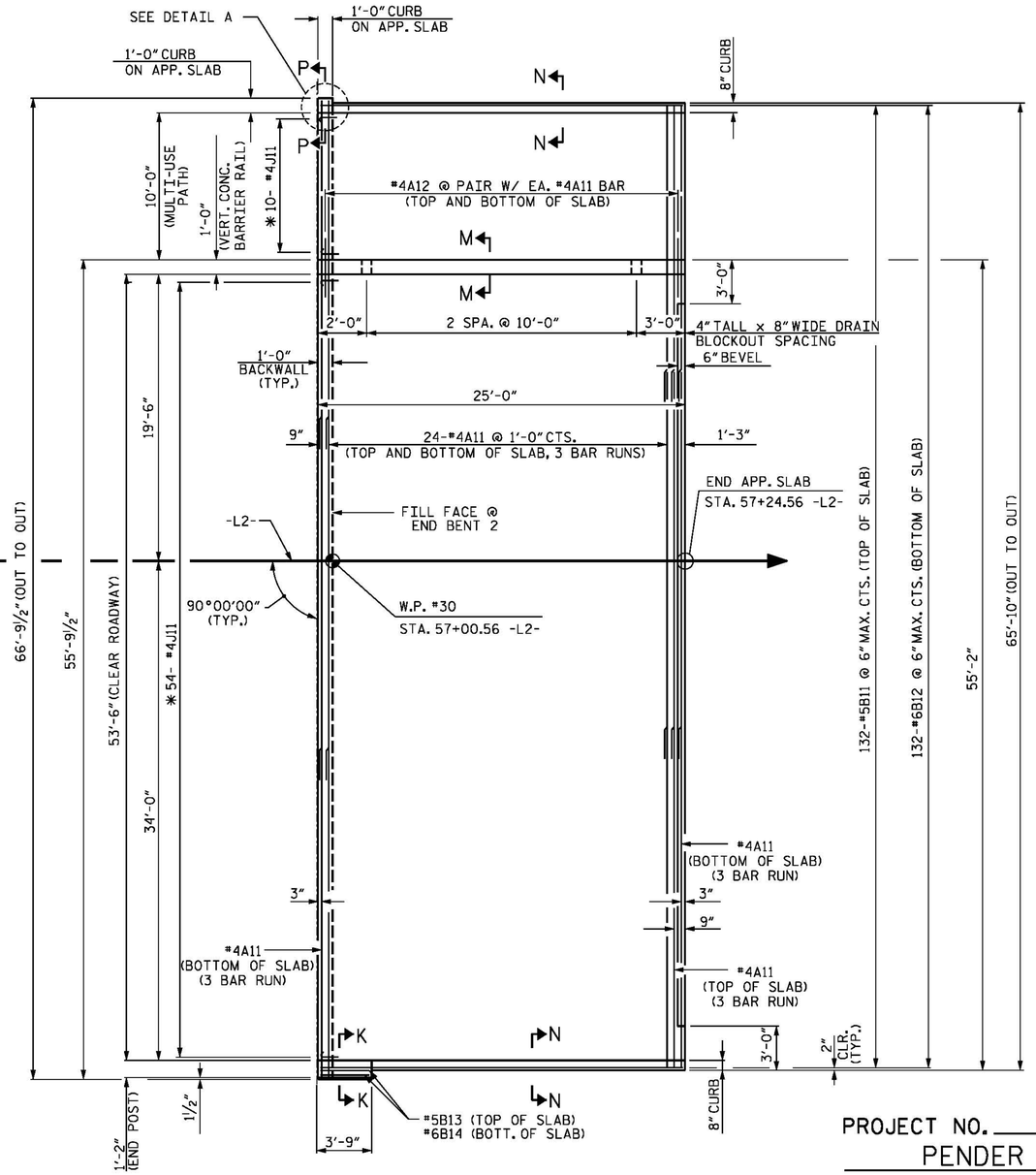

PLAN @ END BENT 2

* THE QUANTITY OF #4J1 BARS ON THE BILL OF MATERIAL IS BASED ON 1'-0" CENTERS. J1 BARS SHALL BE PLACED AT EACH VERTICAL STUD ANCHOR BOLT. IN THE EVENT THAT THE NUMBER OF VERTICAL STUD ANCHORS EXCEEDS THE NUMBER OF J1 BARS SPECIFIED, ADDITIONAL J1 BARS WILL NOT BE REQUIRED.

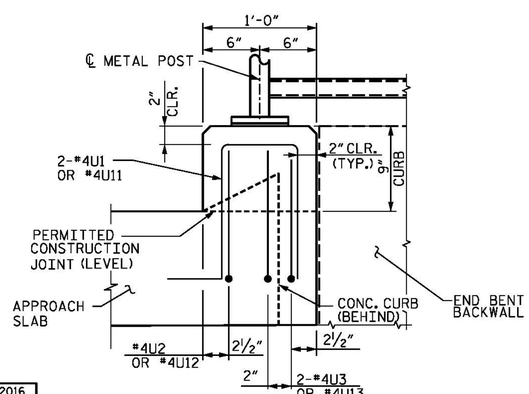

SECTION A-A

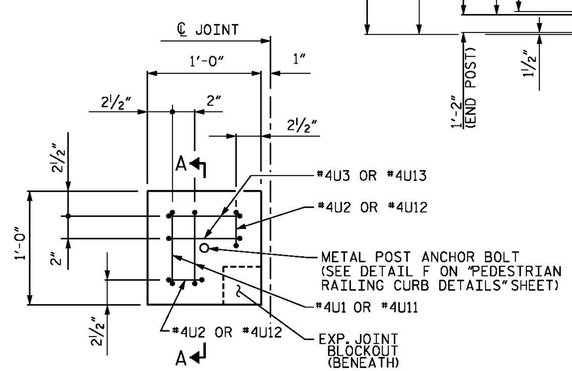

DETAIL A

(END BENT 1 SIDE SHOWN, END BENT 2 SIDE SIMILAR. END BENT BACKWALL NOT SHOWN FOR CLARITY. SEE END BENT SHEETS FOR ADDITIONAL INFORMATION.)

NOTE: FOR SECTION K-K, M-M, N-N AND P-P SEE SHEET 2 OF 3.

PROJECT NO. B-4929

PENDER COUNTY

STATION: 38+13.81 -L2-

SHEET 1 OF 3

STATE OF NORTH CAROLINA
DEPARTMENT OF TRANSPORTATION
RALEIGH

BRIDGE APPROACH SLAB FOR FLEXIBLE PAVEMENT

NORTH CAROLINA PROFESSIONAL SEAL 032967 ENGINEER JASON R. DOUGHTY
5/12/16
DocuSigned by: Jason R Doughty
00F1C86448274F7...

PARSONS BRINCKERHOFF
434 FAYETTEVILLE STREET
SUITE 1500
RALEIGH, NC 27601
LICENSE NO. F-0165

DOCUMENT NOT CONSIDERED FINAL UNLESS ALL SIGNATURES COMPLETED

REVISIONS								SHEET NO.
NO.	BY:	DATE:	NO.	BY:	DATE:			S-207
1			3					TOTAL SHEETS
2			4					278

DESIGNED BY:	E. DAVIS	DATE :	JAN. 2016
DRAWN BY:	B. CALDWELL	DATE :	JAN. 2016
CHECKED BY:	J. SHERMAN	DATE :	FEB. 2016
DESIGN ENGINEER OF RECORD:	J. DOUGHTY	DATE :	MAY 2016

5/11/2016
400_407_B4929_SMU_AS1.dgn