## NOTES

FOR NOTES, SEE SHEET 1 OF 5.

FOR BAR TYPES, SEE SHEET 5 OF 5.

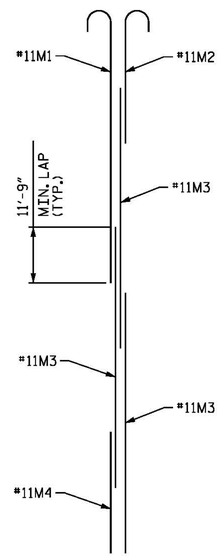


## DETAIL A

ONE BUNDLE SHOWN, REINFORCING STEEL IS TYPICAL FOR EACH BUNDLE.

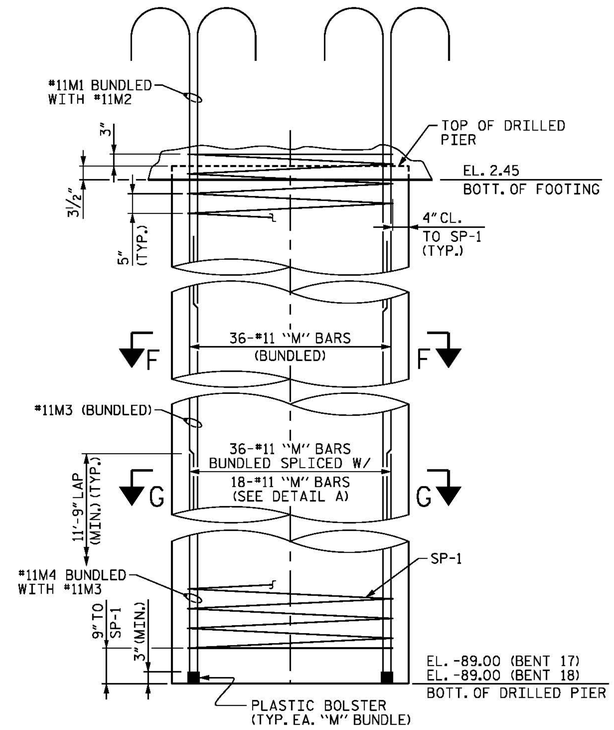


## DRILLED PIER ELEVATION

## BILL OF MATERIAL

### BENT 17

| BAR | NUMBER | SIZE | TYPE | LENGTH | WEIGHT | BAR | NUMBER | SIZE | TYPE | LENGTH | WEIGHT |
|---|---|---|---|---|---|---|---|---|---|---|---|
| B1 | 10 | #11 | 1 | 53'-0" | 2816 | T1 | 93 | #9 | STR | 54'-4" | 17180 |
| B2 | 10 | #11 | STR | 49'-10" | 2648 | T2 | 134 | #9 | STR | 24'-4" | 11086 |
| B3 | 8 | #10 | STR | 40'-4" | 1388 | T3 | 83 | #6 | STR | 24'-4" | 3034 |
| B4 | 6 | #10 | STR | 42'-0" | 1084 | T4 | 20 | #6 | STR | 54'-4" | 1632 |
| B5 | 8 | #10 | 2 | 10'-0" | 344 | T5 | 138 | #5 | STR | 7'-2" | 1032 |
| B6 | 8 | #10 | 3 | 10'-0" | 344 | T6 | 316 | #5 | 9 | 8'-6" | 2801 |
| B7 | 14 | #7 | STR | 49'-10" | 1426 | | | | | | |
| B8 | 2 | #7 | STR | 47'-4" | 193 | U1 | 50 | #4 | 9 | 8'-6" | 284 |
| B9 | 2 | #7 | STR | 44'-8" | 183 | U2 | 10 | #4 | 9 | 7'-4" | 49 |
| B10 | 40 | #4 | STR | 6'-3" | 167 | U3 | 5 | #4 | 9 | 8'-2" | 27 |
| B11 | 10 | #4 | STR | 5'-2" | 35 | U4 | 5 | #4 | 9 | 8'-0" | 27 |
| B12 | 24 | #4 | STR | 4'-6" | 72 | | | | | | |
| | | | | | | V1 | 36 | #11 | 4 | 45'-8" | 8735 |
| D1 | 26 | #6 | STR | 39'-4" | 1536 | V2 | 36 | #11 | 4 | 46'-6" | 8894 |
| D2 | 48 | #5 | 9 | 10'-4" | 517 | V3 | 72 | #11 | 8 | 21'-2" | 8097 |
| M1 | 144 | #11 | 4 | 46'-2" | 35321 | | | | | | |
| M2 | 144 | #11 | 4 | 21'-10" | 16704 | | | | | | |
| M3 | 432 | #11 | STR | 50'-0" | 114761 | | | | | | |
| M4 | 144 | #11 | STR | 25'-8" | 19637 | | | | | | |
| S1 | 110 | #5 | 5 | 4'-1" | 468 | | | | | | |
| S2 | 66 | #5 | 6 | 19'-0" | 1308 | | | | | | |
| S3 | 2 | #5 | 6 | 18'-9" | 39 | | | | | | |
| S4 | 2 | #5 | 6 | 18'-4" | 38 | | | | | | |
| S5 | 2 | #5 | 6 | 17'-11" | 37 | | | | | | |
| S6 | 2 | #5 | 6 | 17'-5" | 36 | | | | | | |
| S7 | 2 | #5 | 6 | 17'-0" | 35 | | | | | | |
| S8 | 2 | #5 | 6 | 16'-7" | 35 | | | | | | |
| S9 | 2 | #5 | 6 | 16'-2" | 34 | | | | | | |
| S10 | 2 | #5 | 6 | 15'-8" | 33 | SP-1 | 8 | * | 10 | 2,987'-1" | 24,924 |
| S11 | 2 | #5 | 6 | 15'-3" | 32 | | | | | | |
| S12 | 2 | #5 | 6 | 14'-10" | 31 | | | | | | |
| S13 | 2 | #5 | 6 | 14'-5" | 30 | | | | | | |
| S14 | 2 | #5 | 6 | 18'-11" | 39 | | | | | | |
| S15 | 2 | #5 | 6 | 18'-7" | 39 | | | | | | |
| S16 | 2 | #5 | 6 | 18'-3" | 38 | | | | | | |
| S17 | 2 | #5 | 6 | 17'-9" | 37 | | | | | | |
| S18 | 2 | #5 | 6 | 17'-5" | 36 | | | | | | |
| S19 | 2 | #5 | 6 | 17'-0" | 35 | | | | | | |
| S20 | 2 | #5 | 6 | 16'-7" | 35 | | | | | | |
| S21 | 2 | #5 | 6 | 16'-3" | 34 | | | | | | |
| S22 | 2 | #5 | 6 | 15'-10" | 33 | | | | | | |
| S23 | 2 | #5 | 6 | 15'-5" | 32 | | | | | | |
| S24 | 2 | #5 | 6 | 15'-0" | 31 | | | | | | |
| S25 | 24 | #5 | 6 | 20'-4" | 509 | | | | | | |
| S26 | 336 | #5 | 7 | 14'-1" | 4935 | | | | | | |
| S27 | 672 | #5 | 11 | 4'-6" | 3154 | | | | | | |

EPOXY COATED REINFORCING STEEL LBS. 273,197

EPOXY COATED SPIRAL COLUMN REINFORCING STEEL LBS. 24,924

CLASS "AA" CONCRETE BREAKDOWN

| | | |
|---|---|---|
| POUR #2 - FOOTING | C.Y. | 412.4 |
| POUR #3 - STRUT | C.Y. | 61.5 |
| POUR #4 - COLUMNS | C.Y. | 87.6 |
| POUR #5 - CAP | C.Y. | 74.0 |
| CLASS "AA" CONCRETE | C.Y. | 635.5 |

5'-0" Ø DRILLED PIERS QUANTIES:

| | | |
|---|---|---|
| DRILLED PIER | LIN. FT. | 733.9 |
| POUR 1 - DRILLED PIER | C.Y. | 533.8 |
| PERMANENT STEEL CASING FOR 5'-0" Ø DRILLED PIERS | LIN. FT. | 197.9 |
| CSL TUBES | LIN. FT. | 3,730 |

* THE SP-1 SPIRAL REINFORCING STEEL SHALL BE W31 OR D-31 COLD DRAWN WIRE OR #5 PLAIN DEFORMED BAR.

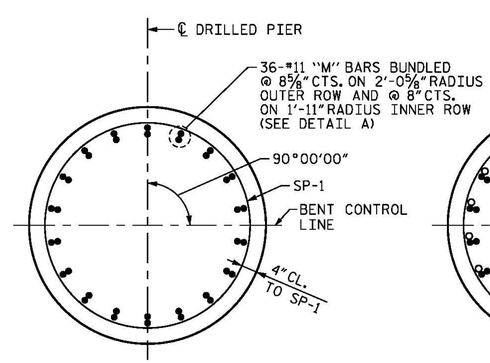


## SECTION F-F

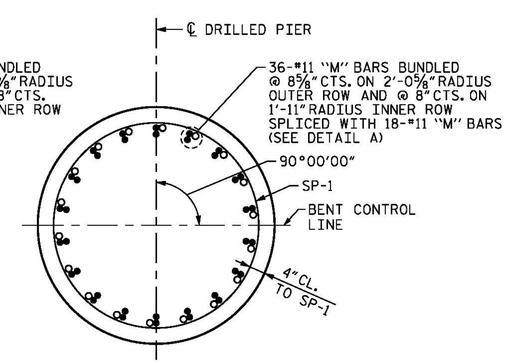


## SECTION G-G

PROJECT NO. B-4929

PENDER COUNTY

STATION: 38+13.81 -L2-

SHEET 4 OF 5

STATE OF NORTH CAROLINA
DEPARTMENT OF TRANSPORTATION
RALEIGH

SUBSTRUCTURE

# BENTS 17 AND 18 BILL OF MATERIALS

PARSONS BRINCKERHOFF
434 FAYETTEVILLE STREET
SUITE 1500
RALEIGH, NC 27601
LICENSE NO. F-0165

NORTH CAROLINA PROFESSIONAL SEAL 032967 ENGINEER JASON R. DOUGHTY
5/12/16
DocuSigned by: Jason R Doughty
00F1C86448274F7...

DOCUMENT NOT CONSIDERED FINAL UNLESS ALL SIGNATURES COMPLETED

| REVISIONS | | | | | | SHEET NO. |
|---|---|---|---|---|---|---|
| NO. | BY: | DATE: | NO. | BY: | DATE: | S-183 |
| 1 | | | 3 | | | TOTAL SHEETS |
| 2 | | | 4 | | | 278 |

| | | | |
|---|---|---|---|
| DESIGNED BY: | E. ULLMER | DATE : | MAR 2016 |
| DRAWN BY: | M. HOBBS | DATE : | MAR 2016 |
| CHECKED BY: | B. LOFLIN | DATE : | MAR 2016 |
| DESIGN ENGINEER OF RECORD: | J. DOUGHTY | DATE : | MAY 2016 |

5/10/2016
400_359_B4929_SMU_TB17_4.dgn