NOTES

FOR NOTES, SEE SHEET 1 OF 5.

FOR BAR TYPES, SEE SHEET 5 OF 5.

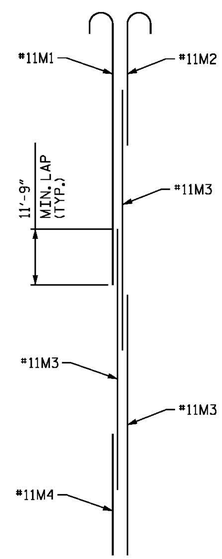

DETAIL A

ONE BUNDLE SHOWN, REINFORCING STEEL IS TYPICAL FOR EACH BUNDLE.

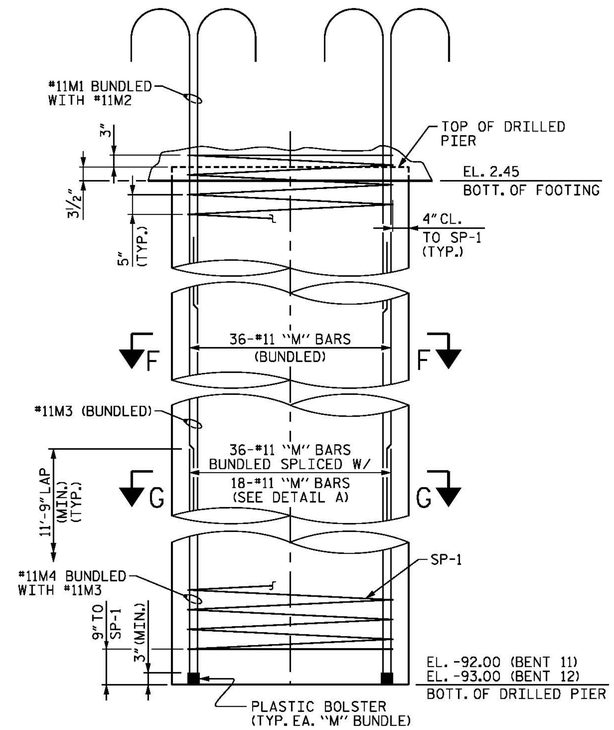

DRILLED PIER ELEVATION

BILL OF MATERIAL

BENT 11

BAR	NUMBER	SIZE	TYPE	LENGTH	WEIGHT	BAR	NUMBER	SIZE	TYPE	LENGTH	WEIGHT
B1	10	#11	1	53'-0"	2816	T1	93	#9	STR	54'-4"	17180
B2	10	#11	STR	49'-10"	2648	T2	134	#9	STR	24'-4"	11086
B3	8	#10	STR	40'-4"	1388	T3	83	#6	STR	24'-4"	3034
B4	6	#10	STR	42'-0"	1084	T4	20	#6	STR	54'-4"	1632
B5	16	#10	2	10'-3"	706	T5	138	#5	STR	7'-2"	1032
B6	14	#7	STR	49'-10"	1426	T6	316	#5	7	8'-6"	2801
B7	2	#7	STR	47'-4"	193						
B8	2	#7	STR	44'-8"	183	U1	66	#4	7	8'-6"	375
B9	10	#4	STR	10'-11"	73	U2	10	#4	7	7'-4"	49
B10	10	#4	STR	27'-6"	184	U3	5	#4	7	7'-9"	26
B11	24	#4	STR	4'-6"	72	U4	5	#4	7	8'-4"	28
D1	26	#6	STR	39'-4"	1536	V1	72	#11	3	37'-0"	14154
D2	48	#5	7	10'-4"	517	V2	72	#11	9	21'-2"	8097
M1	144	#11	3	46'-2"	35321						
M2	144	#11	3	24'-8"	18872						
M3	432	#11	STR	50'-0"	114761						
M4	144	#11	STR	28'-8"	21932						
S1	110	#5	4	4'-1"	468						
S2	66	#5	4	19'-0"	1308						
S3	4	#5	5	18'-11"	79						
S4	4	#5	5	18'-6"	77						
S5	4	#5	5	18'-1"	75						
S6	4	#5	5	17'-8"	74						
S7	4	#5	5	17'-3"	72						
S8	4	#5	5	16'-10"	70						
S9	4	#5	5	16'-5"	68						
S10	4	#5	5	16'-0"	67						
S11	4	#5	5	15'-7"	65						
S12	4	#5	5	15'-2"	63						
S13	4	#5	5	14'-9"	62						
S14	24	#5	5	20'-4"	509						
S15	132	#5	6	14'-1"	1939						
S16	264	#5	10	4'-6"	1239						

EPOXY COATED REINFORCING STEEL LBS. 269,441

SP-1	8	*	8	3,084'-0"	25,733

EPOXY COATED SPIRAL COLUMN REINFORCING STEEL LBS. 25,733

CLASS "AA" CONCRETE BREAKDOWN

POUR #2 - FOOTING	C.Y.	412.4
POUR #3 - STRUT	C.Y.	61.5
POUR #4 - COLUMNS	C.Y.	66.0
POUR #5 - CAP	C.Y.	75.0
CLASS "AA" CONCRETE	C.Y.	614.9

5'-0" Ø DRILLED PIERS QUANTIES:

DRILLED PIER	LIN. FT.	757.9
POUR 1 - DRILLED PIER	C.Y.	551.2
PERMANENT STEEL CASING FOR 5'-0" Ø DRILLED PIERS	LIN. FT.	197.9
CSL TUBES	LIN. FT.	3,850

* THE SP-1 SPIRAL REINFORCING STEEL SHALL BE W31 OR D-31 COLD DRAWN WIRE OR #5 PLAIN DEFORMED BAR.

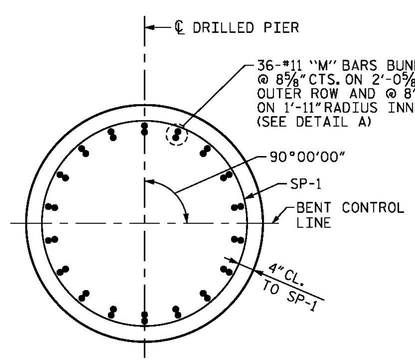

SECTION F-F

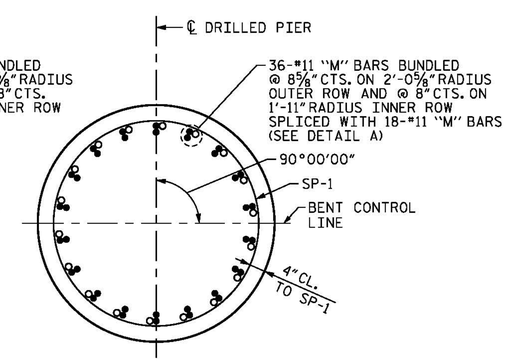

SECTION G-G

PROJECT NO. B-4929

PENDER COUNTY

STATION: 38+13.81 -L2-

SHEET 4 OF 5

STATE OF NORTH CAROLINA
DEPARTMENT OF TRANSPORTATION
RALEIGH

SUBSTRUCTURE

BENTS 11 AND 12 BILL OF MATERIALS

NORTH CAROLINA PROFESSIONAL SEAL 032967 ENGINEER JASON R. DOUGHTY
5/12/16
DocuSigned by: Jason R Doughty
00F1C86448274F7...

PARSONS BRINCKERHOFF
434 FAYETTEVILLE STREET
SUITE 1500
RALEIGH, NC 27601
LICENSE NO. F-0165

DOCUMENT NOT CONSIDERED FINAL UNLESS ALL SIGNATURES COMPLETED

REVISIONS							SHEET NO.
NO.	BY:	DATE:	NO.	BY:	DATE:		S-168
1			3				TOTAL SHEETS
2			4				278

DESIGNED BY:	E. ULLMER	DATE :	MAR 2016
DRAWN BY:	M. HOBBS	DATE :	MAR 2016
CHECKED BY:	B. LOFLIN	DATE :	MAR 2016
DESIGN ENGINEER OF RECORD:	J. DOUGHTY	DATE :	MAY 2016

5/10/2016
400_329_B4929_SMU_TB11_4.dgn