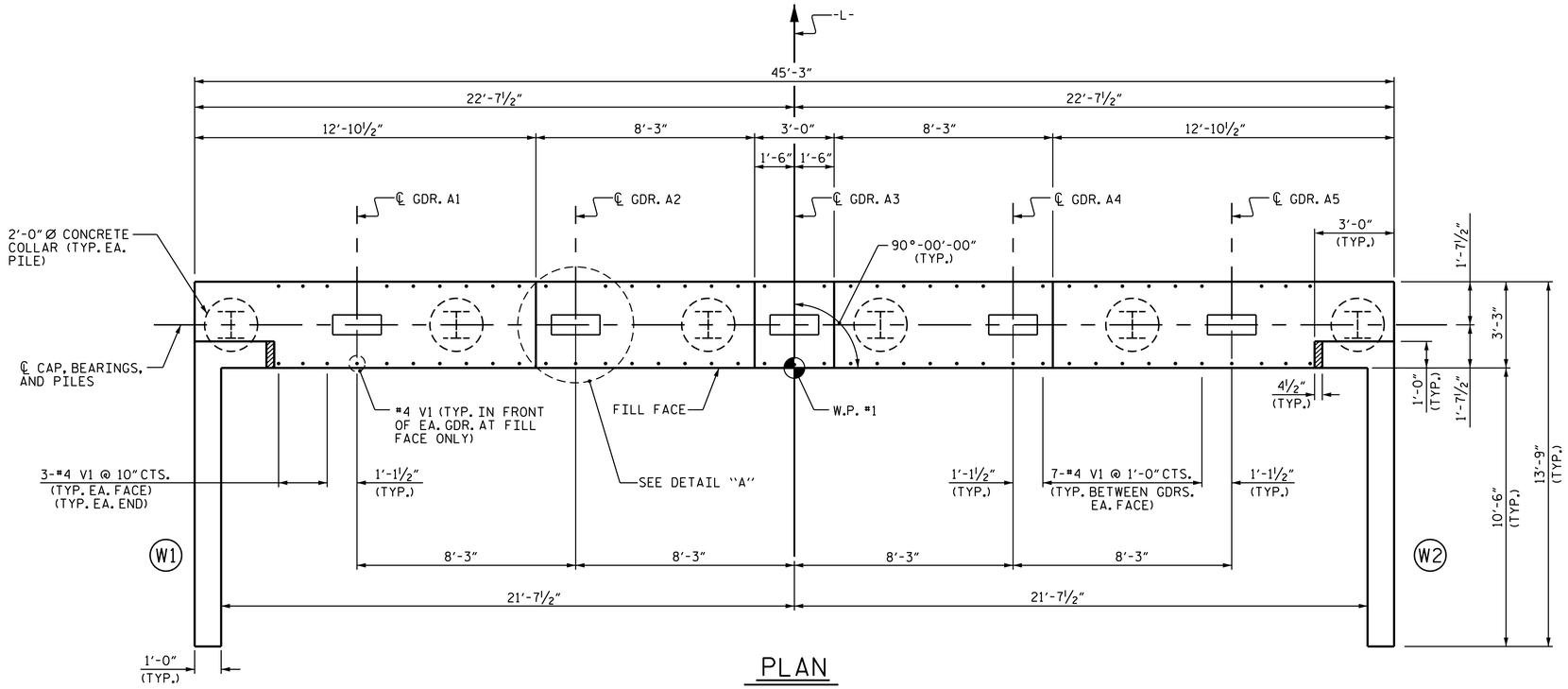

PLAN

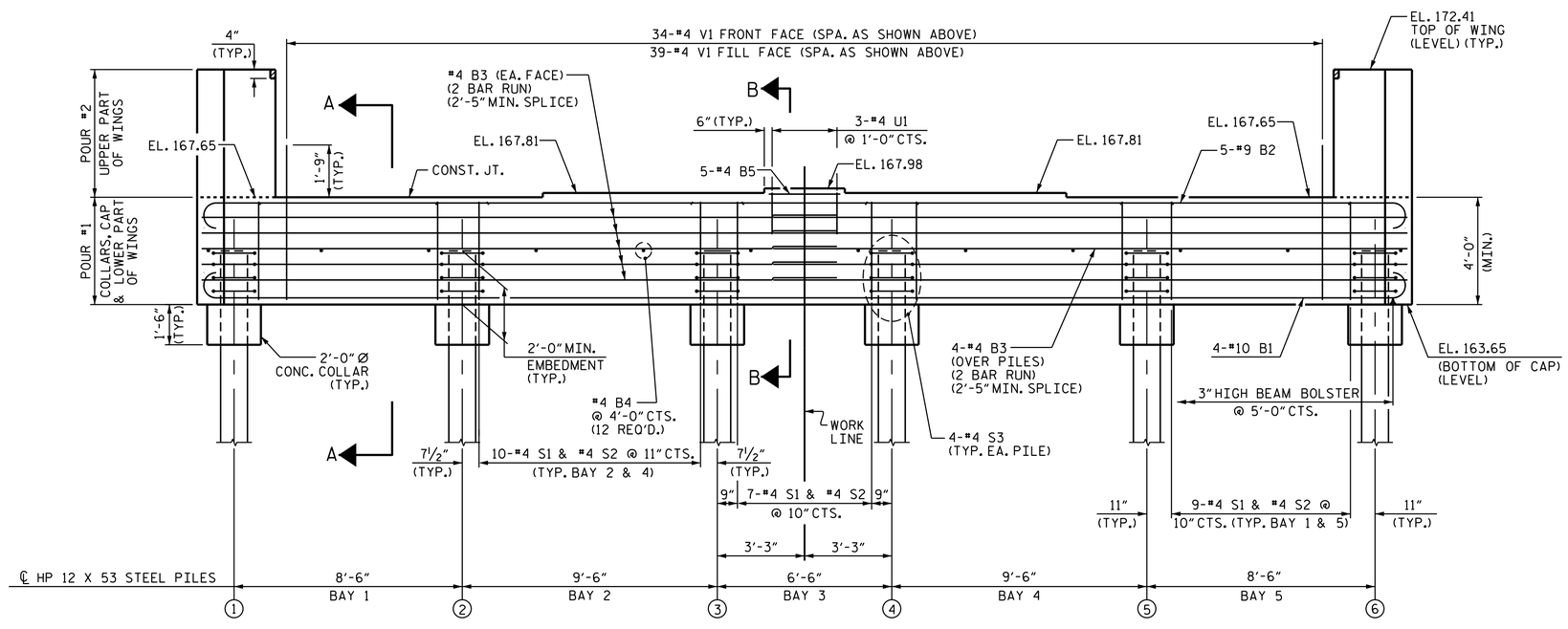

ELEVATION

NOTES

STIRRUPS IN CAP MAY BE SHIFTED AS NECESSARY TO CLEAR #4 V1 BARS.

THE TOP SURFACE OF THE END BENT CAP AND WINGS, EXCEPT THE BEARING AREA, SHALL BE RAKED TO A DEPTH OF ¼".

THE UPPER PORTION OF THE INTEGRAL END BENT SHALL BE POURED WITH THE SUPERSTRUCTURE. SEE SUPERSTRUCTURE PLANS.

THE CONCRETE IN THE SHADED AREA OF THE WING SHALL BE POURED AFTER THE CONCRETE BARRIER RAIL IS CAST IF SLIP FORMING IS USED.

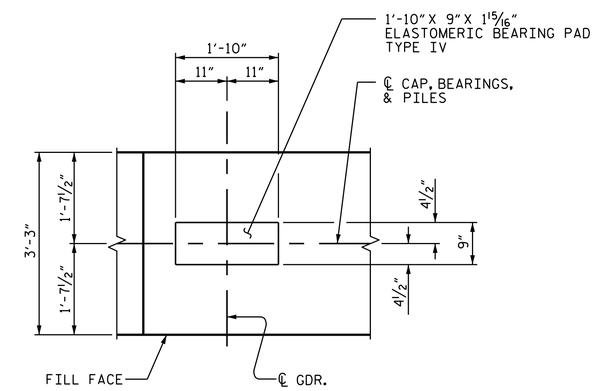

DETAIL "A"

(DETAILS AND DIMENSIONS ARE TYP. FOR EA. BEARING)

PROJECT NO. B-4761

HALIFAX COUNTY

STATION: 20+11.00 -L-

SHEET 1 OF 3

STATE OF NORTH CAROLINA
DEPARTMENT OF TRANSPORTATION
RALEIGH

SUBSTRUCTURE

INTEGRAL END BENT 1

NORTH CAROLINA PROFESSIONAL SEAL 025516 ENGINEER EMILY E. MURRAY

DocuSigned by: Emily E Murray
CAEB97AEDC584E0...
4/27/2016

DOCUMENT NOT CONSIDERED FINAL UNLESS ALL SIGNATURES COMPLETED

REVISIONS						SHEET NO.
NO.	BY:	DATE:	NO.	BY:	DATE:	S-20
1			3			TOTAL SHEETS
2			4			31

DRAWN BY : M.D.PISO DATE : 8-03-2015
CHECKED BY : D.G.ELY DATE : 8-25-2015
DESIGN ENGINEER OF RECORD: G. KOUCHEKI DATE : 3/14/16

27-APR-2016 11:25
R:\Structures\Plans\MDP\B-4761_SD_EB1.dgn
vpatel