| PROJECT REFERENCE NO. | SHEET NO. |
|---|---|
| W-5510 | UC-3C |

UTILITY CONSTRUCTION PLANS ONLY

NORTH CAROLINA PROFESSIONAL SEAL 024262 ENGINEER TODD M. LEWIS

Digitally Signed by Todd M. Lewis DN: cn=Todd M. Lewis, c=US, o=Professional Engineer, ou=NC Reg. No. 024262, email=todd.lewis@cityofws.org Date: 2016.07.14 08:42:02 -04'00'

5/14/99

REVISIONS

## STUB OUT INSTALLATION

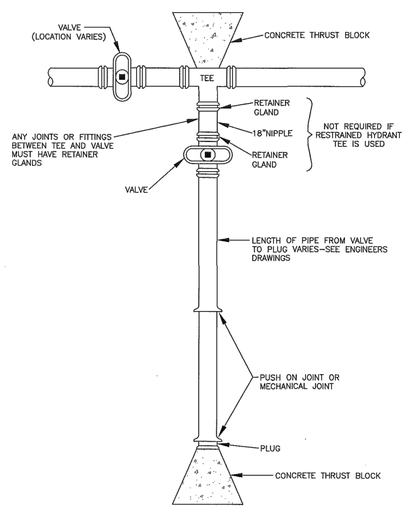


CITY OF WINSTON-SALEM
DEPARTMENT OF PUBLIC WORKS
ENGINEERING DIVISION

N.T.S. REVISED 9-20-01 APPROVED

R:\Data\Utility\Utility Spec Drawings/stub_out.dwg VII-42

## CONCRETE THRUST BLOCKS

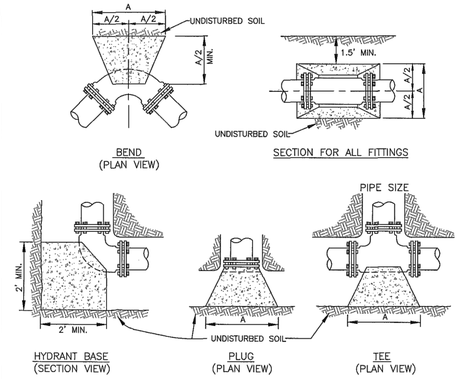


| FITTING | MINIMUM "A" DIMENSION (FEET) | | | | | | | | | |
|---|---|---|---|---|---|---|---|---|---|---|
| | PIPE SIZE (INCHES) | | | | | | | | | |
| | 2 | 4 | 6 | 8 | 12 | 16 | 20 | 24 | 30 | 36 |
| 90° BEND | 1.0 | 2.0 | 2.5 | 3.5 | 5.0 | 6.5 | 8.0 | 10.0 | 12.0 | 14.5 |
| 45° BEND | 1.0 | 1.5 | 2.0 | 2.5 | 4.0 | 5.0 | 6.0 | 7.0 | 9.0 | 10.5 |
| 22 1/2° BEND | 0.5 | 1.0 | 1.5 | 2.0 | 3.0 | 3.5 | 4.5 | 5.0 | 6.5 | 7.5 |
| 11 1/4° BEND | 0.5 | 1.0 | 1.0 | 1.5 | 2.0 | 2.5 | 3.0 | 4.0 | 4.5 | 5.5 |
| PLUG/TEE | 1.0 | 1.5 | 2.5 | 3.0 | 4.5 | 5.5 | 7.0 | 8.0 | 10.0 | 12.0 |

NOTE: ABOVE DIMENSIONS BASED ON THE FOLLOWING: 250 PSI WATER PRESSURE AND 2000 LB/SQ FT SOIL BEARING CAPACITY (SOFT CLAY)

CITY OF WINSTON-SALEM
DEPARTMENT OF PUBLIC WORKS
ENGINEERING DIVISION

N.T.S. REVISED 11-7-13 APPROVED

R:\Data\Utility\Utility Spec Drawings/conc_thrust_blocks2013.dwg VII-43

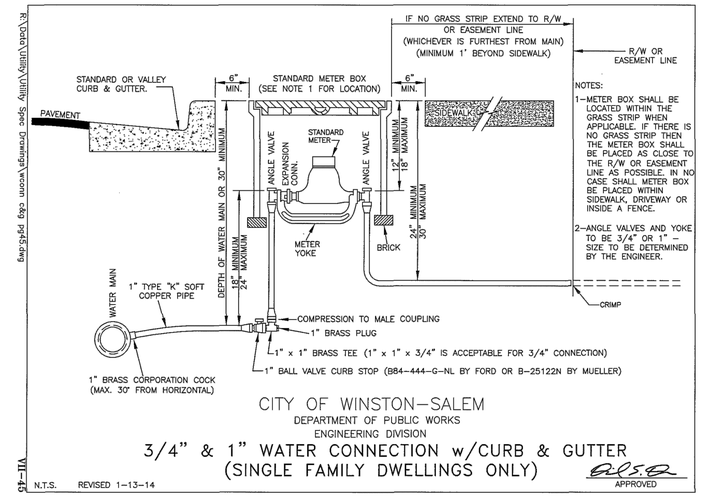


NOTES:
1-METER BOX SHALL BE LOCATED WITHIN THE GRASS STRIP WHEN APPLICABLE. IF THERE IS NO GRASS STRIP THEN THE METER BOX SHALL BE PLACED AS CLOSE TO THE R/W OR EASEMENT LINE AS POSSIBLE. IN NO CASE SHALL METER BOX BE PLACED WITHIN SIDEWALK, DRIVEWAY OR INSIDE A FENCE.
2-ANGLE VALVES AND YOKE TO BE 3/4" OR 1" - SIZE TO BE DETERMINED BY THE ENGINEER.

CITY OF WINSTON-SALEM
DEPARTMENT OF PUBLIC WORKS
ENGINEERING DIVISION

## 3/4" & 1" WATER CONNECTION w/CURB & GUTTER (SINGLE FAMILY DWELLINGS ONLY)

N.T.S. REVISED 1-13-14 APPROVED

R:\Data\Utility\Utility Spec Drawings\wconn cdg.pd5.dwg VII-45

## CAST IRON METER BOX FOR 5/8" AND 1" METERS

NOTES:
1. MINIMUM WEIGHTS:
   A- 5/8" BOX w/COVER....103 LBS.
   B- 1" BOX w/COVER....120 LBS.
2. METER BOX WILL CONFORM TO ASTM A48, CLASS 30B.
3. 5/8" BOX DIMENSIONS ARE SHOWN
4. 1" METER BOX IS 6" LONGER THAN 5/8" BOX. ALL OTHER DIMENSIONS ARE SAME AS SHOWN.

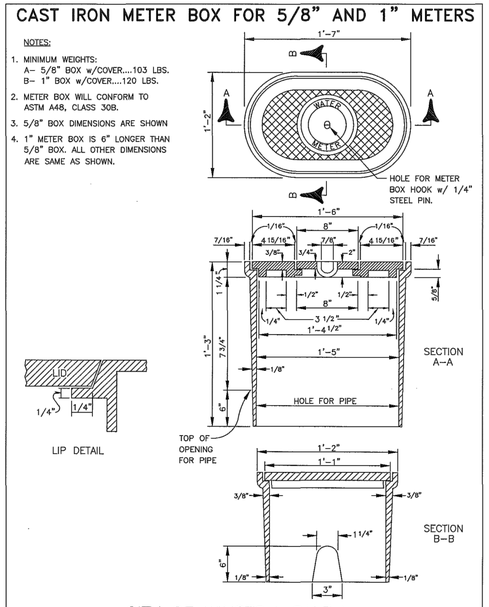


CITY OF WINSTON-SALEM
DEPARTMENT OF PUBLIC WORKS
ENGINEERING DIVISION

N.T.S. REVISED 9-1-08 APPROVED

R:\Data\Utility\Utility Spec Drawings/meter box.dwg VII-48

## POLYMER CONCRETE METER BOX FOR 1 1/2" AND 2" METERS

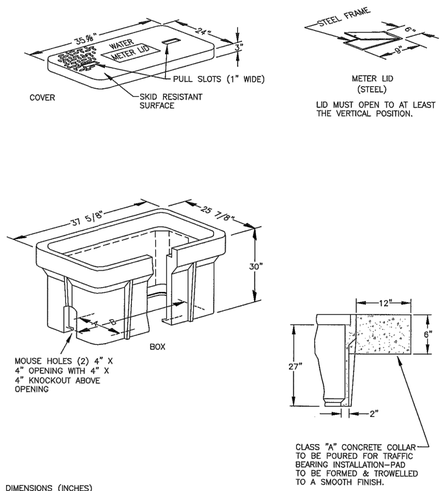


| DIMENSIONS (INCHES) | |
|---|---|
| A | B |
| 18 | 29 5/8 |

CITY OF WINSTON-SALEM
DEPARTMENT OF PUBLIC WORKS
ENGINEERING DIVISION

N.T.S. REVISED 9-1-08 APPROVED

R:\Data\Utility\Utility Spec Drawings/polymer concrete meter box.dwg VII-49

## 1 1/2" & 2" WATER CONNECTION

TEMPORARY CONSTRUCTION SPOOL SHALL BE INSTALLED BY THE CONTRACTOR. SPOOL TO BE INSTALLED WITH GASKETS AND BOLTS, AND TESTED TO THE INLET VALVE. CITY TO PROVIDE SPOOL, GASKETS AND BOLTS.

BY-PASS VALVE AND OUTLET VALVE SHALL BE PADLOCKED BY THE INSPECTOR. SPOOL AND PADLOCKS SHALL REMAIN INTACT UNTIL A PERMANENT METER IS INSTALLED. CITY TO PROVIDE PADLOCKS.

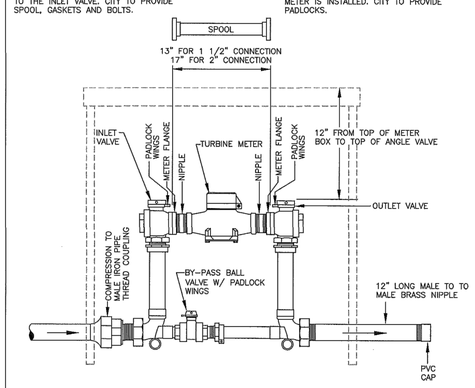


SETTER TO BE 1 1/2" OR 2" CUSTOM-SETTER WITH BY-PASS AND BALL VALVE ON INLET AND OUTLET MANUFACTURED BY THE FORD METER BOX CO.

NOTE: INLET AND OUTLET VALVES SHALL HAVE METER SUPPORT BRACKETS.

CITY OF WINSTON-SALEM
DEPARTMENT OF PUBLIC WORKS
ENGINEERING DIVISION

N.T.S. REVISED 9-1-08 APPROVED

R:\Data\Utility\Utility Spec Drawings/wconn.dwg VII-50

$$$$$$SYSTIME$$$$$$DGN$$$$$$