DocuSign Envelope ID: 34E2C66B-7797-4AB6-9BD3-31F0D6E698EB

F. A. PROJECT NO. : STP-55(20)

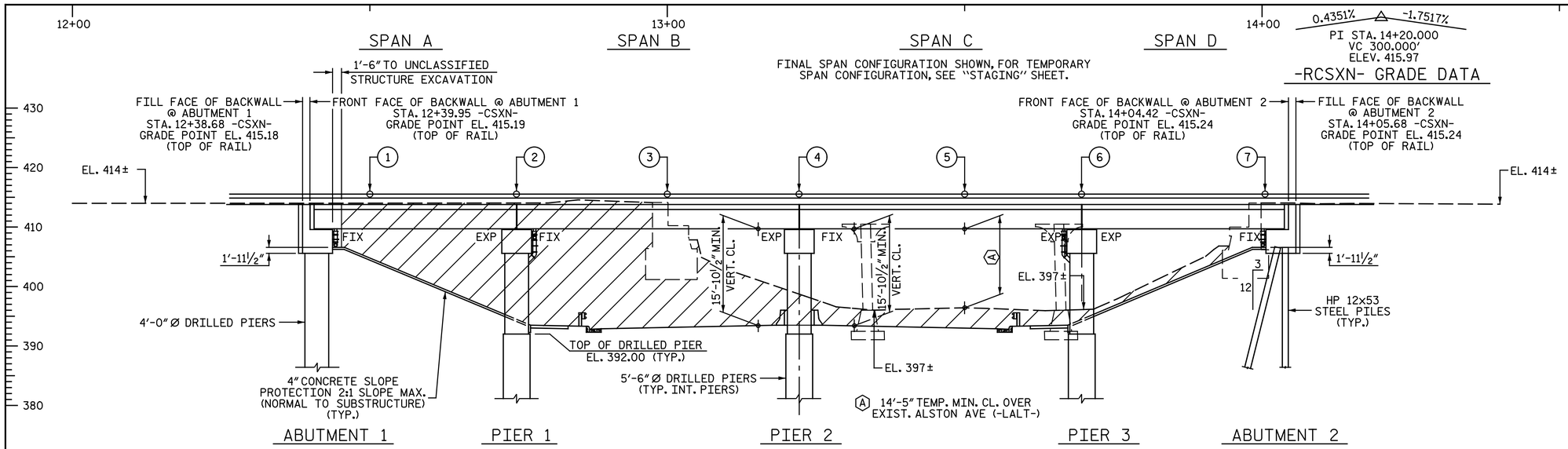

SECTION ALONG ℄ SURVEY -CSXN-

PIERS ON SECTION AT RIGHT ANGLES TO PIERS

UNCLASSIFIED STRUCTURE EXCAVATION

TOP OF RAIL ELEV.		
PT.	STA.	T/R ELEV.
1	12+50.00	415.23
2	12+74.68	415.34
3	13+00.00	415.42
4	13+22.18	415.45
5	13+50.00	415.43
6	13+69.68	415.39
7	14+00.00	415.27

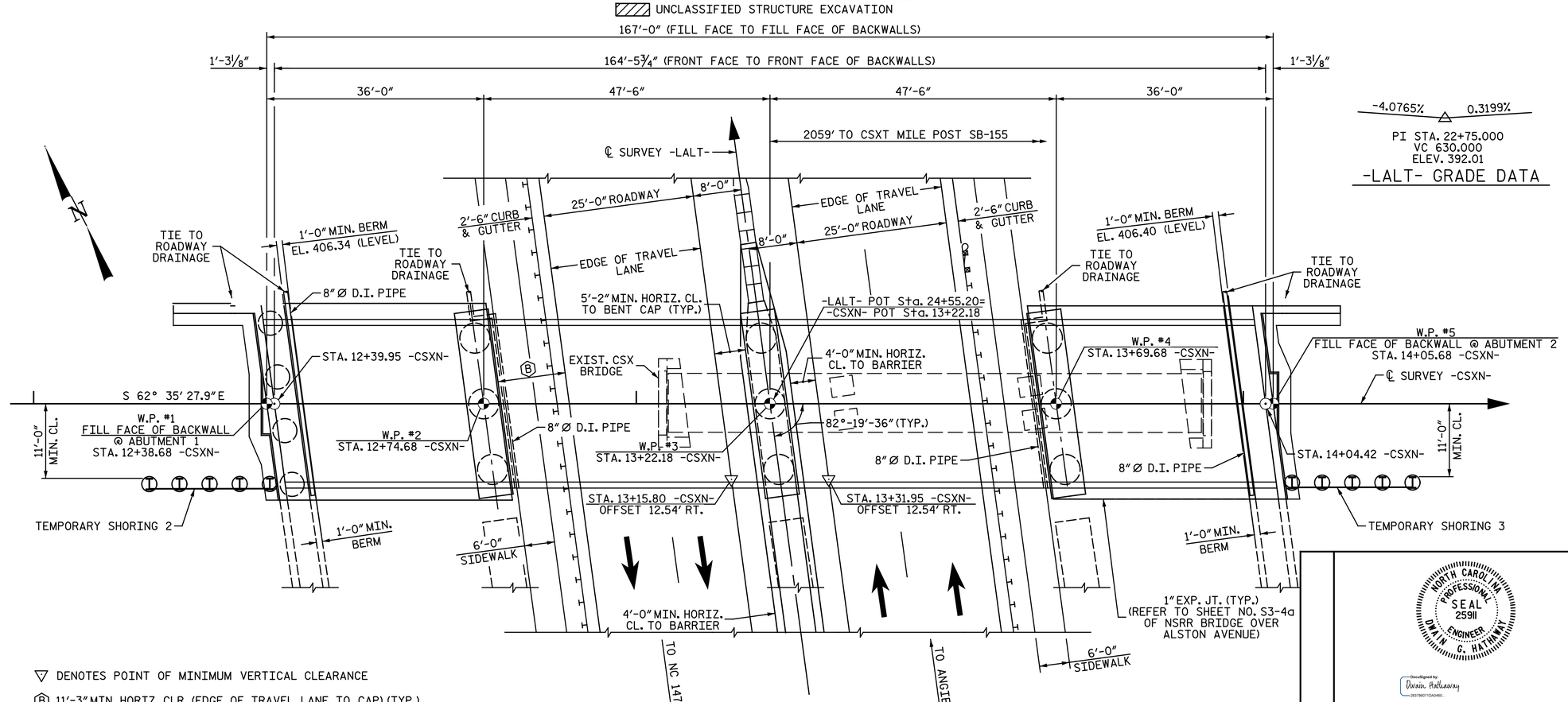

▽ DENOTES POINT OF MINIMUM VERTICAL CLEARANCE

Ⓑ 11'-3" MIN. HORIZ. CLR. (EDGE OF TRAVEL LANE TO CAP) (TYP.)

PLAN

PIERS AND ABUTMENTS ARE PARALLEL

PILES NOT SHOWN IN PLAN VIEW FOR CLARITY

PROJECT NO. U-3308

DURHAM COUNTY

STATION: 24+55.20 -LALT-

13+22.18 -CSXN-

SHEET 1 OF 5 BRIDGE #12 CSXT M.P. SB-154.61

STATE OF NORTH CAROLINA
DEPARTMENT OF TRANSPORTATION
RALEIGH

GENERAL DRAWING

FOR BRIDGE ON CSXT RAILWAY OVER ALSTON AVE. BETWEEN NC 147 AND ANGIER AVE.

NORTH CAROLINA PROFESSIONAL SEAL 25911 ENGINEER DWAIN C. HATHAWAY

DocuSigned by: Dwain Hathaway 283786071DA040...

5/3/2016

Michael Baker INTERNATIONAL

Michael Baker Engineering
8000 Regency Parkway, Suite 600
Cary, North Carolina 27518
NC License No. : F-1084

REVISIONS							SHEET NO.
NO.	BY:	DATE:	NO.	BY:	DATE:		S4-1
1			3				TOTAL SHEETS
2			4				68

DRAWN BY : JNA/MDM DATE : 1-7-14

CHECKED BY : S. A. DENNEY DATE : 2-24-14

SITE 4

amayhew 5/3/2016 9:36:56 AM
Filename: Y:\Projects\NCDOT\U-3308\Structures\Dwgs\Final\404_001_U3308_SMU_G001.dgn

DocuSign Envelope ID: 34E2C66B-7797-4AB6-9BD3-31F0D6E698EB

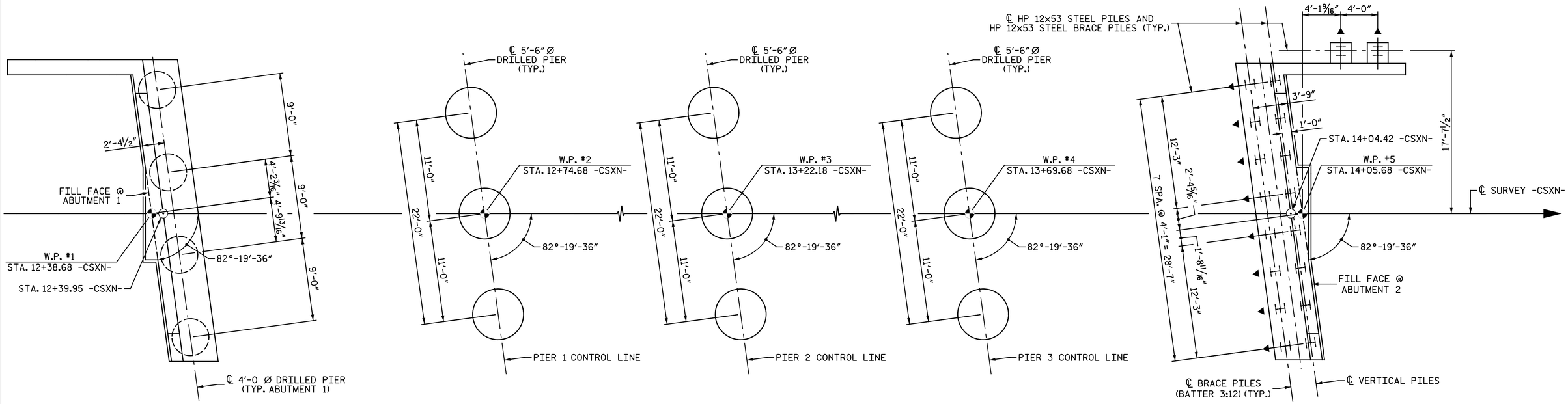

FOUNDATION LAYOUT

PIERS AND ABUTMENTS ARE PARALLEL

DIMENSIONS SHOWN ARE TO THE CENTERLINE PILE AT THE BOTTOM OF THE CAP

▲ DENOTES DIRECTION OF 3:12 BATTER

NOTES:

FOR PILES, SEE PILES (LFD-ASD) SPECIAL PROVISIONS.

DRIVE PILES AT ABUTMENT NO. 2 TO A REQUIRED BEARING CAPACITY OF 110 TONS PER PILE. THE REQUIRED BEARING CAPACITY IS EQUAL TO THE ALLOWABLE BEARING CAPACITY WITH A MINIMUM FACTOR OF SAFETY OF TWO.

THE ALLOWABLE BEARING CAPACITY FOR PILES AT ABUTMENT NO. 2 IS 55 TONS PER PILE.

FOR DRILLED PIERS, SEE LFD DRILLED PIERS SPECIAL PROVISIONS.

DRILLED PIERS AT ABUTMENT NO. 1 ARE DESIGNED FOR BOTH SKIN FRICTION AND END BEARING. CHECK FIELD CONDITIONS FOR THE REQUIRED END BEARING CAPACITY OF 20 TSF.

DRILLED PIERS AT PIER NO. 1, PIER NO. 2 AND PIER NO. 3 ARE DESIGNED FOR BOTH SKIN FRICTION AND END BEARING. CHECK FIELD CONDITIONS FOR THE REQUIRED END BEARING CAPACITY OF 20 TSF.

DRILLED PIERS AT ABUTMENT NO. 1 ARE DESIGNED FOR AN APPLIED LOAD OF 220 TONS EACH AT THE TOP OF THE COLUMN.

DRILLED PIERS AT PIER NO. 1, PIER NO. 2 AND PIER NO. 3 ARE DESIGNED FOR AN APPLIED LOAD OF 365 TONS EACH AT THE TOP OF THE COLUMN.

INSTALL DRILLED PIERS AT ABUTMENT NO. 1 THAT EXTEND TO AN ELEVATION NO HIGHER THAN 382 FT AND SATISFY THE REQUIRED END BEARING CAPACITY.

INSTALL DRILLED PIERS AT PIER NO. 1 THAT EXTEND TO AN ELEVATION NO HIGHER THAN 378 FT AND SATISFY THE REQUIRED END BEARING CAPACITY.

INSTALL DRILLED PIERS AT PIER NO. 2 THAT EXTEND TO AN ELEVATION NO HIGHER THAN 372 FT AND SATISFY THE REQUIRED END BEARING CAPACITY.

INSTALL DRILLED PIERS AT PIER NO. 3 THAT EXTEND TO AN ELEVATION NO HIGHER THAN 367 FT (LT, CT) AND 371 FT (RT) AND SATISFY THE REQUIRED END BEARING CAPACITY.

DRILLED PIER EXCAVATIONS AT ABUTMENT NO. 1 AND PIER NO. 1 THROUGH PIER NO. 3 WILL EXTEND INTO MATERIAL THAT DETERIORATES WHEN EXPOSED TO THE ELEMENTS. CHECK FIELD CONDITIONS FOR THE REQUIRED END BEARING CAPACITY AND PLACE CONCRETE IMMEDIATELY AFTER THE EXCAVATION IS COMPLETED.

SPT TESTING IS REQUIRED FOR DRILLED PIERS AT ABUTMENT NO. 1 AND PIER NO. 3.

SID INSPECTIONS MAY BE REQUIRED FOR DRILLED PIERS. THE ENGINEER WILL DETERMINE THE NEED FOR SID INSPECTIONS.

CSL TUBES AND TESTING ARE REQUIRED FOR DRILLED PIERS AT ABUTMENT NO. 1 AND PIER NO. 1 THROUGH PIER NO. 3.

PROJECT NO. U-3308
DURHAM COUNTY
STATION: 24+55.20 -LALT-
13+22.18 -CSXN-
SHEET 2 OF 5

NORTH CAROLINA PROFESSIONAL SEAL 25911 ENGINEER DWAIN C. HATHAWAY

Docusigned by: Dwain Hathaway 2837B6D71DAD460...
5/3/2016

Michael Baker INTERNATIONAL
Michael Baker Engineering
8000 Regency Parkway, Suite 600
Cary, North Carolina 27518
NC License No.: F-1084

STATE OF NORTH CAROLINA
DEPARTMENT OF TRANSPORTATION
RALEIGH

GENERAL DRAWING

FOR BRIDGE ON CSXT RAILWAY OVER ALSTON AVE. BETWEEN NC 147 AND ANGIER AVE.

REVISIONS							SHEET NO.
NO.	BY:	DATE:	NO.	BY:	DATE:		S4-2
1			3				TOTAL SHEETS
2			4				68

DRAWN BY : M. D. MAYHEW DATE : 12-31-13
CHECKED BY : S. A. DENNEY DATE : 2-24-14

SITE 4

mmayhew 5/3/2016 9:36:56 AM
Filename: Y:\Projects\NCDOT\U-3308\Structures\Dwgs\Final\404_002_U3308_SMU_G002.dgn

DocuSign Envelope ID: 34E2C66B-7797-4AB6-9BD3-31F0D6E698EB

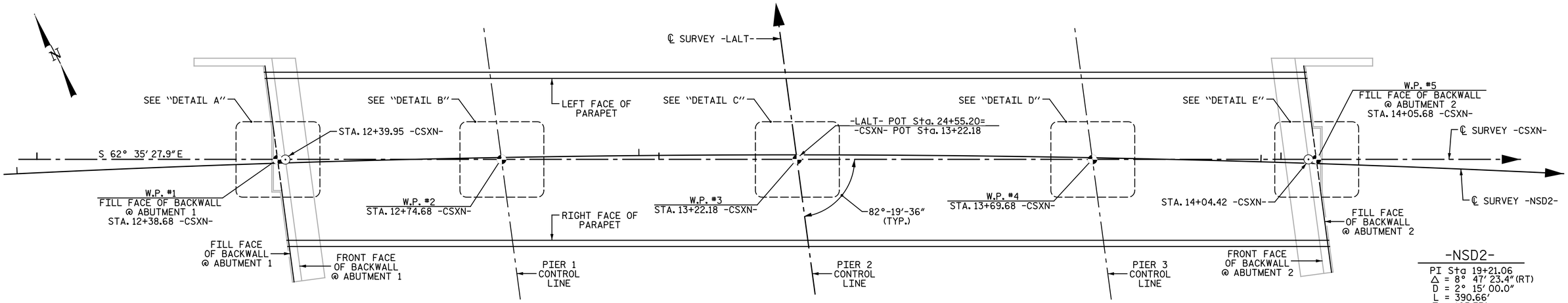

-NSD2-
PI Sta 19+21.06
Δ = 8° 47' 23.4" (RT)
D = 2° 15' 00.0"
L = 390.66'
T = 195.73'
R = 2,546.64'

PLAN

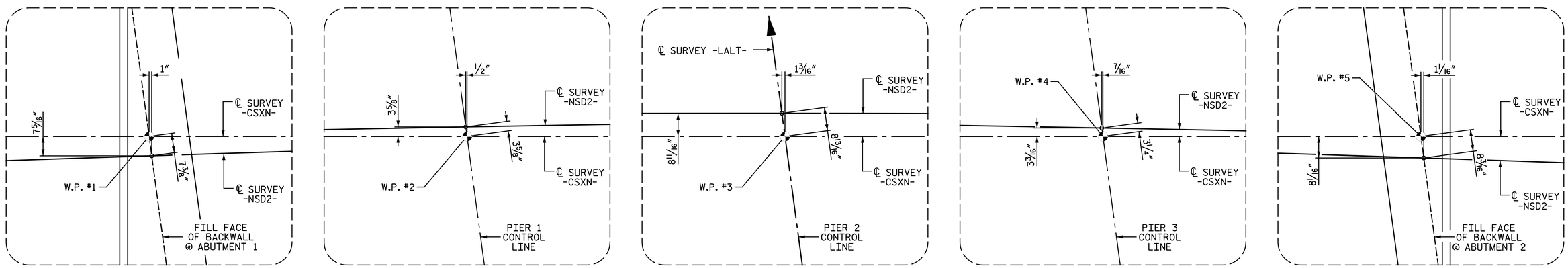

DETAIL A DETAIL B DETAIL C DETAIL D DETAIL E

TEMPORARY DETOUR -NSD2- CURVE OFFSETS

TEMPORARY DETOUR OFFSETS

TENTH POINTS	SPAN A -CSXN- STATION	SPAN A OFFSET ℄ -CSXN- TO -NSD2- *	SPAN A OFFSET FROM ℄ -NSD2- TO LEFT FACE OF PARAPET **	SPAN A OFFSET FROM ℄ -NSD2- TO RIGHT FACE OF PARAPET **	SPAN B -CSXN- STATION	SPAN B OFFSET ℄ -CSXN- TO -NSD2- *	SPAN B OFFSET FROM ℄ -NSD2- TO LEFT FACE OF PARAPET **	SPAN B OFFSET FROM ℄ -NSD2- TO RIGHT FACE OF PARAPET **	SPAN C -CSXN- STATION	SPAN C OFFSET ℄ -CSXN- TO -NSD2- *	SPAN C OFFSET FROM ℄ -NSD2- TO LEFT FACE OF PARAPET **	SPAN C OFFSET FROM ℄ -NSD2- TO RIGHT FACE OF PARAPET **	SPAN D -CSXN- STATION	SPAN D OFFSET ℄ -CSXN- TO -NSD2- *	SPAN D OFFSET FROM ℄ -NSD2- TO LEFT FACE OF PARAPET **	SPAN D OFFSET FROM ℄ -NSD2- TO RIGHT FACE OF PARAPET **	TENTH POINTS
0.0	12+38.68	0.612(RT)	13.612	12.388	12+74.68	0.301(LT)	12.699	13.301	13+22.18	0.726(LT)	12.274	13.726	13+69.68	0.265(LT)	12.735	13.265	0.0
0.1	12+42.28	0.498(RT)	13.498	12.502	12+79.43	0.383(LT)	12.617	13.383	13+26.93	0.720(LT)	12.280	13.720	13+73.28	0.194(LT)	12.806	13.194	0.1
0.2	12+45.88	0.389(RT)	13.389	12.611	12+84.18	0.457(LT)	12.543	13.457	13+31.68	0.705(LT)	12.295	13.705	13+76.88	0.118(LT)	12.882	13.118	0.2
0.3	12+49.48	0.285(RT)	13.285	12.715	12+88.93	0.521(LT)	12.479	13.521	13+36.43	0.681(LT)	12.319	13.681	13+80.48	0.037(LT)	12.963	13.037	0.3
0.4	12+53.08	0.186(RT)	13.186	12.814	12+93.68	0.577(LT)	12.423	13.577	13+41.18	0.648(LT)	12.352	13.648	13+84.08	0.049(RT)	13.049	12.951	0.4
0.5	12+56.68	0.092(RT)	13.092	12.908	12+98.43	0.624(LT)	12.376	13.624	13+45.93	0.607(LT)	12.394	13.607	13+87.68	0.141(RT)	13.141	12.859	0.5
0.6	12+60.28	0.003(RT)	13.003	12.997	13+03.18	0.662(LT)	12.338	13.662	13+50.68	0.556(LT)	12.444	13.556	13+91.28	0.237(RT)	13.237	12.763	0.6
0.7	12+63.88	0.080(LT)	12.920	13.080	13+07.93	0.692(LT)	12.309	13.692	13+55.43	0.497(LT)	12.503	13.497	13+94.88	0.339(RT)	13.339	12.661	0.7
0.8	12+67.48	0.159(LT)	12.841	13.159	13+12.68	0.712(LT)	12.288	13.712	13+60.18	0.428(LT)	12.572	13.428	13+98.48	0.446(RT)	13.446	12.554	0.8
0.9	12+71.08	0.232(LT)	12.768	13.232	13+17.43	0.723(LT)	12.277	13.723	13+64.93	0.351(LT)	12.649	13.351	14+02.08	0.557(RT)	13.557	12.443	0.9
1.0	12+74.68	0.301(LT)	12.699	13.301	13+22.18	0.726(LT)	12.274	13.726	13+69.68	0.265(LT)	12.735	13.265	14+05.68	0.674(RT)	13.674	12.326	1.0

* - NORMAL TO ℄ -CSXN-
** - NORMAL TO FACE OF PARAPET
(RT) - DENOTES RIGHT OF SURVEY -CSXN-
(LT) - DENOTES LEFT OF SURVEY -CSXN-

PROJECT NO. U-3308
DURHAM COUNTY
STATION: 24+55.20 -LALT-
13+22.18 -CSXN-
SHEET 3 OF 5

NORTH CAROLINA PROFESSIONAL SEAL 25911 ENGINEER DWAIN G. HATHAWAY

Docusigned by: Dwain Hathaway
2837B0071DA0460...
5/3/2016

STATE OF NORTH CAROLINA
DEPARTMENT OF TRANSPORTATION
RALEIGH

GENERAL DRAWING

FOR BRIDGE ON CSXT RAILWAY OVER ALSTON AVE. BETWEEN NC 147 AND ANGIER AVE.

Michael Baker INTERNATIONAL
Michael Baker Engineering
8000 Regency Parkway, Suite 600
Cary, North Carolina 276518
NC License No.: F-1084

REVISIONS							SHEET NO.
NO.	BY:	DATE:	NO.	BY:	DATE:		S4-3
1			3				TOTAL SHEETS
2			4				68

DRAWN BY : J. N. AUSTIN DATE : 4-24-13
CHECKED BY : D. G. HATHAWAY DATE : 4-25-13

cmayhew
5/3/2016 9:36:57 AM
Filename: Y:\Projects\NCDOT\U-3308\Structures\Dwgs\Final\404_003_U3308_SMU_GD03.dgn

SITE 4

DocuSign Envelope ID: FC4C4E2E-0FCE-477F-BA24-F9CB366CF3DA

GENERAL NOTES :

ASSUMED LIVE LOAD = COOPER E-80 W/ IMPACT OR ALTERNATE LIVE LOADING.

THIS BRIDGE HAS BEEN DESIGNED IN ACCORDANCE WITH THE REQUIREMENTS OF THE CURRENT A.R.E.M.A. MANUAL, NORFOLK SOUTHERN RAILWAY GUIDELINES FOR DESIGN OF GRADE SEPARATION STRUCTURES, AND CSXT CRITERIA FOR OPEN DECK RAILROAD BRIDGES. IN CASE OF DISCREPANCY THE MORE STRINGENT CITERIA WILL GOVERN.

ALL MATERIALS AND WORKMANSHIP SHALL BE IN ACCORDANCE WITH "STANDARD SPECIFICATIONS FOR ROADS AND STRUCTURES", JANUARY, 2012 NORTH CAROLINA DEPARTMENT OF TRANSPORTATION (HEREIN CALLED STANDARD SPECIFICATIONS), EXCEPT AS NOTED HEREIN, ELSEWHERE ON PLANS, OR IN THE SPECIAL PROVISIONS". (STRUCTURAL STEEL IN ACCORDANCE WITH CURRENT A.R.E.M.A. SPECIFICATIONS).

CONCRETE SHALL BE 4,500 PSI (SUBSTRUCTURE) OR 5,000 PSI (SUPERSTRUCTURE) CLASS AA CONCRETE WITH NO. 57 COARSE AGGREGATE AND SHALL BE AIR-ENTRAINED. MINIMUM CEMENT CONTENT PER CUBIC YARD OF CONCRETE SHALL BE 6.0 BAGS/CY. NO SUBSTITUTION OF FLY ASH, BLAST FURNACE SLAG OR OTHER MATERIAL WILL BE PERMITTED IN MEETING THIS MINIMUM CEMENT REQUIREMENT. NO RUBBED SURFACE FINISH IS REQUIRED. CHAMFER ALL EXPOSED EDGES AND CORNERS ¾" INCH EXCEPT AS NOTED. THE USE OF GROUND GRANULATED BLAST FURNACE SLAG IS NOT PERMITTED IN THE STRUCTURE. SEE SPECIAL PROVISIONS FOR CAST-IN-PLACE CONCRETE.

REINFORCING STEEL SHALL BE ASTM DESIGNATION A615, GRADE 60. ALL REINFORCING BARS IN THE CONCRETE DECK AND CURBS SHALL BE EPOXY-COATED IN CONFORMANCE WITH ASTM A775 "STANDARD SPECIFICATION FOR EPOXY-COATED REINFORCING BARS". COMPATIBLE EPOXY-COATED STEEL TIE WIRES SHALL BE USED WITH THE EPOXY-COATED BARS. FABRICATION TO BE IN ACCORDANCE WITH THE "MANUAL OF STANDARD PRACTICE" A.C.I. 315-80.

EXPANSION JOINT MATERIAL SHALL BE EITHER RUBBER OR CORK CONFORMING WITH AASHTO SPECIFICATIONS M-153-84 EXCEPT AS SHOWN ON THE PLANS OR IN THE SPECIAL PROVISIONS. CELLULAR AND BULB TYPE WATERSTOPS AND RUBBER JOINT COMPOUNDS SHALL BE AS SHOWN ON THE PLANS AND IN THE SPECIAL PROVISIONS.

STRUCTURE DRAINAGE SYSTEM: METAL DRAINS BEHIND ABUTMENTS AND DUCTILE IRON PIPE COLLECTOR SYSTEM, SHALL BE AS SHOWN ON THE PLANS AND OUTLINED IN THE SPECIAL PROVISIONS. DETAILS OF THE DRAINAGE SYSTEM SHALL BE SUBMITTED TO THE CHIEF ENGINEER-BRIDGES AND STRUCTURES, CSXT, JACKSONVILLE, FL. FOR APPROVAL.

CONTROL OF WORK: ALL WORK INVOLVED IN THE CONSTRUCTION OF THE RAILWAY STRUCTURE SHALL BE PERFORMED SATISFACTORY TO THE ENGINEER AND/OR CSXT. ALL METHODS OF HANDLING WORK AFFECTING THE SAFETY OF RAIL OPERATIONS MUST BE APPROVED BY THE RAILWAY ENGINEER BEFORE PROCEEDING WITH THAT PORTION OF THE WORK. RAIL TRAFFIC SHALL, AT ALL TIMES, BE MAINTAINED AND PROTECTED. THE CONTRACTOR SHALL NOT AT ANY TIME DELAY OR INTERFERE WITH RAIL OPERATIONS.

ALL CONSTRUCTION JOINTS SHOWN ON THESE PLANS SHALL BE REQUIRED UNLESS SHOWN OPTIONAL. CONSTRUCTION JOINTS SHALL NOT BE PERMITTED EXCEPT AS SHOWN ON THE PLANS, OR WHERE WRITTEN APPROVAL HAS BEEN OBTAINED.

DAMPPROOFING: PIER COLUMNS UP TO GROUND LINE, BACK OF BACKWALLS AND ABUTMENT SEATS, AND BACK OF WINGS SHALL BE DAMPPROOFED.

WATERPROOFING: ALL CONSTRUCTION JOINTS AND ANY SHRINKAGE CRACKS WHICH WILL BE COVERED BY FILL SHALL BE WATERPROOFED WITH A TWO PART WATERPROOFING SYSTEM CONSISTING OF A MEMBRANE LAYER AND A PROTECTION COURSE. STRIPS OF WATERPROOFING NO LESS THAN 2 FEET WIDE SHALL BE PLACED SYMMETRICALLY OVER JOINTS OR CRACKS. ADDITIONALLY, THE HORIZONAL SURFACES OF THE BALLAST TROUGH (EXCLUDING THE END DAM) SHALL BE WATERPROOFED WITH A TWO PART WATERPROOFING SYSTEM CONSISTING OF A MEMBRANE LAYER AND A 1 INCH THICK ASPHALT PLANKING OR OTHER RAILWAY APPROVED PROTECTION MATERIAL. ALL WATERPROOFING MATERIALS SHALL CONFORM TO THE RECOMMENDED PRACTICES IN THE A.R.E.M.A. MANUAL OF RAILWAY ENGINEERING CHAPTER 29.

BACKFILLING AROUND STRUCTURE: SEE SPECIAL PROVISIONS FOR BACKFILL BEHIND ABUTMENTS AND OTHER BACKFILL AROUND THE STRUCTURE.

FOR FOUNDATION RECOMMENDATION NOTES, SEE SHEET 2 OF 5.

FOR FALSEWORK AND FORMWORK, SEE SPECIAL PROVISIONS.

FOR SUBMITTAL OF WORKING DRAWINGS, SEE SPECIAL PROVISIONS.

FOR CRANE SAFETY, SEE SPECIAL PROVISIONS.

THE CONTRACTOR SHALL PROVIDE INDEPENDENT ASSURANCE SAMPLES OF REINFORCING STEEL AS FOLLOWS: FOR PROJECTS REQUIRING UP TO 400 TONS OF REINFORCING STEEL, ONE 30 INCH SAMPLE OF EACH SIZE BAR USED, AND FOR PROJECTS REQUIRING OVER 400 TONS OF REINFORCING STEEL, TWO 30 INCH SAMPLES OF EACH SIZE USED. THE BARS FROM THE SAMPLES ARE TAKEN MUST THEN BE SPLICED WITH REPLACEMENT BARS OF THE SIZE AND LENGTH OF THE SAMPLE PLUS A MINIMUM LAP SPLICE OF THIRTY BAR DIAMETERS. PAYMENT FOR THE SAMPLES OF REINFORCING STEEL SHALL BE CONSIDERED INCIDENTAL TO VARIOUS PAY ITEMS.

FOR MAINTENANCE AND PROTECTION OF TRAFFIC BENEATH PROPOSED STRUCTURE, SEE SPECIAL PROVISIONS.

NEEDLE BEAMS WILL NOT BE ALLOWED UNLESS OTHERWISE CALLED FOR ON THE PLANS OR APPROVED BY THE ENGINEER.

A 3/32" THICK BUTYL RUBBER MEMBRANE CONFORMING TO A.R.E.M.A. CHAPTER 8 SECTION 29.9.5 WILL BE INSTALLED ON THE BRIDGE DECK BALLAST RETAINERS. COST OF BUTYL RUBBER MEMBRANE MATERIAL AND INSTALLATION TO BE INCLUDED WITH THE COST OF "WATERPROOFING (RAILROAD STRUCTURES)", FOR "WATERPROOFING (RAILROAD STRUCTURES", SEE SPECIAL PROVISIONS.

FOR STRUCTURAL STEEL, SEE SPECIAL PROVISIONS.

FOR PAINTING STEEL STRUCTURES, SEE SPECIAL PROVISIONS.

FOR OTHER DESIGN DATA AND GENERAL NOTES, SEE SHEET SN.

FOR METAL HANDRAIL, SEE SPECIAL PROVISIONS.

FOR GROUT, SEE A.R.E.M.A. CHAPTER 8 ARTICLE 14.4.8 AND ARTICLE 14.5.5. AND SPECIAL PROVISIONS.

FOR SUPERSTRUCTURE CONCRETE, SUBSTRUCTURE CONCRETE, REINFORCING STEEL, EPOXY COATED REINFORCING STEEL, SPIRAL COLUMN REINFORCING STEEL, AND DAMPPROOFING (RAILROAD STRUCTURES), SEE SPECIAL PROVISIONS FOR CAST-IN-PLACE CONCRETE.

THE EXISTING STRUCTURE CONSISTING OF 3 SPAN STRUCTURAL STEEL GIRDERS WITH TIMBER FLOOR ON STEEL TRESTLE BENTS AND LOCATED AT PROPOSED STRUCTURE SITE SHALL BE REMOVED.

THE SUBSTRUCTURE OF THE EXISTING BRIDGE INDICATED ON THE PLANS IS FROM THE BEST INFORMATION AVAILABLE. SINCE THIS INFORMATION IS SHOWN FOR THE CONVENIENCE OF THE CONTRACTOR, THE CONTRACTOR SHALL HAVE NO CLAIM WHATSOEVER AGAINST THE DEPARTMENT OF TRANSPORTATION FOR ANY DELAYS OR ADDITIONAL COST INCURRED BASED ON DIFFERENCES BETWEEN THE EXISTING BRIDGE SUBSTRUCTURE SHOWN ON THE PLANS AND THE ACTUAL CONDITIONS AT THE PROJECT SITE.

INASMUCH AS THE PAINT SYSTEM ON THE EXISTING STRUCTURAL STEEL CONTAINS LEAD, THE CONTRACTOR'S ATTENTION IS DIRECTED TO ARTICLE 107-1 OF THE STANDARD SPECIFICATIONS. ANY COSTS RESULTING FROM COMPLIANCE WITH APPLICABLE STATE OR FEDERAL REGULATIONS PERTAINING TO HANDLING OF MATERIALS CONTAINING LEAD BASED PAINT SHALL BE INCLUDED IN THE BID PRICE FOR "REMOVAL OF EXISTING STRUCTURE AT STATION 13+22.18 -CSXN-."

THE MATERIAL SHOWN IN THE CROSS-HATCHED AREA SHALL BE EXCAVATED FOR A DISTANCE OF 14 FT (LEFT) AND 16 FT (RIGHT) OF CENTERLINE ROADWAY AS DIRECTED BY THE ENGINEER. THIS WORK WILL BE PAID FOR AT THE CONTRACT LUMP SUM PRICE FOR UNCLASSIFIED STRUCTURE EXCAVATION. SEE SECTION 412 OF THE STANDARD SPECIFICATIONS.

THE CONTRACTOR WILL BE REQUIRED TO CONSTRUCT, MAINTAIN AND AFTERWARDS REMOVE A TEMPORARY SPAN FOR USE DURING CONSTRUCTION OF THE PROPOSED STRUCTURE. FOR CONSTRUCTION, MAINTENANCE AND REMOVAL OF TEMPORARY SPAN, SEE TEMPORARY SPAN SPECIAL PROVISIONS.

FOR TEMPORARY RAILROAD SHORING SPECIAL PROVISION AND PAY ITEM, SEE STR. #3.

FOR ELASTOMERIC FLASHING, SEE SPECIAL PROVISIONS.

FOR SELF-LUBRICATING EXPANSION BEARING ASSEMBLIES, SEE SPECIAL PROVISIONS.

FOR ASBESTOS ASSESSMENT FOR BRIDGE DEMOLITION AND RENOVATION ACTIVITIES, SEE SPECIAL PROVISIONS.

THE CONTRACTOR'S ATTENTION IS DIRECTED TO THE EXISTING ABANDONED BRIDGE SOUTH OF THE PROPOSED -CSXN- BRIDGE. ANY REQUIREMENTS PERTAINING TO THE EXISTING STRUCTURE REMOVAL ARE ALSO APPLICABLE TO THE EXISTING ABANDONED BRIDGE.

FOR TURN-OF-NUT TIGHTENING, SEE SPECIAL PROVISIONS.

DESIGN DATA:

SPECIFICATIONS:	CURRENT A.R.E.M.A., CSX TRANSPORTATION, AND NORFOLK SOUTHERN DESIGN CRITERIA FOR GRADE SEPARATION PROJECTS.
LIVE LOAD:	COOPERS E-80 + ALTERNATE WITH IMPACT AS PER A.R.E.M.A. SPECIFICATIONS.
STRUCTURAL STEEL:	ASTM A709 GRADE 50 (Fy = 50 KSI)
REINFORCED CONCRETE:	SUPERSTRUCTURE: f'c = 5000 PSI SUBSTRUCTURE: f'c = 4500 PSI
REINFORCING STEEL:	ASTM A615 GRADE 60

PROJECT NO. U-3308

DURHAM COUNTY

STATION: 24+55.20 -LALT-
13+22.18 -CSXN-

SHEET 4 OF 5

DOCUMENT NOT CONSIDERED FINAL UNLESS ALL SIGNATURES COMPLETED

NORTH CAROLINA PROFESSIONAL SEAL 25911 ENGINEER DWAIN C. HATHAWAY

DocuSigned by: Dwain Hathaway
2837B0071DA0460...
7/6/2016

Baker

Michael Baker Engineering
8000 Regency Parkway, Suite 600
Cary, North Carolina 27518
NC License No.: F-1084

STATE OF NORTH CAROLINA
DEPARTMENT OF TRANSPORTATION
RALEIGH

GENERAL DRAWING

FOR BRIDGE ON CSXT RAILWAY OVER ALSTON AVE. BETWEEN NC 147 AND ANGIER AVE.

REVISIONS							SHEET NO.
NO.	BY:	DATE:	NO.	BY:	DATE:		S4-4
1			3				TOTAL SHEETS
2			4				68

SITE 4

DRAWN BY : J. N. AUSTIN DATE : 1-7-14
CHECKED BY : S. A. DENNEY DATE : 2-24-14

$USER$ $TIME$
$DATE$
Filename: $FILE$

DocuSign Envelope ID: 34E2C66B-7797-4AB6-9BD3-31F0D6E698EB

GENERAL NOTES :

ASSUMED LIVE LOAD = COOPER E-80 W/ IMPACT OR ALTERNATE LIVE LOADING.

THIS BRIDGE HAS BEEN DESIGNED IN ACCORDANCE WITH THE REQUIREMENTS OF THE CURRENT A.R.E.M.A. MANUAL, NORFOLK SOUTHERN RAILWAY GUIDELINES FOR DESIGN OF GRADE SEPARATION STRUCTURES, AND CSXT CRITERIA FOR OPEN DECK RAILROAD BRIDGES. IN CASE OF DISCREPANCY THE MORE STRINGENT CITERIA WILL GOVERN.

ALL MATERIALS AND WORKMANSHIP SHALL BE IN ACCORDANCE WITH "STANDARD SPECIFICATIONS FOR ROADS AND STRUCTURES", JANUARY, 2012 NORTH CAROLINA DEPARTMENT OF TRANSPORTATION (HEREIN CALLED STANDARD SPECIFICATIONS), EXCEPT AS NOTED HEREIN, ELSEWHERE ON PLANS, OR IN THE SPECIAL PROVISIONS". (STRUCTURAL STEEL IN ACCORDANCE WITH CURRENT A.R.E.M.A. SPECIFICATIONS).

CONCRETE SHALL BE 4,500 PSI (SUBSTRUCTURE) OR 5,000 PSI (SUPERSTRUCTURE) CLASS AA CONCRETE WITH NO. 57 COARSE AGGREGATE AND SHALL BE AIR-ENTRAINED. MINIMUM CEMENT CONTENT PER CUBIC YARD OF CONCRETE SHALL BE 6.0 BAGS/CY. NO SUBSTITUTION OF FLY ASH, BLAST FURNACE SLAG OR OTHER MATERIAL WILL BE PERMITTED IN MEETING THIS MINIMUM CEMENT REQUIREMENT. NO RUBBED SURFACE FINISH IS REQUIRED. CHAMFER ALL EXPOSED EDGES AND CORNERS ¾" INCH EXCEPT AS NOTED. THE USE OF GROUND GRANULATED BLAST FURNACE SLAG IS NOT PERMITTED IN THE STRUCTURE. SEE SPECIAL PROVISIONS FOR CAST-IN-PLACE CONCRETE.

REINFORCING STEEL SHALL BE ASTM DESIGNATION A615, GRADE 60. ALL REINFORCING BARS IN THE CONCRETE DECK AND CURBS SHALL BE EPOXY-COATED IN CONFORMANCE WITH ASTM A775 "STANDARD SPECIFICATION FOR EPOXY-COATED REINFORCING BARS". COMPATIBLE EPOXY-COATED STEEL TIE WIRES SHALL BE USED WITH THE EPOXY-COATED BARS. FABRICATION TO BE IN ACCORDANCE WITH THE "MANUAL OF STANDARD PRACTICE" A.C.I. 315-80.

EXPANSION JOINT MATERIAL SHALL BE EITHER RUBBER OR CORK CONFORMING WITH AASHTO SPECIFICATIONS M-153-84 EXCEPT AS SHOWN ON THE PLANS OR IN THE SPECIAL PROVISIONS. CELLULAR AND BULB TYPE WATERSTOPS AND RUBBER JOINT COMPOUNDS SHALL BE AS SHOWN ON THE PLANS AND IN THE SPECIAL PROVISIONS.

STRUCTURE DRAINAGE SYSTEM: METAL DRAINS BEHIND ABUTMENTS AND DUCTILE IRON PIPE COLLECTOR SYSTEM, SHALL BE AS SHOWN ON THE PLANS AND OUTLINED IN THE SPECIAL PROVISIONS. DETAILS OF THE DRAINAGE SYSTEM SHALL BE SUBMITTED TO THE CHIEF ENGINEER-BRIDGES AND STRUCTURES, CSXT, JACKSONVILLE, FL. FOR APPROVAL.

CONTROL OF WORK: ALL WORK INVOLVED IN THE CONSTRUCTION OF THE RAILWAY STRUCTURE SHALL BE PERFORMED SATISFACTORY TO THE ENGINEER AND/OR CSXT. ALL METHODS OF HANDLING WORK AFFECTING THE SAFETY OF RAIL OPERATIONS MUST BE APPROVED BY THE RAILWAY ENGINEER BEFORE PROCEEDING WITH THAT PORTION OF THE WORK. RAIL TRAFFIC SHALL, AT ALL TIMES, BE MAINTAINED AND PROTECTED. THE CONTRACTOR SHALL NOT AT ANY TIME DELAY OR INTERFERE WITH RAIL OPERATIONS.

ALL CONSTRUCTION JOINTS SHOWN ON THESE PLANS SHALL BE REQUIRED UNLESS SHOWN OPTIONAL. CONSTRUCTION JOINTS SHALL NOT BE PERMITTED EXCEPT AS SHOWN ON THE PLANS, OR WHERE WRITTEN APPROVAL HAS BEEN OBTAINED.

DAMPPROOFING: PIER COLUMNS UP TO GROUND LINE, BACK OF BACKWALLS AND ABUTMENT SEATS, AND BACK OF WINGS SHALL BE DAMPPROOFED.

WATERPROOFING: ALL CONSTRUCTION JOINTS AND ANY SHRINKAGE CRACKS WHICH WILL BE COVERED BY FILL SHALL BE WATERPROOFED WITH A TWO PART WATERPROOFING SYSTEM CONSISTING OF A MEMBRANE LAYER AND A PROTECTION COURSE. STRIPS OF WATERPROOFING NO LESS THAN 2 FEET WIDE SHALL BE PLACED SYMMETRICALLY OVER JOINTS OR CRACKS. ADDITIONALLY, THE HORIZONAL SURFACES OF THE BALLAST TROUGH (EXCLUDING THE END DAM) SHALL BE WATERPROOFED WITH A TWO PART WATERPROOFING SYSTEM CONSISTING OF A MEMBRANE LAYER AND A 1 INCH THICK ASPHALT PLANKING OR OTHER RAILWAY APPROVED PROTECTION MATERIAL. ALL WATERPROOFING MATERIALS SHALL CONFORM TO THE RECOMMENDED PRACTICES IN THE A.R.E.M.A. MANUAL OF RAILWAY ENGINEERING CHAPTER 29.

BACKFILLING AROUND STRUCTURE: SEE SPECIAL PROVISIONS FOR BACKFILL BEHIND ABUTMENTS AND OTHER BACKFILL AROUND THE STRUCTURE.

FOR FOUNDATION RECOMMENDATION NOTES, SEE SHEET 2 OF 5.

FOR FALSEWORK AND FORMWORK, SEE SPECIAL PROVISIONS.

FOR SUBMITTAL OF WORKING DRAWINGS, SEE SPECIAL PROVISIONS.

FOR CRANE SAFETY, SEE SPECIAL PROVISIONS.

THE CONTRACTOR SHALL PROVIDE INDEPENDENT ASSURANCE SAMPLES OF REINFORCING STEEL AS FOLLOWS: FOR PROJECTS REQUIRING UP TO 400 TONS OF REINFORCING STEEL, ONE 30 INCH SAMPLE OF EACH SIZE BAR USED, AND FOR PROJECTS REQUIRING OVER 400 TONS OF REINFORCING STEEL, TWO 30 INCH SAMPLES OF EACH SIZE USED. THE BARS FROM THE SAMPLES ARE TAKEN MUST THEN BE SPLICED WITH REPLACEMENT BARS OF THE SIZE AND LENGTH OF THE SAMPLE PLUS A MINIMUM LAP SPLICE OF THIRTY BAR DIAMETERS. PAYMENT FOR THE SAMPLES OF REINFORCING STEEL SHALL BE CONSIDERED INCIDENTAL TO VARIOUS PAY ITEMS.

FOR MAINTENANCE AND PROTECTION OF TRAFFIC BENEATH PROPOSED STRUCTURE, SEE SPECIAL PROVISIONS.

NEEDLE BEAMS WILL NOT BE ALLOWED UNLESS OTHERWISE CALLED FOR ON THE PLANS OR APPROVED BY THE ENGINEER.

A 3/32" THICK BUTYL RUBBER MEMBRANE CONFORMING TO A.R.E.M.A. CHAPTER 8 SECTION 29.9.5 WILL BE INSTALLED ON THE BRIDGE DECK BALLAST RETAINERS. COST OF BUTYL RUBBER MEMBRANE MATERIAL AND INSTALLATION TO BE INCLUDED WITH THE COST OF "WATERPROOFING (RAILROAD STRUCTURES)", FOR "WATERPROOFING (RAILROAD STRUCTURES", SEE SPECIAL PROVISIONS.

FOR STRUCTURAL STEEL, SEE SPECIAL PROVISIONS.

FOR PAINTING STEEL STRUCTURES, SEE SPECIAL PROVISIONS.

FOR OTHER DESIGN DATA AND GENERAL NOTES, SEE SHEET SN.

FOR METAL HANDRAIL, SEE SPECIAL PROVISIONS.

FOR GROUT, SEE A.R.E.M.A. CHAPTER 8 ARTICLE 14.4.8 AND ARTICLE 14.5.5. AND SPECIAL PROVISIONS.

FOR SUPERSTRUCTURE CONCRETE, SUBSTRUCTURE CONCRETE, REINFORCING STEEL, EPOXY COATED REINFORCING STEEL, SPIRAL COLUMN REINFORCING STEEL, AND DAMPPROOFING (RAILROAD STRUCTURES), SEE SPECIAL PROVISIONS FOR CAST-IN-PLACE CONCRETE.

THE EXISTING STRUCTURE CONSISTING OF 3 SPAN STRUCTURAL STEEL GIRDERS WITH TIMBER FLOOR ON STEEL TRESTLE BENTS AND LOCATED AT PROPOSED STRUCTURE SITE SHALL BE REMOVED.

THE SUBSTRUCTURE OF THE EXISTING BRIDGE INDICATED ON THE PLANS IS FROM THE BEST INFORMATION AVAILABLE. SINCE THIS INFORMATION IS SHOWN FOR THE CONVENIENCE OF THE CONTRACTOR, THE CONTRACTOR SHALL HAVE NO CLAIM WHATSOEVER AGAINST THE DEPARTMENT OF TRANSPORTATION FOR ANY DELAYS OR ADDITIONAL COST INCURRED BASED ON DIFFERENCES BETWEEN THE EXISTING BRIDGE SUBSTRUCTURE SHOWN ON THE PLANS AND THE ACTUAL CONDITIONS AT THE PROJECT SITE.

INASMUCH AS THE PAINT SYSTEM ON THE EXISTING STRUCTURAL STEEL CONTAINS LEAD, THE CONTRACTOR'S ATTENTION IS DIRECTED TO ARTICLE 107-1 OF THE STANDARD SPECIFICATIONS. ANY COSTS RESULTING FROM COMPLIANCE WITH APPLICABLE STATE OR FEDERAL REGULATIONS PERTAINING TO HANDLING OF MATERIALS CONTAINING LEAD BASED PAINT SHALL BE INCLUDED IN THE BID PRICE FOR "REMOVAL OF EXISTING STRUCTURE AT STATION 13+22.18 -CSXN-."

THE MATERIAL SHOWN IN THE CROSS-HATCHED AREA SHALL BE EXCAVATED FOR A DISTANCE OF 14 FT (LEFT) AND 16 FT (RIGHT) OF CENTERLINE ROADWAY AS DIRECTED BY THE ENGINEER. THIS WORK WILL BE PAID FOR AT THE CONTRACT LUMP SUM PRICE FOR UNCLASSIFIED STRUCTURE EXCAVATION. SEE SECTION 412 OF THE STANDARD SPECIFICATIONS.

THE CONTRACTOR WILL BE REQUIRED TO CONSTRUCT, MAINTAIN AND AFTERWARDS REMOVE A TEMPORARY SPAN FOR USE DURING CONSTRUCTION OF THE PROPOSED STRUCTURE. FOR CONSTRUCTION, MAINTENANCE AND REMOVAL OF TEMPORARY SPAN, SEE TEMPORARY SPAN SPECIAL PROVISIONS.

FOR TEMPORARY RAILROAD SHORING SPECIAL PROVISION AND PAY ITEM, SEE STR. #3.

FOR ELASTOMERIC FLASHING, SEE SPECIAL PROVISIONS.

FOR SELF-LUBRICATING EXPANSION BEARING ASSEMBLIES, SEE SPECIAL PROVISIONS.

FOR ASBESTOS ASSESSMENT FOR BRIDGE DEMOLITION AND RENOVATION ACTIVITIES, SEE SPECIAL PROVISIONS.

THE CONTRACTOR'S ATTENTION IS DIRECTED TO THE EXISTING ABANDONED BRIDGE SOUTH OF THE PROPOSED -CSXN- BRIDGE. ANY REQUIREMENTS PERTAINING TO THE EXISTING STRUCTURE REMOVAL ARE ALSO APPLICABLE TO THE EXISTING ABANDONED BRIDGE.

DESIGN DATA:

SPECIFICATIONS:	CURRENT A.R.E.M.A., CSX TRANSPORTATION, AND NORFOLK SOUTHERN DESIGN CRITERIA FOR GRADE SEPARATION PROJECTS.
LIVE LOAD:	COOPERS E-80 + ALTERNATE WITH IMPACT AS PER A.R.E.M.A. SPECIFICATIONS.
STRUCTURAL STEEL:	ASTM A709 GRADE 50 (Fy = 50 KSI)
REINFORCED CONCRETE:	SUPERSTRUCTURE: f'c = 5000 PSI SUBSTRUCTURE: f'c = 4500 PSI
REINFORCING STEEL:	ASTM A615 GRADE 60

PROJECT NO. U-3308

DURHAM COUNTY

STATION: 24+55.20 -LALT-
13+22.18 -CSXN-

SHEET 4 OF 5

NORTH CAROLINA PROFESSIONAL SEAL 25911 ENGINEER DWAIN G. HATHAWAY

DocuSigned by: Dwain Hathaway 2B37B6D7D0A04B0...

5/3/2016

STATE OF NORTH CAROLINA
DEPARTMENT OF TRANSPORTATION
RALEIGH

GENERAL DRAWING

FOR BRIDGE ON CSXT RAILWAY OVER ALSTON AVE. BETWEEN NC 147 AND ANGIER AVE.

Michael Baker INTERNATIONAL

Michael Baker Engineering
8000 Regency Parkway, Suite 600
Cary, North Carolina 276518
NC License No.: F-1084

REVISIONS							SHEET NO.
NO.	BY:	DATE:	NO.	BY:	DATE:		S4-4
1			3				TOTAL SHEETS
2			4				68

SITE 4

DRAWN BY : J. N. AUSTIN DATE : 1-7-14
CHECKED BY : S. A. DENNEY DATE : 2-24-14

cmoyhew 9:36:57 AM
5/3/2016
Filename: Y:\Projects\NCDOT\U-3308\Structures\Dwgs\Final\404_004_U3308_SMU_GD04.dgn

DocuSign Envelope ID: 34E2C66B-7797-4AB6-9BD3-31F0D6E698EB

B.M. 503 : R.R SPIKE IN 15"PIN OAK STA. 18+79.99 -NSN- OFFSET 45.9 FT. RIGHT EL. 414.78

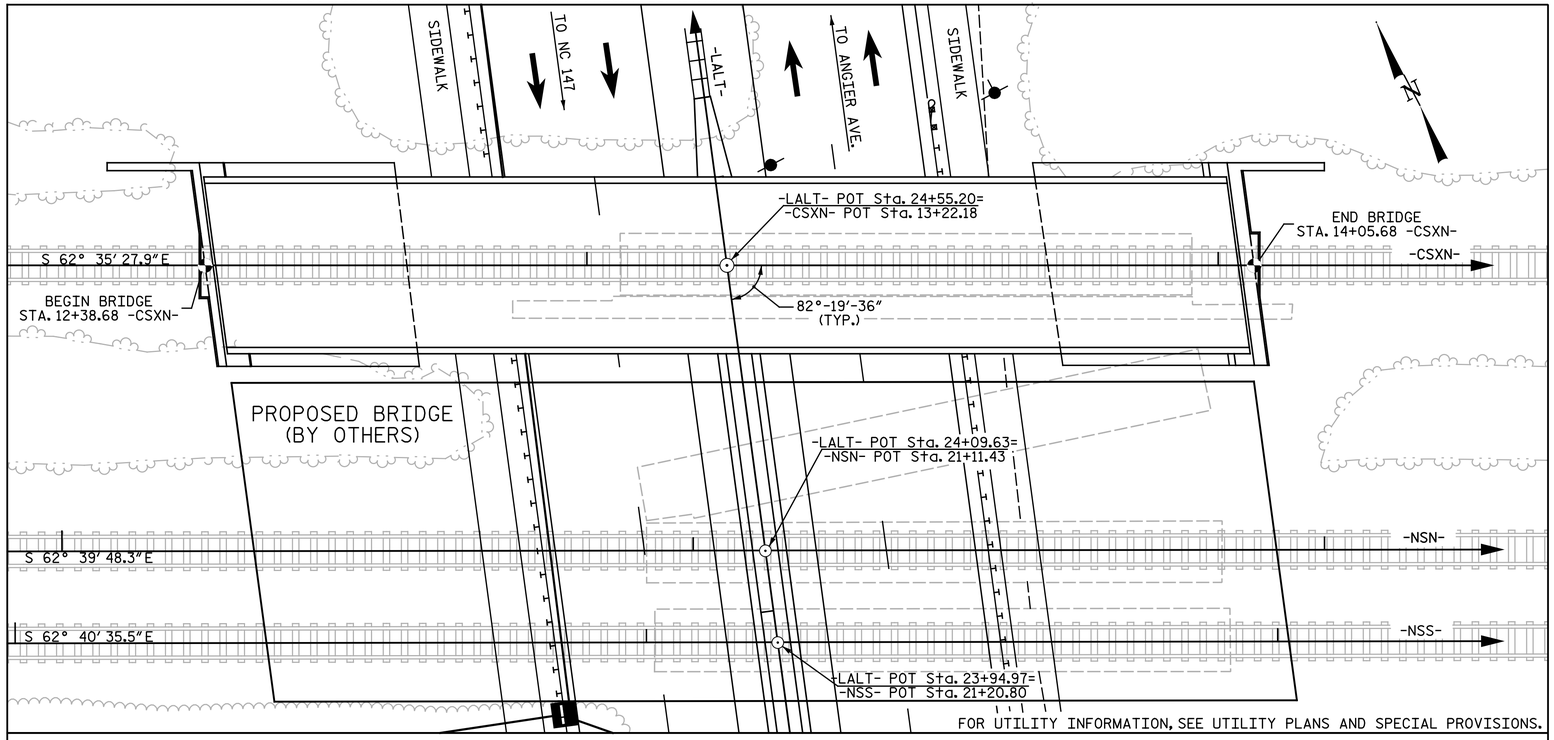

LOCATION SKETCH

TOTAL BILL OF MATERIAL

	REMOVAL OF EXISTING STRUCTURE AT STA. 13+22.18 -CSXN-	4'-0" DIA. DRILLED PIERS IN SOIL (LFD)	4'-0" DIA. DRILLED PIERS NOT IN SOIL (LFD)	5'-6" DIA. DRILLED PIERS IN SOIL (LFD)	5'-6" DIA. DRILLED PIERS NOT IN SOIL (LFD)	SID INSPECTIONS (LFD)	SPT TESTING (LFD)	CSL TESTING (LFD)	UNCLASSIFIED STRUCTURE EXCAVATION AT STA. 13+22.18 -CSXN-	REINFORCED CONCRETE DECK SLAB	CLASS AA CONCRETE AS MODIFIED BY RAILROAD	REINFORCING STEEL	EPOXY COATED REINFORCING STEEL	SPIRAL COLUMN REINFORCING STEEL	EPOXY COATED SPIRAL COLUMN REINFORCING STEEL	APPROX. 564,994 LBS. STRUCTURAL STEEL
	LUMP SUM	LIN. FT.	LIN. FT.	LIN. FT.	LIN. FT.	EA.	EA.	EA.	LUMP SUM	SQ. FT.	CU. YDS.	LBS.	LBS.	LBS.	LBS.	LUMP SUM
SUPERSTRUCTURE										4,601						
ABUTMENT 1		59.5	30.0				4	4			45.7	30,400		4,032		
PIER 1				7	35			3			57.1	5,088	16,449		3,909	
PIER 2				24	36			3			57.4	5,088	18,776		5,010	
PIER 3				45	26		3	3			57.2	5,088	20,147		5,665	
ABUTMENT 2											48.7	9,924				
TOTAL	LUMP SUM	59.5	30.0	76	97	13	7	13	LUMP SUM	4,601	266.1	55,588	55,372	4,032	14,584	LUMP SUM

TOTAL BILL OF MATERIAL

	PAINTING FOR STRUCTURAL STEEL	WATER-PROOFING (RAILROAD STRUCTURES)	DAMP-PROOFING (RAILROAD STRUCTURES)	HP 12x53 STEEL PILES (LFD)		METHOD A WATERPROOFING	METAL HANDRAIL	1'-0" CONCRETE PARAPET	4" SLOPE PROTECTION	SELF-LUBRICATING EXPANSION BEARING ASSEMBLIES	STRUCTURE DRAINAGE SYSTEM AT STA. 13+22.18 -CSXN-	CONSTRUCTION, MAINTENANCE AND REMOVAL OF TEMPORARY SPAN	ASBESTOS ASSESSMENT
	LUMP SUM	SQ. YDS.	SQ. YDS.	NO.	LIN. FT.	SQ. YDS.	LIN. FT.	LIN. FT.	SQ.YDS.	LUMP SUM	LUMP SUM	LUMP SUM	LUMP SUM
SUPERSTRUCTURE		478					330.0	328.3					
ABUTMENT 1			52.7			10.3	20.1		145				
PIER 1			5.2			11.0							
PIER 2			5.2			11.0							
PIER 3			5.2			11.0							
ABUTMENT 2			52.1	18	540	10.0	19.7		143				
TOTAL	LUMP SUM	478	120.4	18	540	53.3	369.8	328.3	288	LUMP SUM	LUMP SUM	LUMP SUM	LUMP SUM

PROJECT NO. U-3308
DURHAM COUNTY
STATION: 24+55.20 -LALT-
13+22.18 -CSXN-
SHEET 5 OF 5

NORTH CAROLINA PROFESSIONAL SEAL 25911 ENGINEER DWAIN G. HATHAWAY

DocuSigned by: Dwain Hathaway 2557B07D1DA040...
5/3/2016

STATE OF NORTH CAROLINA
DEPARTMENT OF TRANSPORTATION
RALEIGH

GENERAL DRAWING

FOR BRIDGE ON CSXT RAILWAY OVER ALSTON AVE. BETWEEN NC 147 AND ANGIER AVE.

Michael Baker INTERNATIONAL
Michael Baker Engineering
8000 Regency Parkway, Suite 600
Cary, North Carolina 27518
NC License No. : F-1084

REVISIONS						SHEET NO.
NO.	BY:	DATE:	NO.	BY:	DATE:	S4-5
1			3			TOTAL SHEETS
2			4			68

SITE 4

DRAWN BY : J. N. A. / M. D. M. DATE : 12-31-13
CHECKED BY : S. A. DENNEY DATE : 2-24-14

cmayhew 9:36:58 AM
5/3/2016
Filename: Y:\Projects\NCDOT\U-3308\Structures\Dwgs\Final\404_005_U3308_SMU_GD05.dgn

DocuSign Envelope ID: 34E2C66B-7797-4AB6-9BD3-31F0D6E698EB

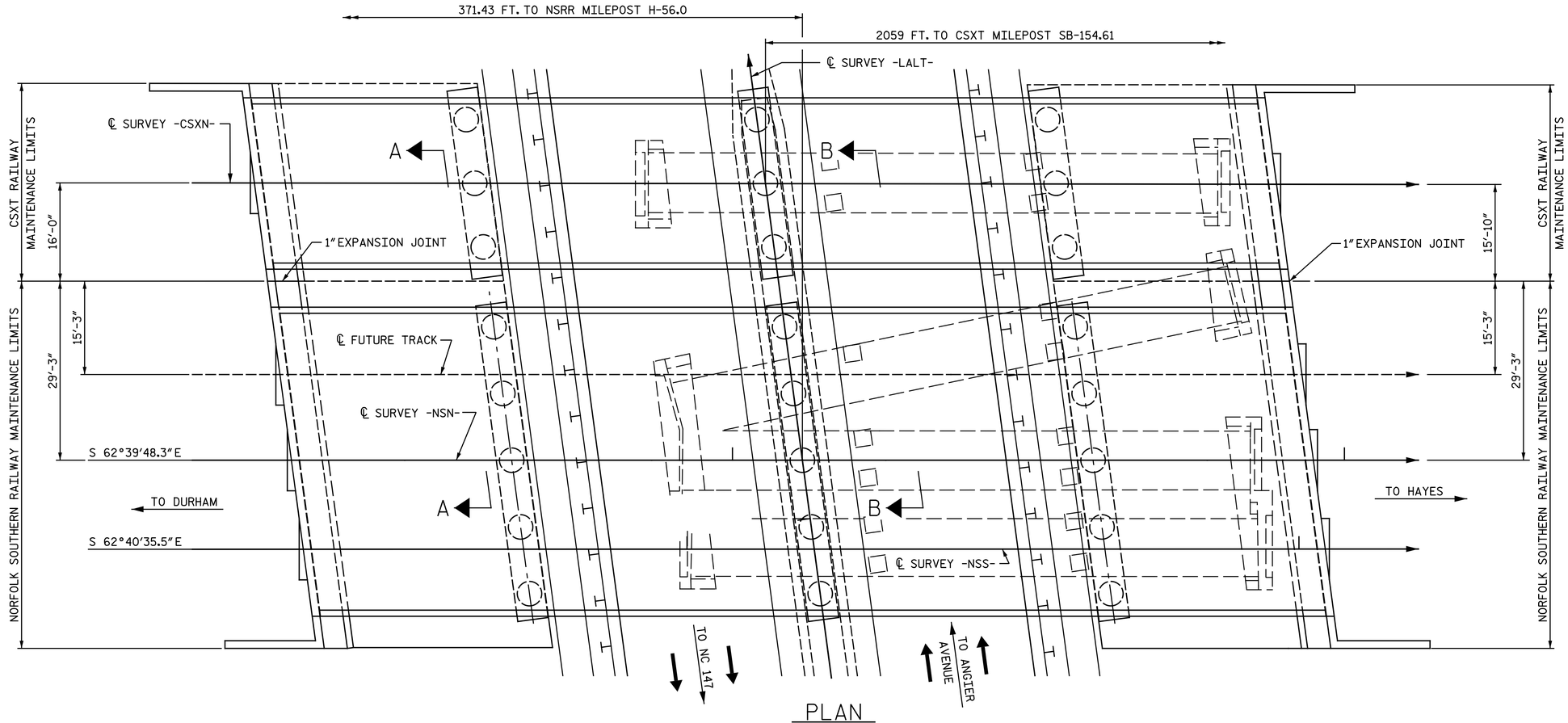

PLAN
(ABUTMENTS AND PIERS ARE PARALLEL)

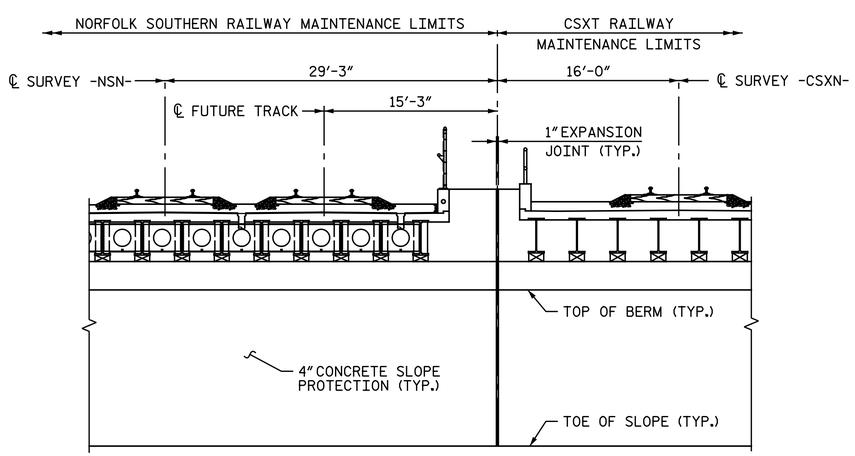

SECTION A-A
SCALE: N.T.S

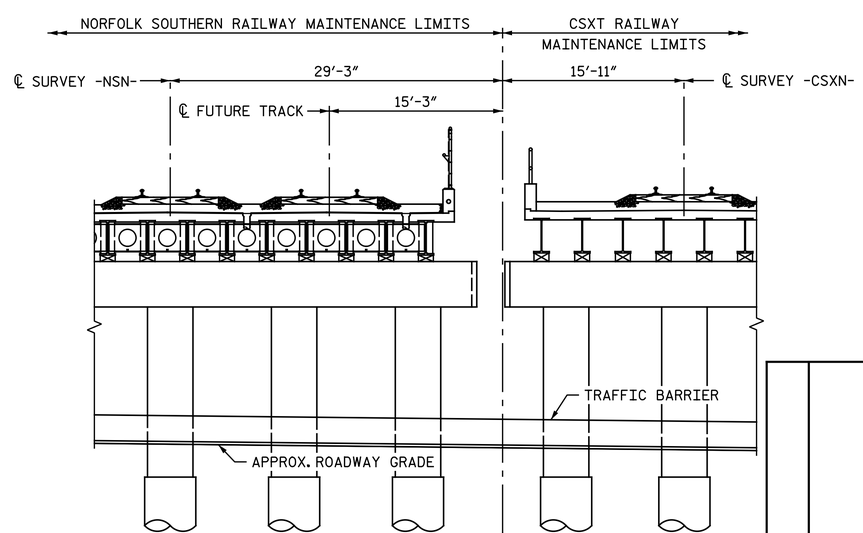

SECTION B-B
SCALE: N.T.S

PROJECT NO. U-3308
DURHAM COUNTY
STATION: 24+55.20 -LALT-
13+22.18 -CSXN-

NORTH CAROLINA PROFESSIONAL SEAL 25911 ENGINEER DUAIN C. HATHAWAY

DocuSigned by: Duain Hathaway
2837B07C1CA0460...
5/3/2016

STATE OF NORTH CAROLINA
DEPARTMENT OF TRANSPORTATION
RALEIGH

MAINTENANCE LIMITS

BRIDGES ON NSRR AND CSXT OVER NC 55 (ALSTON AVE.) BETWEEN NC 147 & ANGIER AVE.

Michael Baker INTERNATIONAL
Michael Baker Engineering
8000 Regency Parkway, Suite 600
Cary, North Carolina 27518
NC License No.: F-1084

REVISIONS						
NO.	BY:	DATE:	NO.	BY:	DATE:	
1			3			
2			4			

SHEET NO. S4-6
TOTAL SHEETS 68

DRAWN BY : NMC DATE : 12-13
CHECKED BY : DJM DATE : 12-13

amayhew
5/3/2016 9:36:59 AM
Filename: Y:\Projects\NCDOT\U-3308\Structures\Dwgs\Final\404_006_U3308_SMU_ML.dgn

SITE 4

DocuSign Envelope ID: 34E2C66B-7797-4AB6-9BD3-31F0D6E698EB

RAIL TRAFFIC STAGING:

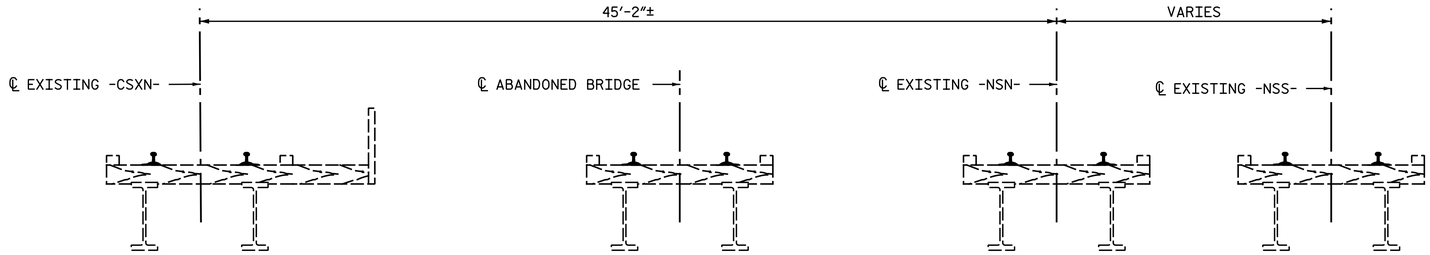

EXISTING

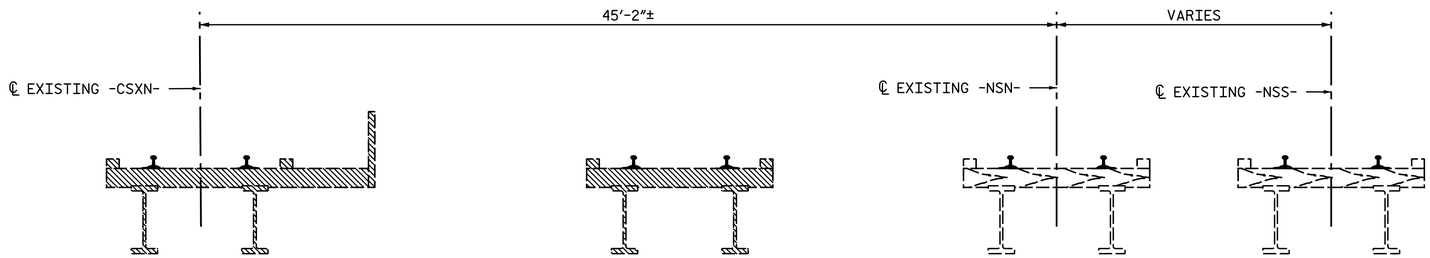

STAGE 1

STAGE 1

REMOVE EXISTING -CSXN- BRIDGE AND EXISTING ABANDONED BRIDGE.

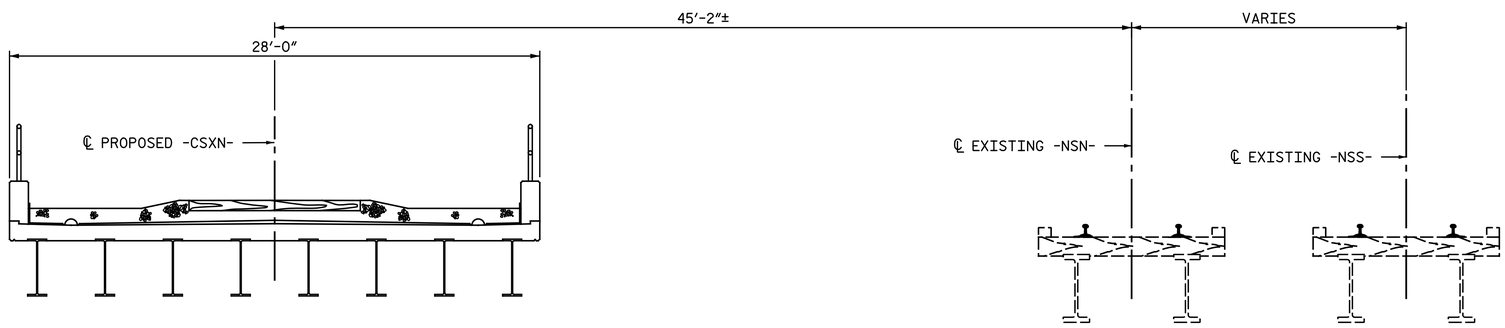

STAGE 2 (SPANS A, B, & D)

STAGE 2 (SPANS A, B, &D)

INSTALL SHORING 1 NEAR EXISTING -NSN- BRIDGE TO FACILITATE CONSTRUCTION OF PROPOSED -CSXN- BRIDGE. SEE TEMPORARY SHORING OF THE -NSN-/-NSS- BRIDGE PLANS FOR LOCATION OF SHORING 1.

(ADDITIONAL SHORING MAY BE REQUIRED AT PROPOSED PIER 2 TO PROTECT EXISTING ALSTON AVE. AND FOR PROPOSED -NSN-/-NSS- AND -CSXN- BRIDGE CONSTRUCTION.)

CONSTRUCT PROPOSED -CSXN- BRIDGE SPANS A, B, AND D.

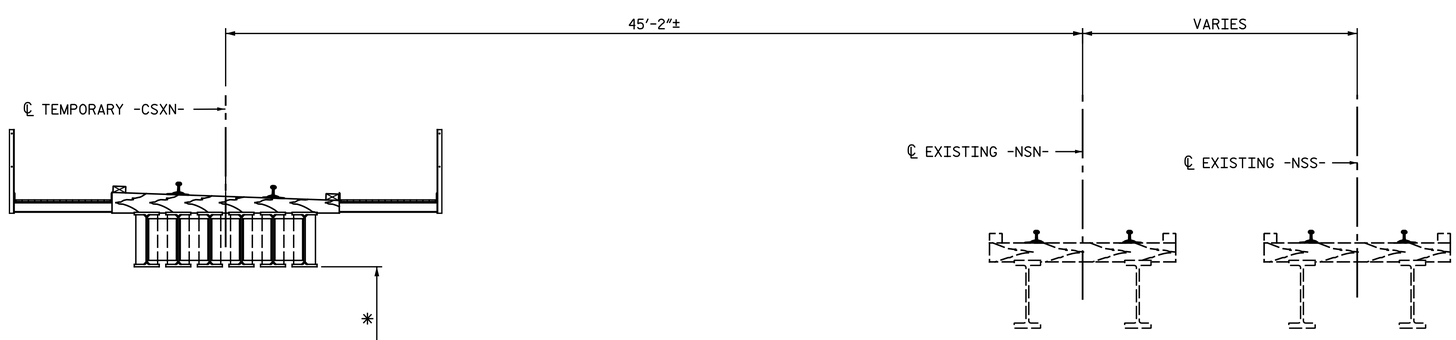

STAGE 2 (SPAN C)

STAGE 2 (SPAN C)

CONSTRUCT PROPOSED TEMPORARY SPAN C OF PROPOSED -CSXN- BRIDGE.

* TEMPORARY MINIMUM VERTICAL CLEARANCE TO EXISTING ALSTON AVE. = 14'-5"

PROJECT NO. U-3308

DURHAM COUNTY

STATION: 24+55.20 -LALT-
13+22.18 -CSXN-

SHEET 1 OF 2

NORTH CAROLINA PROFESSIONAL SEAL 25911 ENGINEER DWAIN G. HATHAWAY

DocuSigned by: Dwain Hathaway 283786071CA0460...

5/3/2016

STATE OF NORTH CAROLINA
DEPARTMENT OF TRANSPORTATION
RALEIGH

CONSTRUCTION STAGING

Michael Baker INTERNATIONAL

Michael Baker Engineering
8000 Regency Parkway, Suite 800
Cary, North Carolina 276518
NC License No.: F-1084

REVISIONS								SHEET NO.
NO.	BY:	DATE:	NO.	BY:	DATE:			S4-7
1			3					TOTAL SHEETS
2			4					68

DRAWN BY : J. N. AUSTIN DATE : 8-23-12
CHECKED BY : S. A. DENNEY DATE : 8-24-12

STV/ Ralph Whitehead Associates, Inc.
1000 West Morehead St., Ste. 200
Charlotte, NC 28208
NC License No. F-0991

cmayhew 5/3/2016 9:37:00 AM
Filename: Y:\Projects\NCDOT\U-3308\Structures\Dwgs\Final\404_007_U3308_SMU_PC01.dgn

SITE 4

DocuSign Envelope ID: 34E2C66B-7797-4AB6-9BD3-31F0D6E698EB

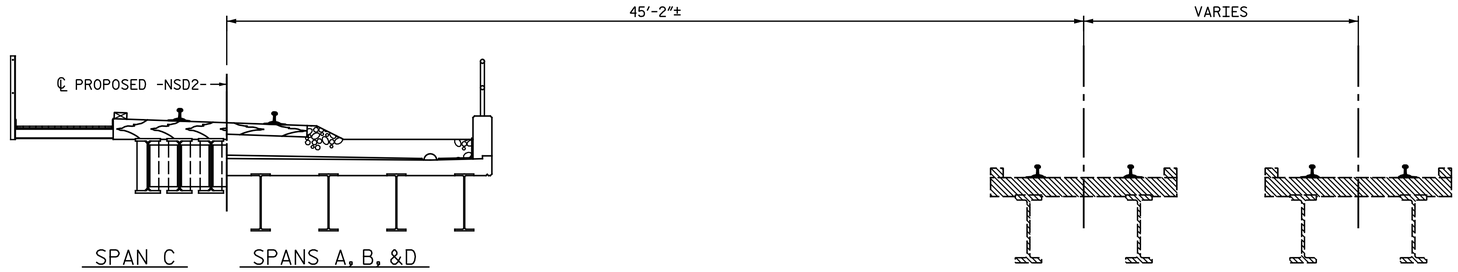

STAGE 3

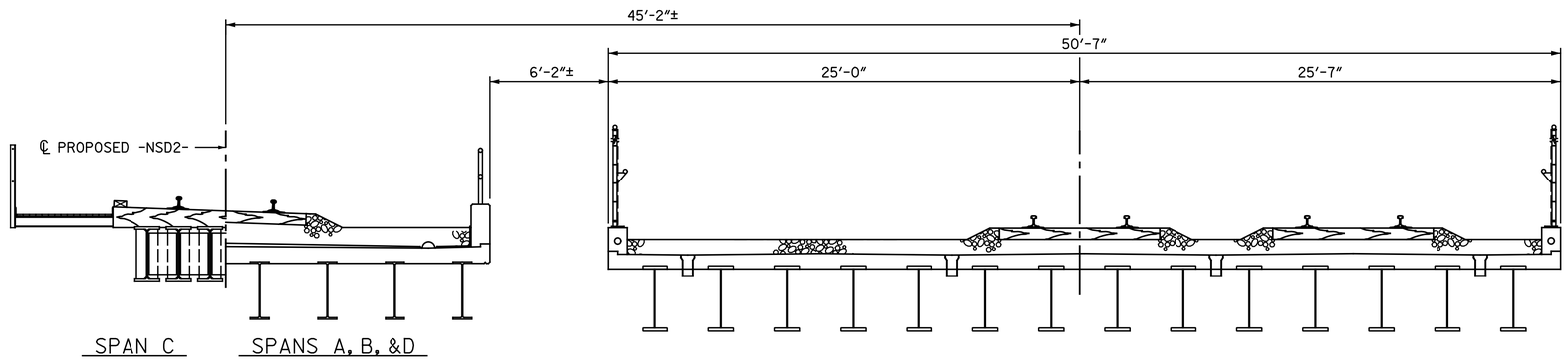

STAGE 4

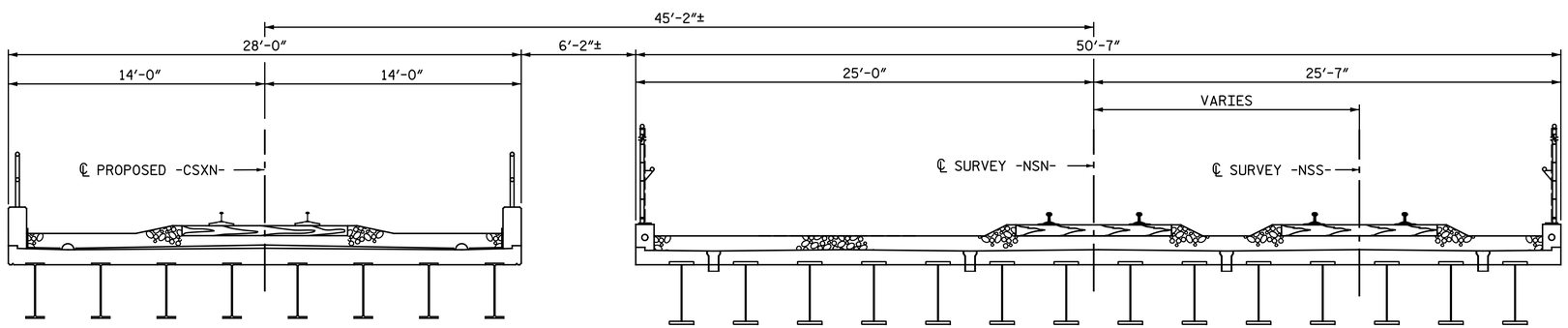

STAGE 5

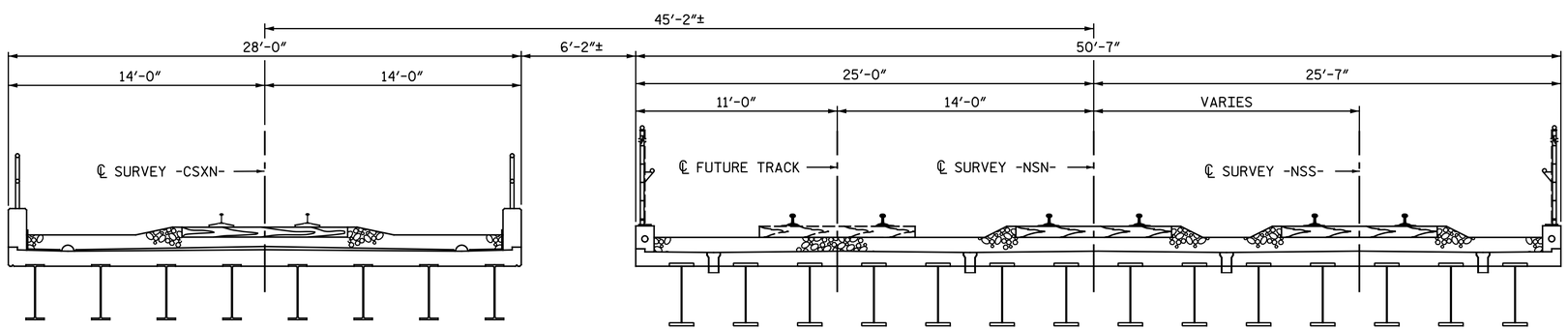

FINAL

RAIL TRAFFIC STAGING CONT'D:

STAGE 3

INSTALL SHORING 2 AND 3 TO MAINTAIN RAIL TRAFFIC ON -NSD2- TRACK. SEE TEMPORARY SHORING OF THE -NSN-/-NSS- BRIDGE PLANS FOR LOCATION OF SHORING 2 AND 3.

CONSTRUCT PROPOSED -NSD2- TRACK.

SHIFT ALL RAIL TRAFFIC TO PROPOSED -NSD2- TRACK.

REMOVE EXISTING -NSN- AND -NSS- BRIDGES.

STAGE 4

CONSTRUCT PROPOSED -NSN- AND -NSS- BRIDGE.

STAGE 5

SHIFT ALL RAIL TRAFFIC TO -NSN- AND -NSS- BRIDGE. REMOVE PROPOSED -NSD2- TRACK, AND TEMPORARY SPAN C OF PROPOSED -CSXN- BRIDGE.

COMPLETE CONSTRUCTION OF -CSXN- BRIDGE/TRACK.

FINAL

SHIFT -CSXN- RAIL TRAFFIC TO PROPOSED -CSXN- BRIDGE.

PROJECT NO. U-3308

DURHAM COUNTY

STATION: 24+55.20 -LALT-
13+22.18 -CSXN-

SHEET 2 OF 2

NORTH CAROLINA PROFESSIONAL SEAL 25911 ENGINEER DUWAIN G. HATHAWAY

DocuSigned by: Duwain Hathaway
5/3/2016

STATE OF NORTH CAROLINA
DEPARTMENT OF TRANSPORTATION
RALEIGH

CONSTRUCTION STAGING

Michael Baker INTERNATIONAL

Michael Baker Engineering
8000 Regency Parkway, Suite 600
Cary, North Carolina 276518
NC License No. : F-1084

REVISIONS							SHEET NO.
NO.	BY:	DATE:	NO.	BY:	DATE:		S4-8
1			3				TOTAL SHEETS
2			4				68

DRAWN BY : J. N. AUSTIN DATE : 8-23-12
CHECKED BY : S. A. DENNEY DATE : 8-24-12

STV/ Ralph Whitehead Associates, Inc.
1000 West Morehead St., Ste. 200
Charlotte, NC 28208
NC License No. F-0991

cmayhew 5/3/2016 9:37:00 AM
Filename: Y:\Projects\NCDOT\U-3308\Structures\Dwgs\Final\404_008_U3308_SMU_PC02.dgn

SITE 4

DocuSign Envelope ID: 34E2C66B-7797-4AB6-9BD3-31F0D6E698EB

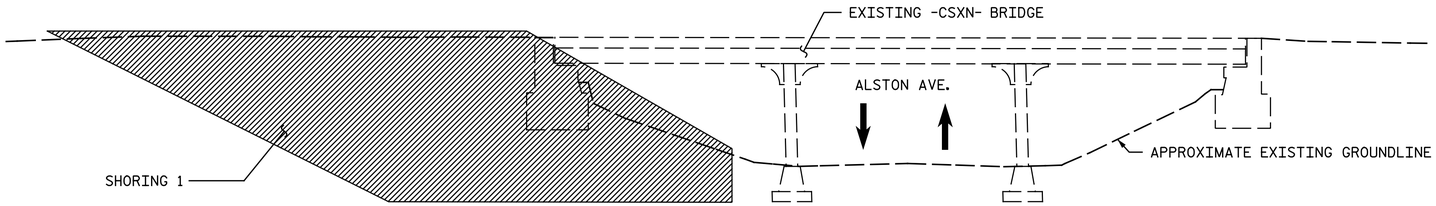

STAGE 1

(SECTION ALONG EXISTING -CSXN- BRIDGE)

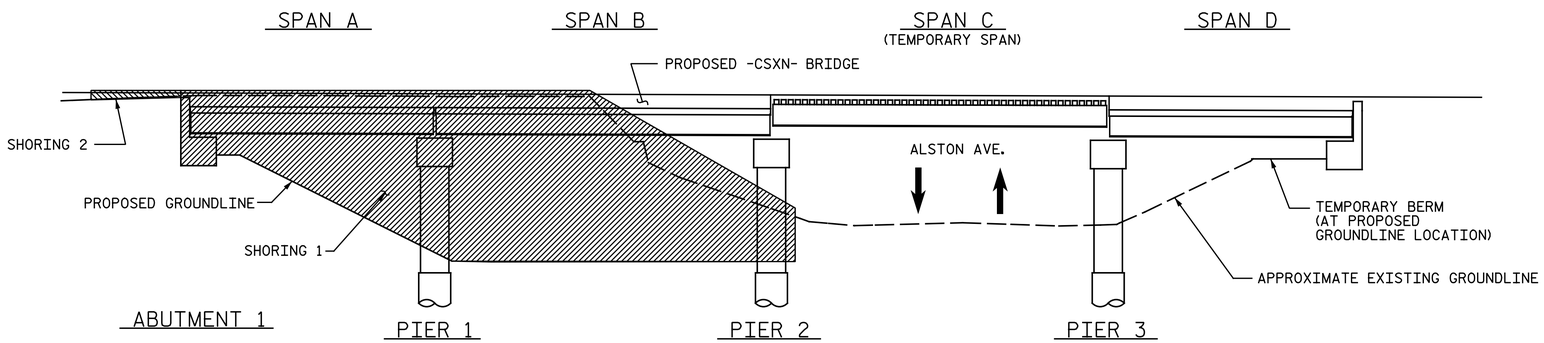

STAGE 2, 3 & 4

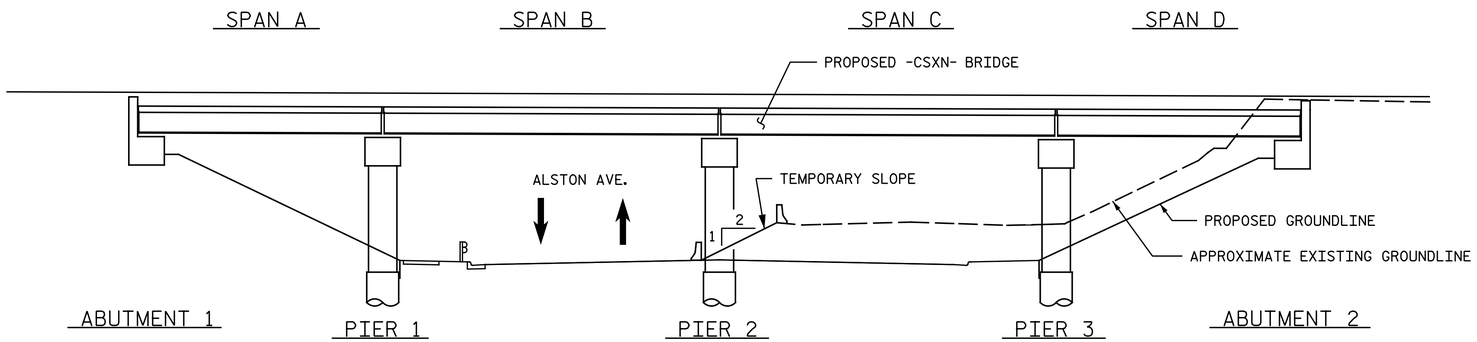

STAGE 5

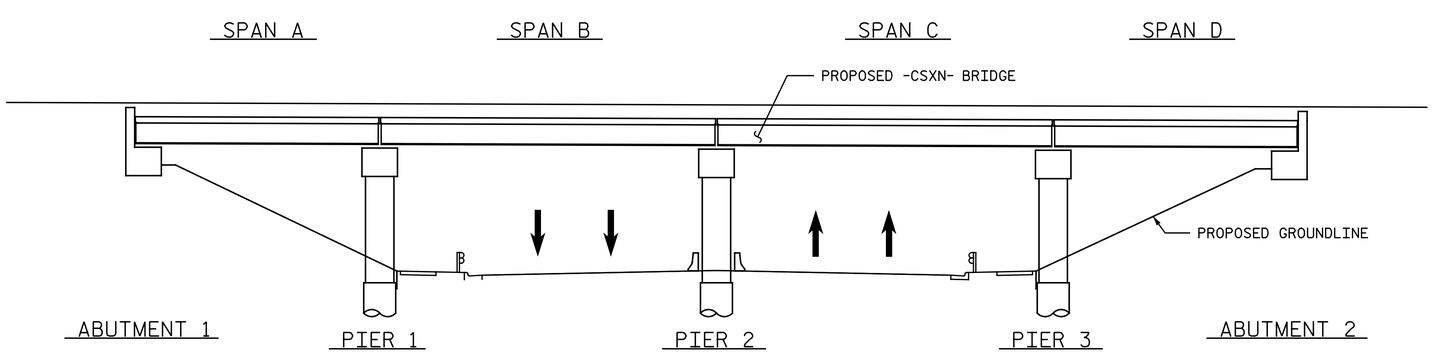

FINAL

TRAFFIC STAGING:

NOTES: SEE RAIL TRAFFIC STAGING ON "CONSTRUCTION STAGING" SHEETS FOR ADDITIONAL INFORMATION.

TRAFFIC STAGING BELOW SHALL BE IN CONJUNCTION WITH TRAFFIC STAGING SHOWN ON PLANS FOR BRIDGE ON NSRR.

REFER TO TRACKWORK PLANS FOR TEMPORARY DETOUR PROFILE.

STAGE 1

ALSTON AVE. TRAFFIC TO REMAIN IN ORIGINAL POSITION.

REMOVE EXISTING -CSXN- BRIDGE AND EXISTING ABANDONED BRIDGE.

INSTALL SHORING 1 BETWEEN EXISTING -CSXN- BRIDGE AND EXISTING -NSN- BRIDGE. TO FACILITATE CONSTRUCTION OF PROPOSED -CSXN- BRIDGE. SEE TEMPORARY SHORING OF THE -NSN-/-NSS- BRIDGE PLANS FOR SHORING 1 LOCATION.

STAGE 2, 3 & 4

EXCAVATE IN SHORING 1 AREA AND CONSTRUCT PROPOSED -CSXN- BRIDGE SPANS A, B AND D. CONSTRUCT TEMPORARY SPAN C.

A TEMPORARY BERM WILL BE REQUIRED AT ABUTMENT 2 TO CONNECT PROPOSED GROUNDLINE TO EXISTING GROUNDLINE.

INSTALL SHORING 2 AND 3 BETWEEN SHORING 1 AND ABUTMENT 1 OF PROPOSED -CSXN- BRIDGE, PRIOR TO SHIFTING RAIL TRAFFIC TO -NSD2- TRACK, TO MAINTAIN RAIL TRAFFIC. SEE TEMPORARY SHORING OF THE -NSN-/-NSS- BRIDGE PLANS FOR SHORING 2 AND 3 LOCATION.

STAGE 5

SHIFT ALSTON AVE. TRAFFIC TO CONSTRUCTED ROADWAY UNDER SPAN B OF CONSTRUCTED -CSXN- BRIDGE.

AFTER COMPLETION OF -NSN-/-NSS- BRIDGE AND RAIL TRAFFIC HAS BEEN SHIFTED ONTO COMPLETED -NSN-/-NSS- BRIDGE, REMOVE SHORING 2 AND 3 AND TEMPORARY SPAN C.

EXCAVATE REMAINDER OF EXISTING GROUND AND CONSTRUCT PROPOSED SPANS C OF -CSXN- BRIDGE. CONSTRUCT REMAINDER OF ROADWAY FOR ALSTON AVE.

FINAL

SHIFT ALSTON AVE. TRAFFIC TO FINAL POSITIONS.

PROJECT NO. U-3308

DURHAM COUNTY

STATION: 24+55.20 -LALT-
13+22.18 -CSXN-

NORTH CAROLINA PROFESSIONAL SEAL 25911 ENGINEER DWAIN G. HATHAWAY

DocuSigned by: Dwain Hathaway 283786071DA0460...

5/3/2016

Michael Baker INTERNATIONAL

Michael Baker Engineering
8000 Regency Parkway, Suite 600
Cary, North Carolina 276518
NC License No.: F-1084

STATE OF NORTH CAROLINA
DEPARTMENT OF TRANSPORTATION
RALEIGH

STAGING

REVISIONS								SHEET NO.
NO.	BY:	DATE:	NO.	BY:	DATE:			S4-9
1			3					TOTAL SHEETS
2			4					68

DRAWN BY : TJT / JNA DATE : 6-14-07
CHECKED BY : KGB / DGH DATE : 6-14-07

STV/ Ralph Whitehead Associates, Inc.
1000 West Morehead St., Ste. 200
Charlotte, NC 28208
NC License No. F-0991

amayhew
5/3/2016 9:37:01 AM
Filename: Y:\Projects\NCDOT\U-3308\Structures\Dwgs\Final\404_009_U3308_SMU_PC03.dgn

SITE 4

DocuSign Envelope ID: 34E2C66B-7797-4AB6-9BD3-31F0D6E698EB

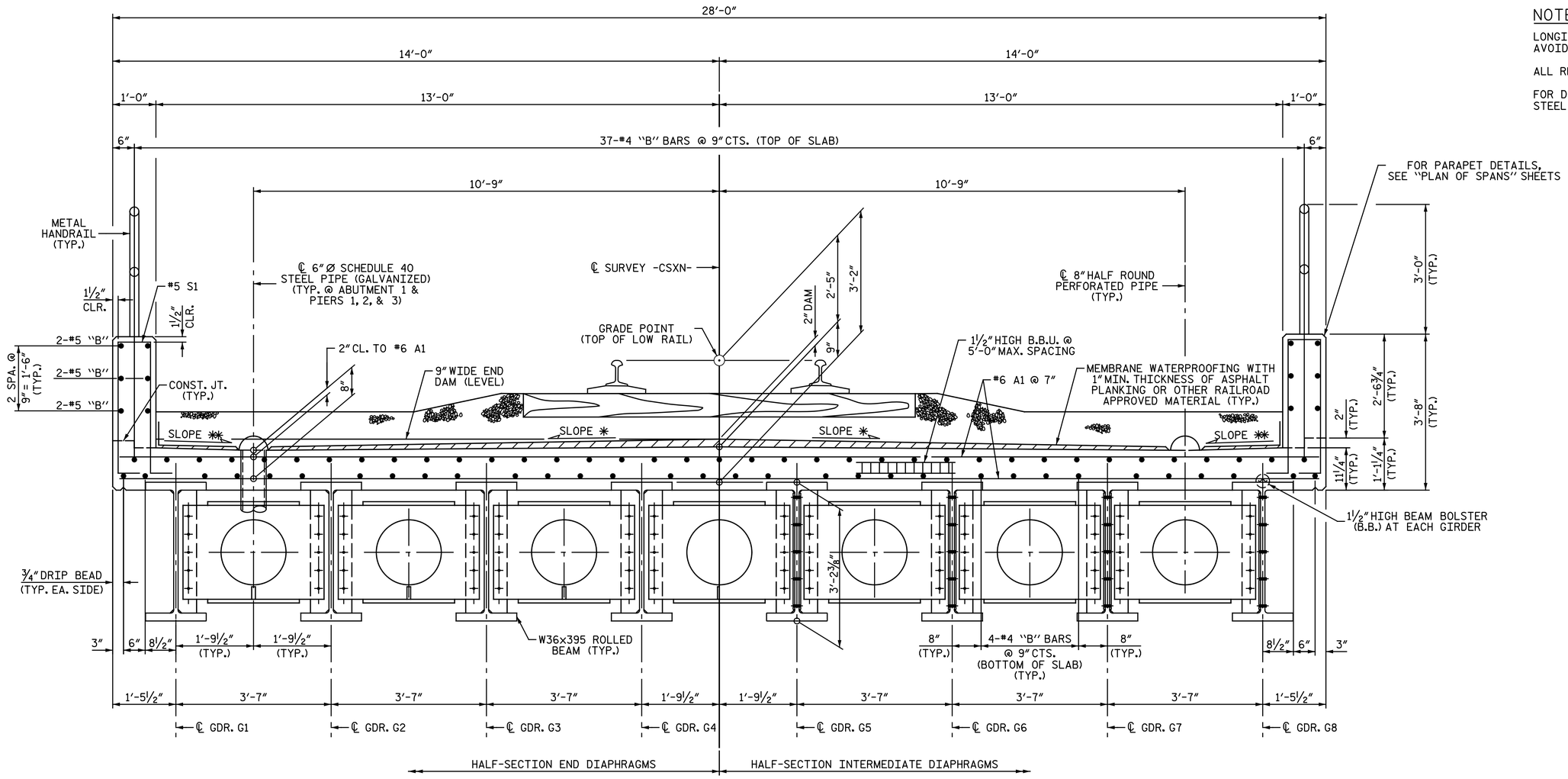

PROPOSED TYPICAL SECTION

* SLOPE = 0.0078
** SLOPE = 0.0370

NOTES:

LONGITUDINAL BARS MAY BE SHIFTED TO AVOID DRAINS IN BRIDGE DECK.

ALL REINFORCING STEEL TO BE EPOXY COATED.

FOR DIAPHRAGM DETAILS, SEE "STRUCTURAL STEEL DIAPHRAGM DETAILS" SHEET.

PROJECT NO. U-3308
DURHAM COUNTY
STATION: 24+55.20 -LALT-
13+22.18 -CSXN-

NORTH CAROLINA PROFESSIONAL SEAL 25911 ENGINEER DUAIN G. HATHAWAY

Docusigned by: Duain Hathaway
5/3/2016

Michael Baker INTERNATIONAL
Michael Baker Engineering
8000 Regency Parkway, Suite 600
Cary, North Carolina 27518
NC License No.: F-1084

STATE OF NORTH CAROLINA
DEPARTMENT OF TRANSPORTATION
RALEIGH

SUPERSTRUCTURE

TYPICAL SECTION

REVISIONS						
NO.	BY:	DATE:	NO.	BY:	DATE:	
1			3			
2			4			

SHEET NO. S4-10
TOTAL SHEETS 68

DRAWN BY : M. D. MAYHEW DATE : 12-18-13
CHECKED BY : S. A. DENNEY DATE : 12-31-13

cmayhew 5/3/2016 9:37:02 AM
Filename: Y:\Projects\NCDOT\U-3308\Structures\Dwgs\Find\404_010_U3308_SMU_TS.dgn

SITE 4

DocuSign Envelope ID: 34E2C66B-7797-4AB6-9BD3-31F0D6E698EB

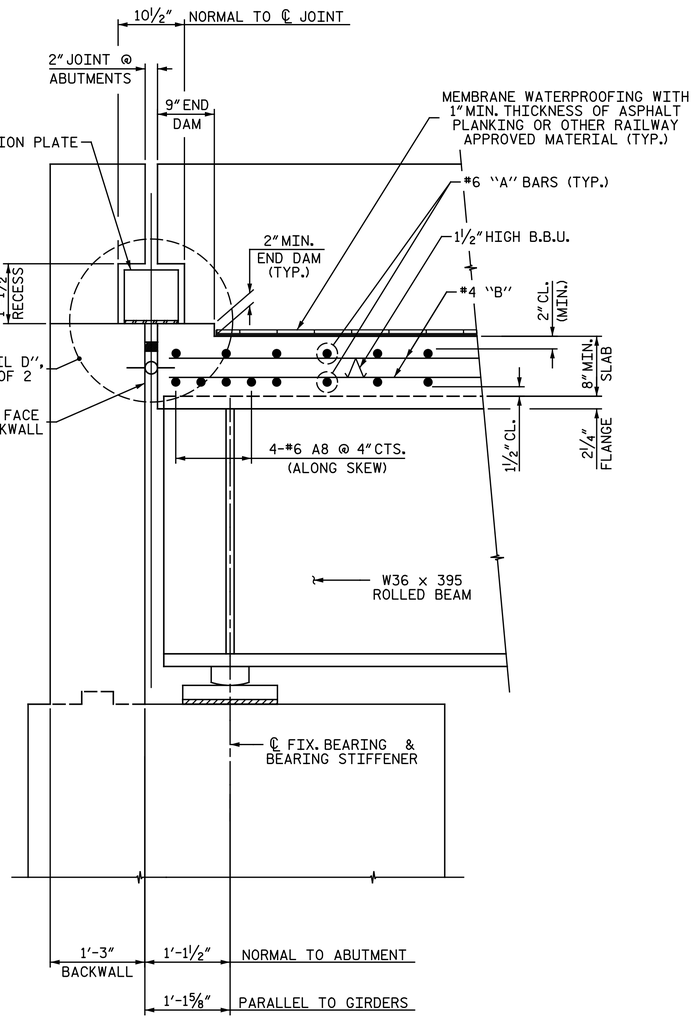

SECTION A-A

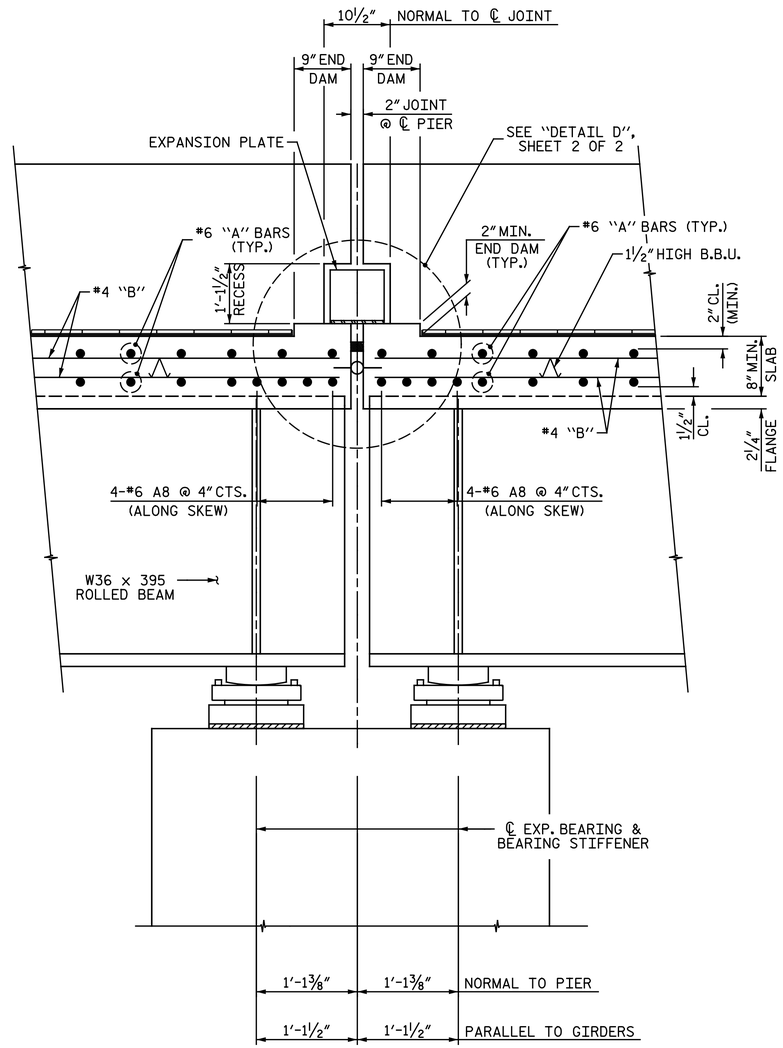

SECTION B-B

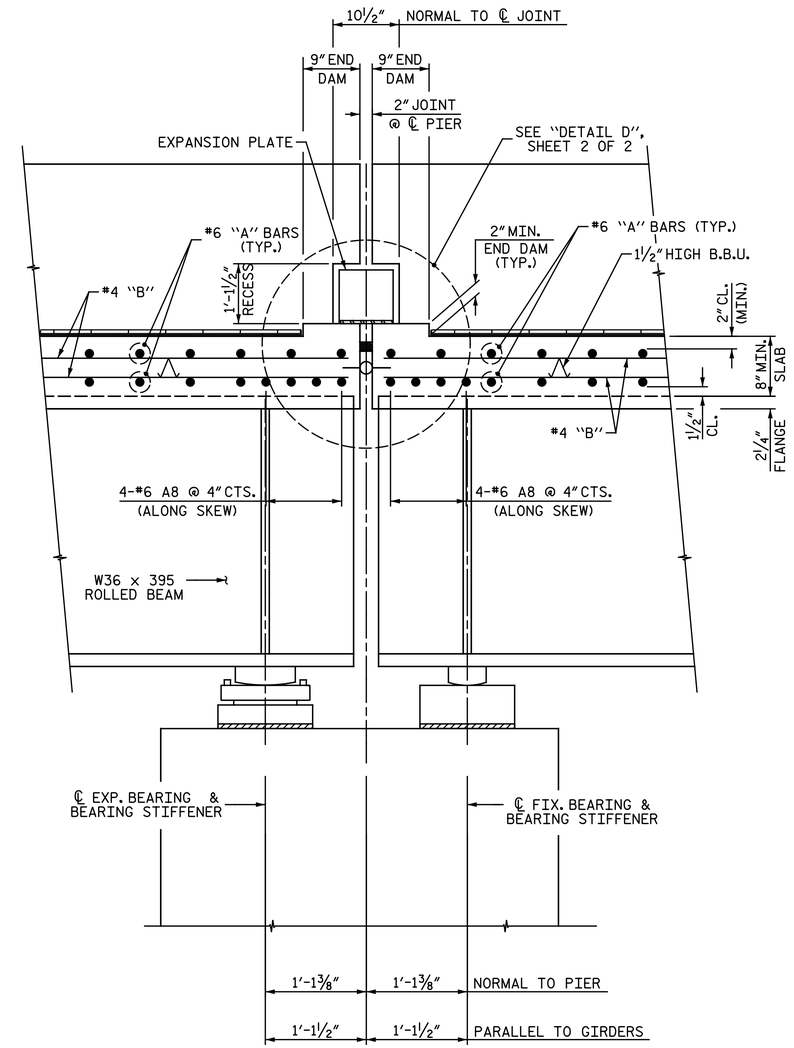

SECTION C-C

PROJECT NO. U-3308

DURHAM COUNTY

STATION: 24+55.20 -LALT-
13+22.18 -CSXN-

SHEET 1 OF 2

NORTH CAROLINA PROFESSIONAL SEAL 25911 ENGINEER DWAIN G. HATHAWAY

DocuSigned by: Dwain Hathaway
2837B0071CA0460...

5/3/2016

Michael Baker INTERNATIONAL

Michael Baker Engineering
8000 Regency Parkway, Suite 600
Cary, North Carolina 276518
NC License No.: F-1084

STATE OF NORTH CAROLINA
DEPARTMENT OF TRANSPORTATION
RALEIGH

SUPERSTRUCTURE

CONCRETE DECK DETAILS

REVISIONS								SHEET NO.
NO.	BY:	DATE:	NO.	BY:	DATE:			S4-11
1			3					TOTAL SHEETS
2			4					68

DRAWN BY : C. E. MAYHEW DATE : 3-13-13
CHECKED BY : S. A. DENNEY DATE : 12-31-13

cmayhew 5/3/2016 9:37:02 AM
Filename: Y:\Projects\NCDOT\U-3308\Structures\Dwgs\Final\404_011_U3308_SMU_CD01.dgn

SITE 4

DocuSign Envelope ID: 34E2C66B-7797-4AB6-9BD3-31F0D6E698EB

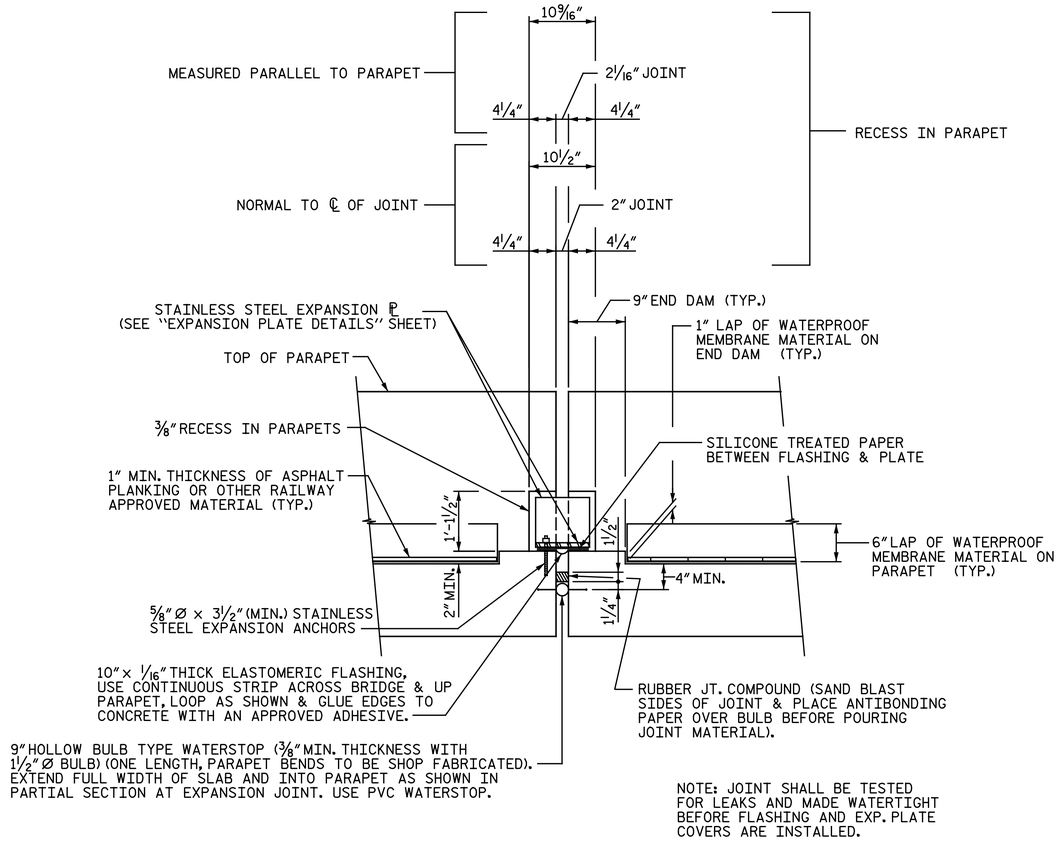

NOTE: JOINT SHALL BE TESTED FOR LEAKS AND MADE WATERTIGHT BEFORE FLASHING AND EXP. PLATE COVERS ARE INSTALLED.

DETAIL D

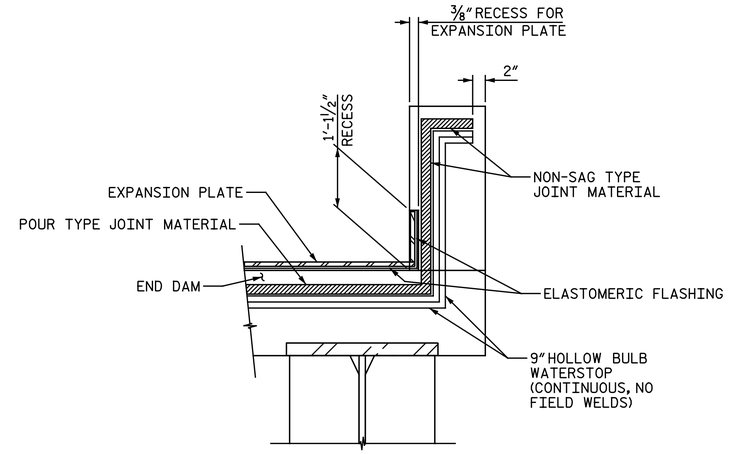

PART SECTION AT EXPANSION JOINT

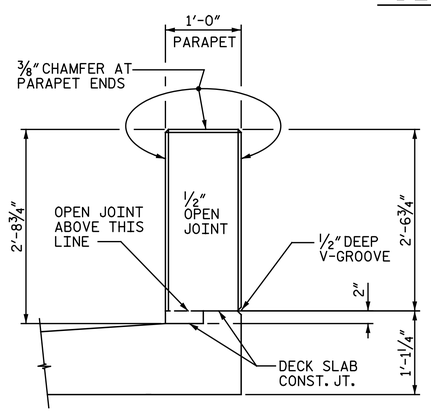

SECTION THRU OPEN JOINT IN PARAPET

PROJECT NO. U-3308

DURHAM COUNTY

STATION: 24+55.20 -LALT-
13+22.18 -CSXN-

SHEET 2 OF 2

NORTH CAROLINA PROFESSIONAL SEAL 25911 ENGINEER DWAIN C. HATHAWAY

DocuSigned by: Dwain Hathaway 2837B9D71DA0460...

5/3/2016

STATE OF NORTH CAROLINA
DEPARTMENT OF TRANSPORTATION
RALEIGH

SUPERSTRUCTURE

CONCRETE DECK DETAILS

Michael Baker INTERNATIONAL

Michael Baker Engineering
8000 Regency Parkway, Suite 600
Cary, North Carolina 276518
NC License No.: F-1084

REVISIONS						
NO.	BY:	DATE:	NO.	BY:	DATE:	
1			3			
2			4			

SHEET NO. S4-12

TOTAL SHEETS 68

DRAWN BY : C. E. MAYHEW DATE : 3-13-13
CHECKED BY : S. A. DENNEY DATE : 12-31-13

cmayhew
5/3/2016 9:37:03 AM
Filename: Y:\Projects\NCDOT\U-3308\Structures\Dwgs\Final\404_012_U3308_SMU_CD02.dgn

SITE 4

DocuSign Envelope ID: 34E2C66B-7797-4AB6-9BD3-31F0D6E698EB

NOTES:

ALL REINFORCING STEEL TO BE EPOXY COATED.

FOR "SECTION A-A", SEE "CONCRETE DECK DETAILS" SHEET 1 OF 2.

FOR "SECTION B-B", SEE "CONCRETE DECK DETAILS" SHEET 1 OF 2.

FOR "SECTION C-C", SEE "CONCRETE DECK DETAILS" SHEET 1 OF 2.

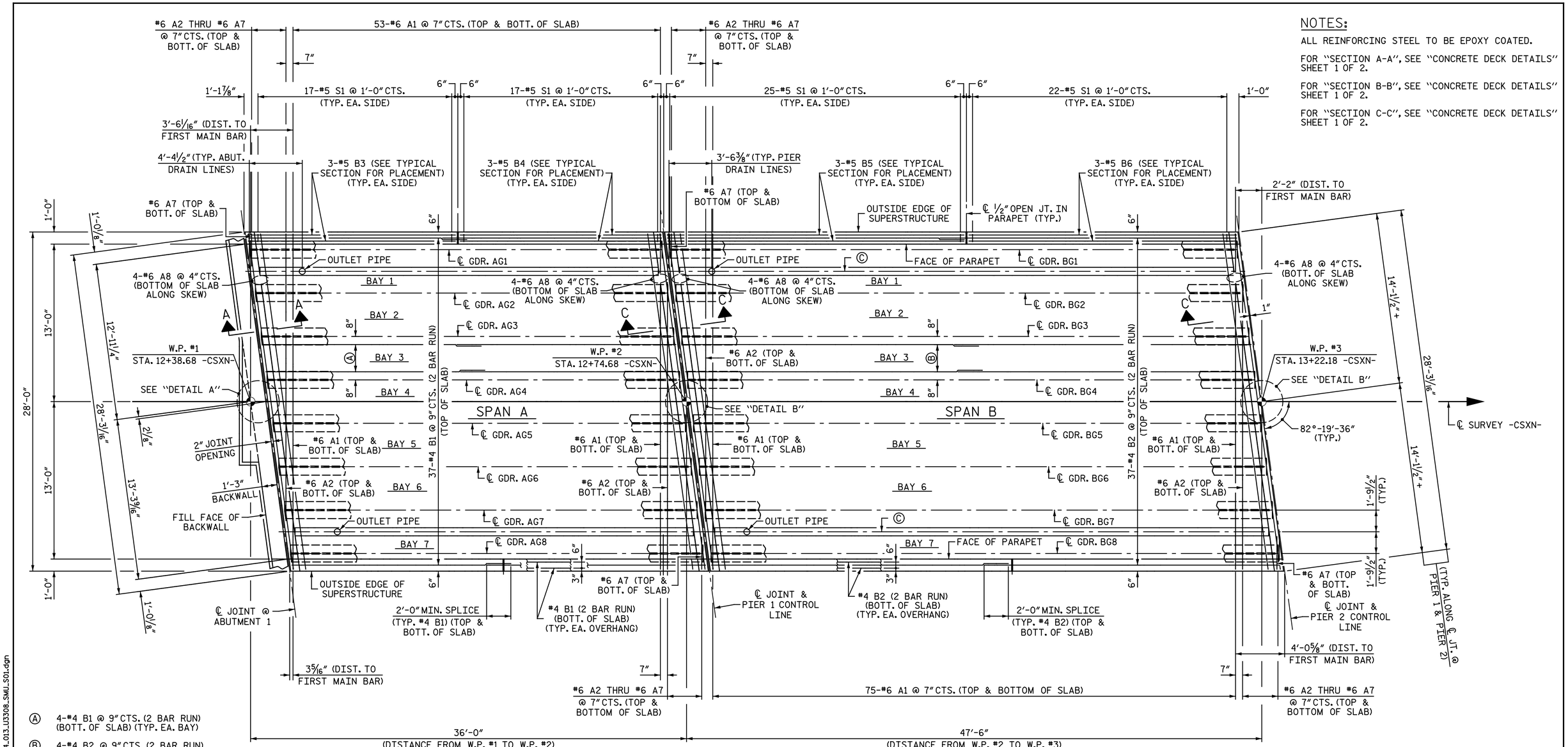

Ⓐ 4-#4 B1 @ 9" CTS. (2 BAR RUN) (BOTT. OF SLAB) (TYP. EA. BAY)

Ⓑ 4-#4 B2 @ 9" CTS. (2 BAR RUN) (BOTT. OF SLAB) (TYP. EA. BAY)

Ⓒ ℄ 12 GAUGE STEEL PAN (GALVANIZED & BITUMINOUS COATED)

PLAN OF SPANS

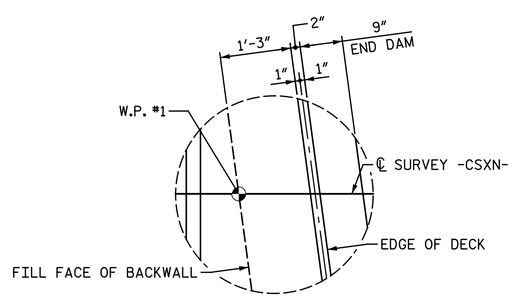

DETAIL A

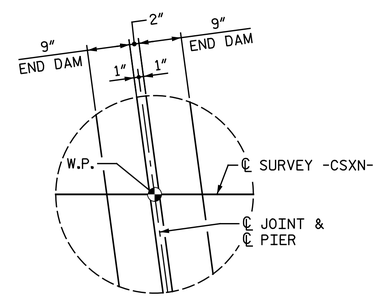

DETAIL B

PROJECT NO. U-3308

DURHAM COUNTY

STATION: 24+55.20 -LALT- / 13+22.18 -CSXN-

SHEET 1 OF 2

NORTH CAROLINA PROFESSIONAL SEAL 25911 ENGINEER DWAIN G. HATHAWAY

DocuSigned by: Dwain Hathaway 283786071DA0460...

5/3/2016

STATE OF NORTH CAROLINA
DEPARTMENT OF TRANSPORTATION
RALEIGH

SUPERSTRUCTURE

PLAN OF SPANS

SPANS A & B

Michael Baker INTERNATIONAL

Michael Baker Engineering
8000 Regency Parkway, Suite 600
Cary, North Carolina 276518
NC License No.: F-1084

REVISIONS							SHEET NO.
NO.	BY:	DATE:	NO.	BY:	DATE:		S4-13
1			3				TOTAL SHEETS
2			4				68

DRAWN BY : M. D. MAYHEW DATE : 12-19-13

CHECKED BY : S. A. DENNEY DATE : 12-31-13

SITE 4

amayhew 5/3/2016 9:37:03 AM
Filename: Y:\Projects\NCDOT\U-3308\Structures\Dwgs\Final\404_013_U3308_SMU_S01.dgn

DocuSign Envelope ID: 34E2C66B-7797-4AB6-9BD3-31F0D6E698EB

NOTES:

ALL REINFORCING STEEL TO BE EPOXY COATED.

FOR "DETAIL B", SEE "SHEET 1 OF 2".

FOR "SECTION A-A", SEE "CONCRETE DECK DETAILS" SHEET 1 OF 2.

FOR "SECTION B-B", SEE "CONCRETE DECK DETAILS" SHEET 1 OF 2.

FOR "SECTION C-C", SEE "CONCRETE DECK DETAILS" SHEET 1 OF 2.

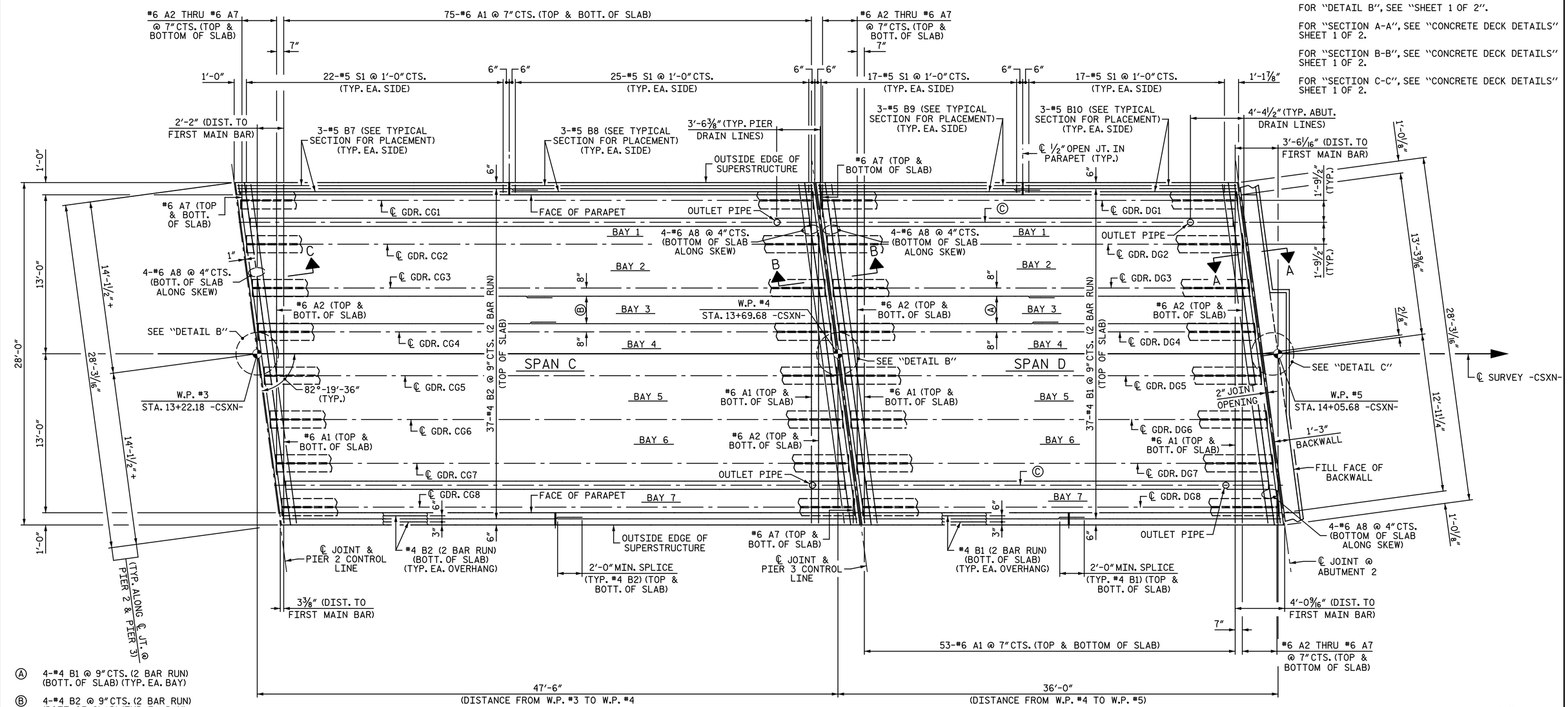

Ⓐ 4-#4 B1 @ 9" CTS. (2 BAR RUN) (BOTT. OF SLAB) (TYP. EA. BAY)

Ⓑ 4-#4 B2 @ 9" CTS. (2 BAR RUN) (BOTT. OF SLAB) (TYP. EA. BAY)

Ⓒ ℄ 12 GAUGE STEEL PAN (GALVANIZED & BITUMINOUS COATED)

PLAN OF SPANS

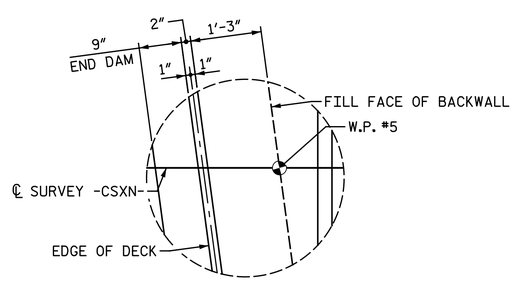

DETAIL C

PROJECT NO. U-3308

DURHAM COUNTY

STATION: 24+55.20 -LALT-
13+22.18 -CSXN-

SHEET 2 OF 2

NORTH CAROLINA PROFESSIONAL SEAL 25911 ENGINEER DWAIN C. HATHAWAY

DocuSigned by: Dwain Hathaway 2837B9D71C0D460...

5/3/2016

STATE OF NORTH CAROLINA
DEPARTMENT OF TRANSPORTATION
RALEIGH

SUPERSTRUCTURE

PLAN OF SPANS

SPANS C & D

Michael Baker INTERNATIONAL

Michael Baker Engineering
8000 Regency Parkway, Suite 600
Cary, North Carolina 27518
NC License No.: F-1084

REVISIONS						
NO.	BY:	DATE:	NO.	BY:	DATE:	
1			3			
2			4			

SHEET NO. S4-14

TOTAL SHEETS 68

DRAWN BY: M. D. MAYHEW DATE: 1-9-14
CHECKED BY: S. A. DENNEY DATE: 2-25-14

amayhew
5/3/2016 9:37:04 AM
Filename: Y:\Projects\NCDOT\U-3308\Structures\Dwgs\Final\404_014_U3308_SMU_S02.dgn

SITE 4

DocuSign Envelope ID: 34E2C66B-7797-4AB6-9BD3-31F0D6E698EB

STRUCTURAL STEEL NOTES

1. SPECIFICATIONS: AMERICAN RAILWAY ENGINEERING AND MAINTENANCE-OF-WAY ASSOCIATION (A.R.E.M.A.) MANUAL FOR RAILWAY ENGINEERING, 2014 EDITION.

   CURRENT CSX TRANSPORTATION CRITERIA FOR OPEN DECK RAILROAD BRIDGES.

   CURRENT NORFOLK SOUTHERN RAILWAY GUIDELINES FOR DESIGN OF GRADE SEPARATION STRUCTURES.

2. LIVE LOADS: COOPER E-80 WITHOUT HAMMER BLOW WITH FULL DESIGN IMPACT AS PER A.R.E.M.A.

3. STRUCTURAL STEEL SHALL BE IN ACCORDANCE WITH CSX TRANSPORTATION "SPECIFICATIONS FOR STRUCTURAL STEEL".

4. STRUCTURAL STEEL: ALL STRUCTURAL STEEL FOR FRACTURE CRITICAL MEMBERS (FCM) SHALL BE ASTM A709, GRADE 50F2, Fy = 50,000 PSI. NON-FRACTURE CRITICAL MEMBERS SHALL BE ASTM A709, GRADE 50T2. BEARING ASSEMBLIES SHALL BE ASTM A709 GRADE 50T2. ALL STRUCTURAL STEEL SHALL MEET THE REQUIREMENTS OF THE PROJECT SPECIAL PROVISION FOR STRUCTURAL STEEL FOR RAILROAD BRIDGES AND THE FOLLOWING REQUIREMENTS:

   1. THE MATERIAL SUPPLIED SHALL BE OTHER THAN RIMMED OR CAPPED STEEL.

   2. THE MATERIAL SUPPLIED SHALL BE SILCON-KILLED, FINE GRAIN PRACTICE.

   3. CERTAIN ELEMENTS OF THE STRUCTURE ARE NOTED AS "FRACTURE CRITICAL MEMBERS" (FCM) AND SHALL MEET THE REQUIREMENTS FOR "FRACTURE CONTROL PLAN FOR FRACTURE CRITICAL MEMBERS" OF SECTION 1.14, CHAPTER 15 OF THE A.R.E.M.A. MANUAL. THE IMPACT REQUIREMENTS FOR FRACTURE CRITICAL MEMBERS SHALL BE REQUIRED FOR ZONE 2 SERVICE TEMPERATURE. TEST RESULTS SHALL BE FURNISHED TO THE ENGINEER AND RAILROAD FOR THEIR USE.

   4. ANCHOR BOLTS FOR BEARING DEVICES SHALL CONFORM TO ASTM F1554 GRADE 55. ANCHOR BOLTS, NUT, AND PLATE WASHERS SHALL BE MECHANICALLY GALVANIZED IN ACCORDANCE WITH AASHTO M298.

5. ALL DIMENSIONS SHOWN ARE HORIZONTAL OR VERTICAL UNLESS OTHERWISE NOTED.

6. STRUCTURAL STEEL SHALL BE PAINTED IN ACCORDANCE WITH CSX TRANSPORTATION "SPECIFICATIONS FOR PAINTING STRUCTURAL STEEL".

7. BEARING STIFFENERS ARE TO BE PLACED NORMAL TO THE WEB OF THE GIRDER AND SHALL BE PLUMB.

8. FABRICATION: THE FABRICATOR SHALL BE CERTIFIED IN THE SIMPLE SPAN STEEL BRIDGE CATEGORY, UNDER THE AISC QUALITY CERTIFICATION PROGRAM.

9. FABRICATION OF ALL STEEL MEMBERS SHALL BE ACCORDING TO THE A.R.E.M.A. MANUAL FOR RAILWAY ENGINEERING, CHAPTER 15, PART 3 - FABRICATION.

10. MILL TEST REPORTS: CSX TRANSPORTATION AND NORFOLK SOUTHERN RAILWAY SHALL BE FURNISHED COPIES OF MILL TEST REPORTS FOR ALL MATERIALS EXCEPT MISCELLANEOUS PLATES AND SHAPES. REPORTS SHALL INDICATE COMPLIANCE WITH ALL SPECIFIED REQUIREMENTS.

11. INSPECTION: SHOP INSPECTION BY CSX TRANSPORTATION OR ITS AUTHORIZED AGENT.

12. SHOP DRAWINGS: SHOP DRAWINGS SHALL BE APPROVED BY THE CHIEF-ENGINEER BRIDGES, CSX TRANSPORTATION, JACKSONVILLE, FL.

13. HOLES: OPEN HOLES AS NOTED.

14. BOLTED CONNECTIONS SHALL BE MADE WITH 7/8" DIAMETER, ASTM A325, TYPE 1 HIGH STRENGTH BOLTS WITH HARDENED WASHERS IN ACCORDANCE WITH A.R.E.M.A. SPECIFICATIONS USING THE TURN OF THE NUT METHOD. DIRECT TENSION INDICATORS SHALL NOT BE USED.

15. HIGH STRENGTH BOLTS, NUTS & WASHERS: ASTM DESIGNATION A325. ALL HIGH STRENGTH BOLTS, NUTS & WASHERS SHALL BE MECHANICALLY GALVANIZED. HOT-DIPPED GALVANIZED BOLTS WILL NOT BE ALLOWED.

16. ANCHOR BOLTS: SHALL BE 1 1/4" Ø IN ACCORDANCE WITH A.R.E.M.A. SPECIFICATIONS AND SHALL BE GROUTED IN FORMED HOLES AFTER GIRDERS ARE ERECTED.

17. BEARING PADS SHALL BE USED WHENEVER STEEL MASONRY PLATE, OR OTHER STEEL BEARING PLATE, BEARS ON CONCRETE. PADS SHALL BE PREFORMED FABRIC BEARING PADS, 1/2" THICK, 31 PLY. PREFORMED FABRIC BEARING PADS SHALL BE SHOCK PAD (MIL-C-882C SPECIFICATIONS) STYLE NO. 15175 AS MANUFACTURED BY ALERT MANUFACTURING AND SUPPLY COMPANY, CHICAGO, ILLINOIS, OR FABREEKA PADS AS MANUFACTURED BY FABREEKA PRODUCTS COMPANY, BOSTON, MASSACHUSETTS, OR SORBTEX PADS AS MANUFACTURED BY VOSS ENGINEERING, INC., CHICAGO, ILLINOIS, OR APPROVED EQUAL.

18. NO CAMBER FOR GIRDERS REQUIRED, TURN NATURAL MILL CAMBER UP.

PROJECT NO. U-3308

DURHAM COUNTY

STATION: 24+55.20 -LALT-
13+22.18 -CSXN-

NORTH CAROLINA PROFESSIONAL SEAL 25911 ENGINEER DWAIN G. HATHAWAY

DocuSigned by: Dwain Hathaway
2B37B6071CAD460...

5/3/2016

STATE OF NORTH CAROLINA
DEPARTMENT OF TRANSPORTATION
RALEIGH

SUPERSTRUCTURE

STRUCTURAL STEEL NOTES

Michael Baker INTERNATIONAL

Michael Baker Engineering
8000 Regency Parkway, Suite 600
Cary, North Carolina 276518
NC License No.: F-1084

REVISIONS						SHEET NO.
NO.	BY:	DATE:	NO.	BY:	DATE:	S4-15
1			3			TOTAL SHEETS
2			4			68

SITE 4

DRAWN BY : C. E. MAYHEW DATE : 3-13-13
CHECKED BY : S. A. DENNEY DATE : 2-26-14

cmayhew
5/3/2016 9:37:05 AM
Filename: Y:\Projects\NCDOT\U-3308\Structures\Dwgs\Final\404_015_U3308_SMU_SSN.dgn

DocuSign Envelope ID: 34E2C66B-7797-4AB6-9BD3-31F0D6E698EB

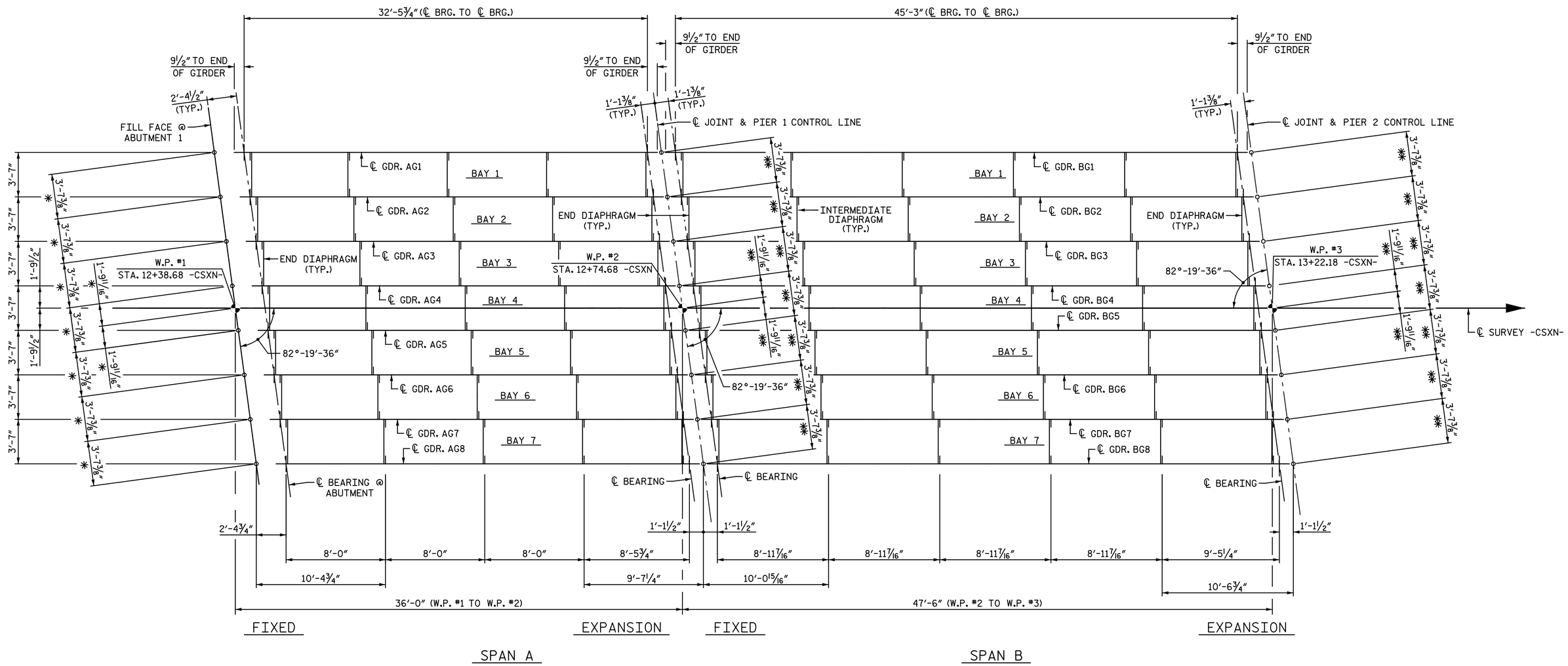

FRAMING PLAN

✱ MEASURED ALONG FILL FACE @ ABUTMENT

✱✱ MEASURED ALONG ℄ JOINT & ℄ PIER

PROJECT NO. U-3308

DURHAM COUNTY

STATION: 24+55.20 -LALT-
13+22.18 -CSXN-

SHEET 1 OF 2

STATE OF NORTH CAROLINA
DEPARTMENT OF TRANSPORTATION
RALEIGH

SUPERSTRUCTURE

GIRDER LAYOUT

SPANS A & B

NORTH CAROLINA PROFESSIONAL SEAL 25911 ENGINEER DWAIN G. HATHAWAY

DocuSigned by: Dwain Hathaway 283786071DAD460...

5/3/2016

Michael Baker INTERNATIONAL

Michael Baker Engineering
8000 Regency Parkway, Suite 600
Cary, North Carolina 276518
NC License No.: F-1084

REVISIONS						
NO.	BY:	DATE:	NO.	BY:	DATE:	
1			3			
2			4			

SHEET NO. S4-16

TOTAL SHEETS 68

DRAWN BY : M. D. MAYHEW DATE : 12-30-13
CHECKED BY : S. A. DENNEY DATE : 12-31-13

SITE 4

cmayhew 5/3/2016 9:37:05 AM
Filename: Y:\Projects\NCDOT\U-3308\Structures\Dwgs\Final\404_016_U3308_SMU_F01.dgn

DocuSign Envelope ID: 34E2C66B-7797-4AB6-9BD3-31F0D6E698EB

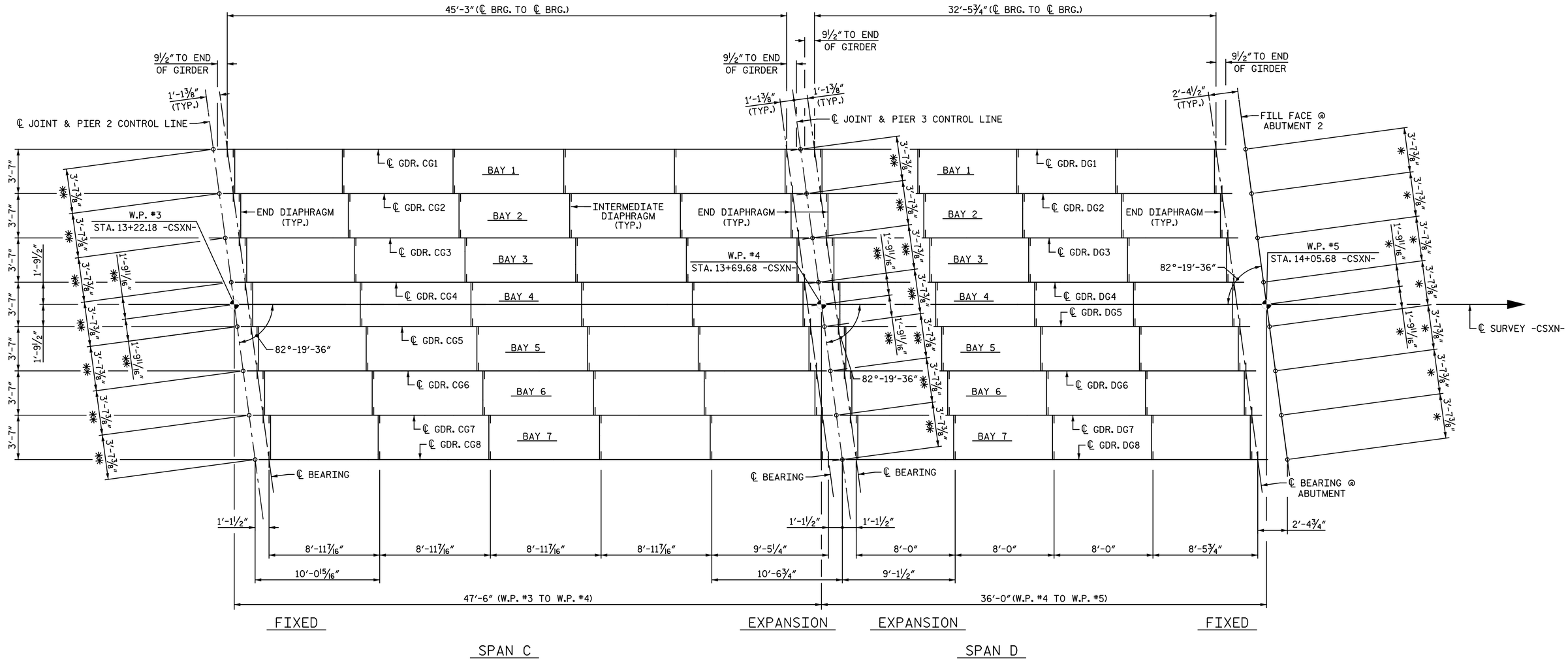

FRAMING PLAN

* MEASURED ALONG FILL FACE @ ABUTMENT

** MEASURED ALONG ℄ JOINT & ℄ PIER

PROJECT NO. U-3308

DURHAM COUNTY

STATION: 24+55.20 -LALT-
13+22.18 -CSXN-

SHEET 2 OF 2

NORTH CAROLINA PROFESSIONAL SEAL 25911 ENGINEER DWAIN G. HATHAWAY

DocuSigned by: Dwain Hathaway
283786071DA0460...

5/3/2016

STATE OF NORTH CAROLINA
DEPARTMENT OF TRANSPORTATION
RALEIGH

SUPERSTRUCTURE

GIRDER LAYOUT

SPANS C & D

Michael Baker INTERNATIONAL

Michael Baker Engineering
8000 Regency Parkway, Suite 600
Cary, North Carolina 27518
NC License No.: F-1084

REVISIONS						SHEET NO.
NO.	BY:	DATE:	NO.	BY:	DATE:	S4-17
1			3			TOTAL SHEETS
2			4			68

DRAWN BY : M. D. MAYHEW DATE : 1-7-14
CHECKED BY : S. A. DENNEY DATE : 2-27-14

SITE 4

cmayhew 5/3/2016 9:37:06 AM
Filename: Y:\Projects\NCDOT\U-3308\Structures\Dwgs\Final\404_017_U3308_SMU_F02.dgn

DocuSign Envelope ID: 34E2C66B-7797-4AB6-9BD3-31F0D6E698EB

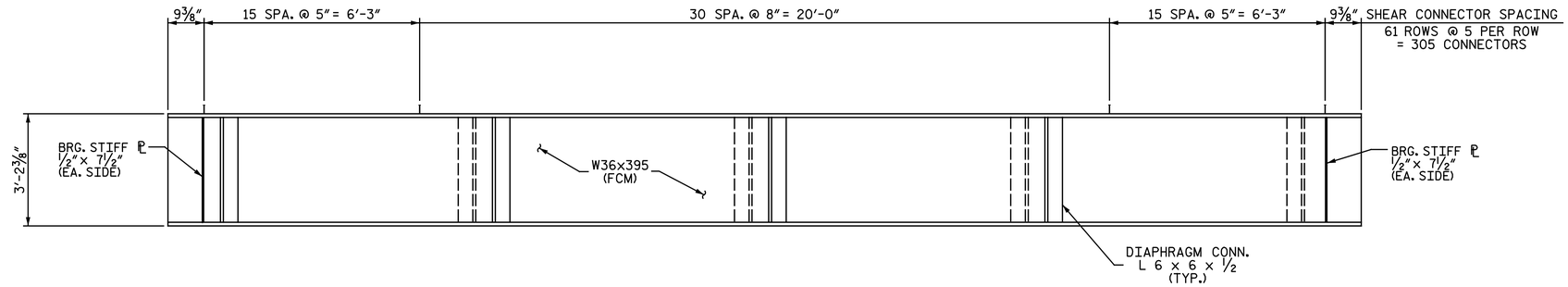

GIRDER ELEVATION - SPAN A

(INTERIOR GIRDER SHOWN, OTHERS SIMILAR)

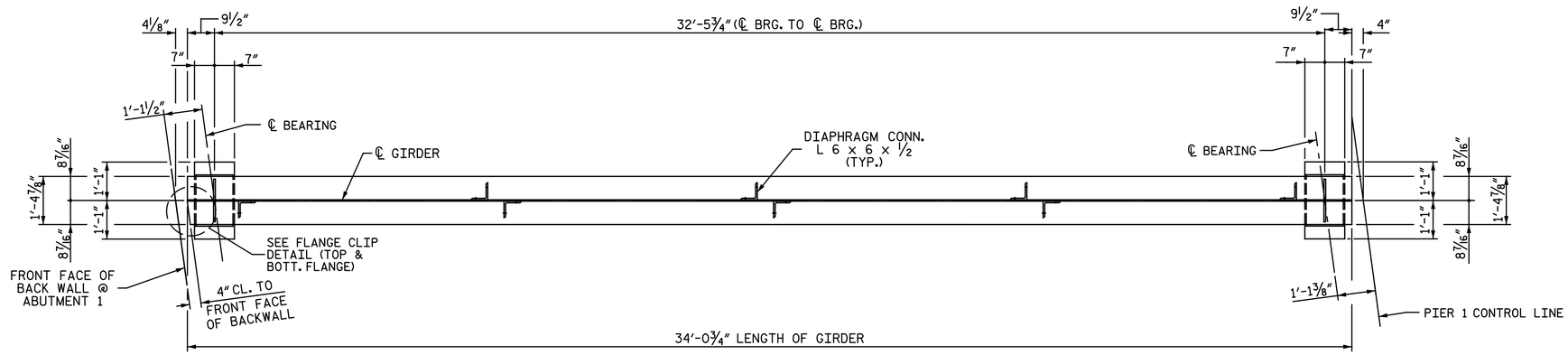

BOTTOM FLANGE DETAIL - SPAN A

(INTERIOR GIRDER SHOWN, OTHERS SIMILAR)
DIAPHRAGM CONNECTORS SHALL NOT BE PLACED ON
OUTSIDE OF EXTERIOR GIRDERS.

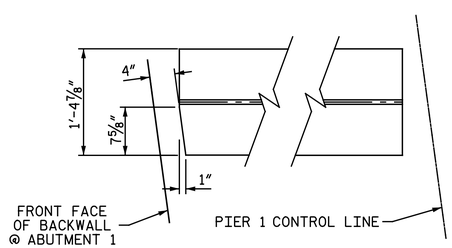

FLANGE CLIP DETAIL - SPAN A

NOTE: CLIP TOP & BOTTOM FLANGES AT EACH END OF GIRDER.

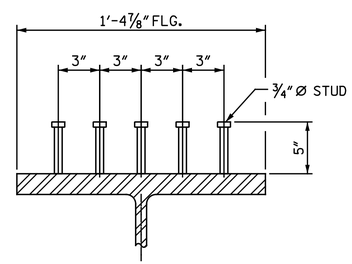

SHEAR STUD DETAIL

PROJECT NO. U-3308
DURHAM COUNTY
STATION: 24+55.20 -LALT-
13+22.18 -CSXN-
SHEET 1 OF 4

STATE OF NORTH CAROLINA
DEPARTMENT OF TRANSPORTATION
RALEIGH

SUPERSTRUCTURE

GIRDER DETAILS
SPAN A

NORTH CAROLINA PROFESSIONAL SEAL 25911 ENGINEER DWAIN G. HATHAWAY

DocuSigned by: Dwain Hathaway
2837B0071DA0460...
5/3/2016

Michael Baker INTERNATIONAL
Michael Baker Engineering
8000 Regency Parkway, Suite 600
Cary, North Carolina 276518
NC License No.: F-1084

REVISIONS						SHEET NO.
NO.	BY:	DATE:	NO.	BY:	DATE:	S4-18
1			3			TOTAL SHEETS
2			4			68

DRAWN BY : C. E. MAYHEW DATE : 3-13-13
CHECKED BY : S. A. DENNEY DATE : 2-27-14

cmayhew
5/3/2016 9:37:06 AM
Filename: Y:\Projects\NCDOT\U-3308\Structures\Dwgs\Final\404_018_U3308_SMU_G01.dgn

SITE 4

DocuSign Envelope ID: 34E2C66B-7797-4AB6-9BD3-31F0D6E698EB

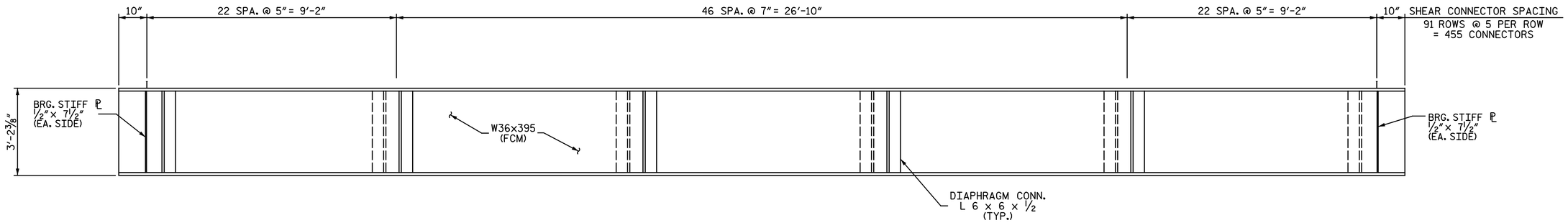

GIRDER ELEVATION - SPAN B

(INTERIOR GIRDER SHOWN, OTHERS SIMILAR)

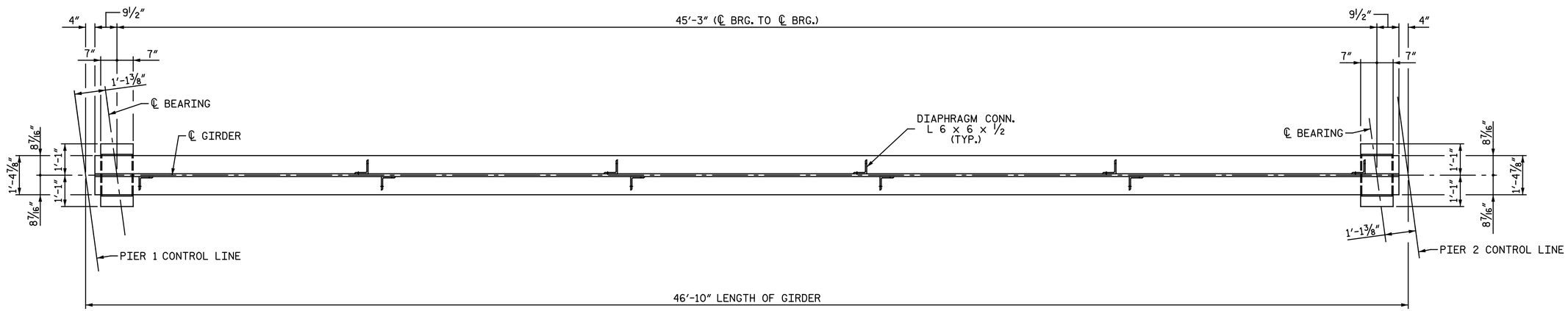

BOTTOM FLANGE DETAIL - SPAN B

(INTERIOR GIRDER SHOWN, OTHERS SIMILAR)
DIAPHRAGM CONNECTORS SHALL NOT BE PLACED ON
OUTSIDE OF EXTERIOR GIRDERS.

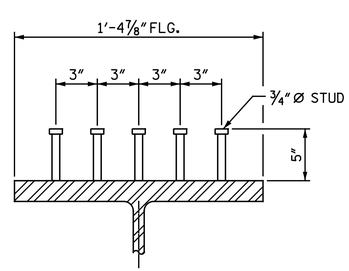

SHEAR STUD DETAIL

PROJECT NO. U-3308
DURHAM COUNTY
STATION: 24+55.20 -LALT-
13+22.18 -CSXN-
SHEET 2 OF 4

NORTH CAROLINA PROFESSIONAL SEAL 25911 ENGINEER DWAIN C. HATHAWAY

Docusigned by: Dwain Hathaway
2837B0071DA0460...
5/3/2016

Michael Baker INTERNATIONAL
Michael Baker Engineering
8000 Regency Parkway, Suite 600
Cary, North Carolina 27518
NC License No.: F-1084

STATE OF NORTH CAROLINA
DEPARTMENT OF TRANSPORTATION
RALEIGH
SUPERSTRUCTURE

GIRDER DETAILS
SPAN B

REVISIONS								
NO.	BY:	DATE:	NO.	BY:	DATE:		SHEET NO.	
1			3				S4-19	
2			4				TOTAL SHEETS	
							68	

DRAWN BY : C. E. MAYHEW DATE : 3-13-13
CHECKED BY : S. A. DENNEY DATE : 2-27-14

cmayhew
5/3/2016 9:37:07 AM
Filename: Y:\Projects\NCDOT\U-3308\Structures\Dwgs\Final\404_019_U3308_SMU_G02.dgn

SITE 4

DocuSign Envelope ID: 34E2C66B-7797-4AB6-9BD3-31F0D6E698EB

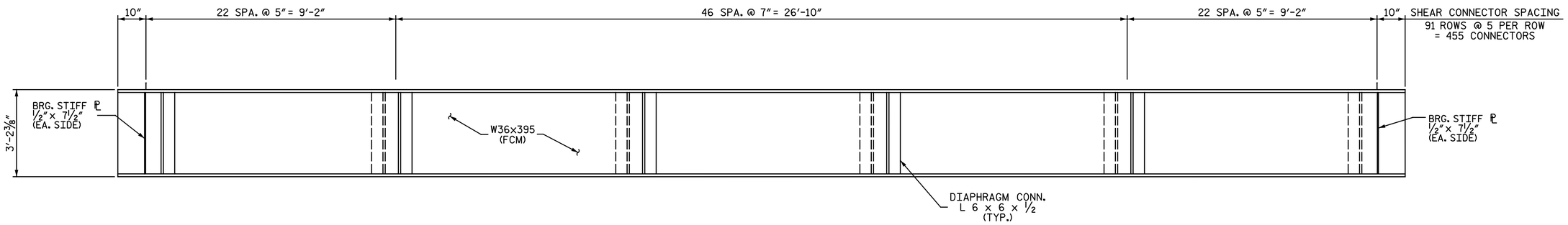

GIRDER ELEVATION - SPAN C

(INTERIOR GIRDER SHOWN, OTHERS SIMILAR)

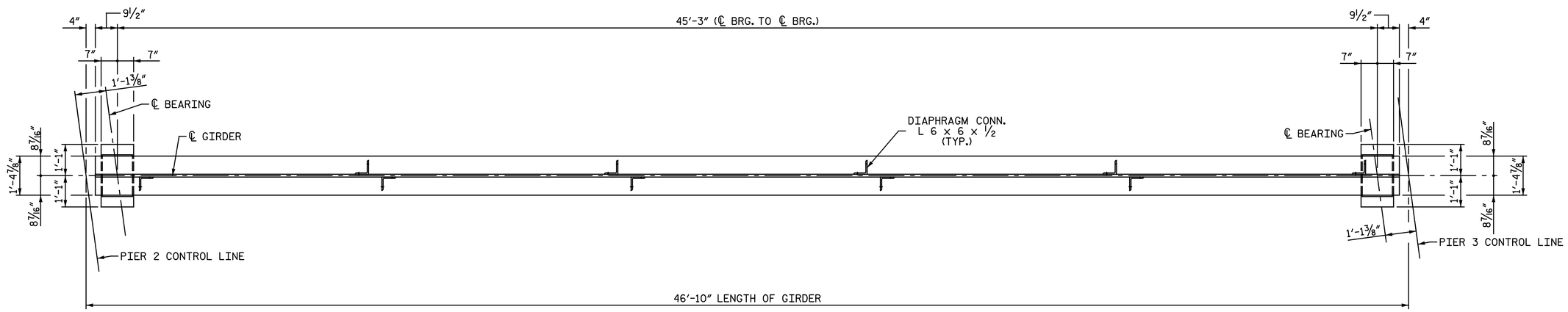

BOTTOM FLANGE DETAIL - SPAN C

(INTERIOR GIRDER SHOWN, OTHERS SIMILAR)
DIAPHRAGM CONNECTORS SHALL NOT BE PLACED ON
OUTSIDE OF EXTERIOR GIRDERS.

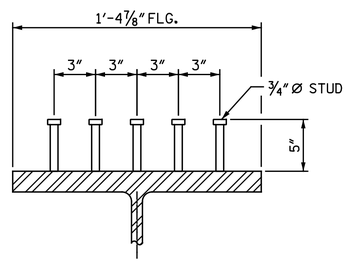

SHEAR STUD DETAIL

PROJECT NO. U-3308
DURHAM COUNTY
STATION: 24+55.20 -LALT-
13+22.18 -CSXN-
SHEET 3 OF 4

NORTH CAROLINA PROFESSIONAL SEAL 25911 ENGINEER DWAIN G. HATHAWAY

DocuSigned by: Dwain Hathaway
5/3/2016

STATE OF NORTH CAROLINA
DEPARTMENT OF TRANSPORTATION
RALEIGH
SUPERSTRUCTURE

GIRDER DETAILS
SPAN C

Michael Baker INTERNATIONAL
Michael Baker Engineering
8000 Regency Parkway, Suite 600
Cary, North Carolina 276518
NC License No.: F-1084

REVISIONS						SHEET NO.
NO.	BY:	DATE:	NO.	BY:	DATE:	S4-20
1			3			TOTAL SHEETS
2			4			68

DRAWN BY : M. D. MAYHEW DATE : 3-7-14
CHECKED BY : S. A. DENNEY DATE : 3-14-14

cmayhew 9:37:07 AM
5/3/2016
Filename: Y:\Projects\NCDOT\U-3308\Structures\Dwgs\Final\404_020_U3308_SMU_G03.dgn

SITE 4

DocuSign Envelope ID: 34E2C66B-7797-4AB6-9BD3-31F0D6E698EB

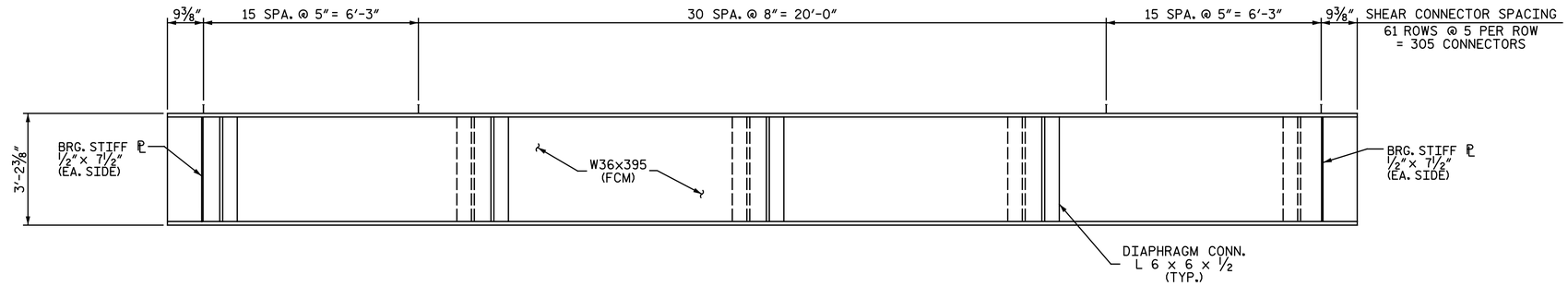

GIRDER ELEVATION - SPAN D

(INTERIOR GIRDER SHOWN, OTHERS SIMILAR)

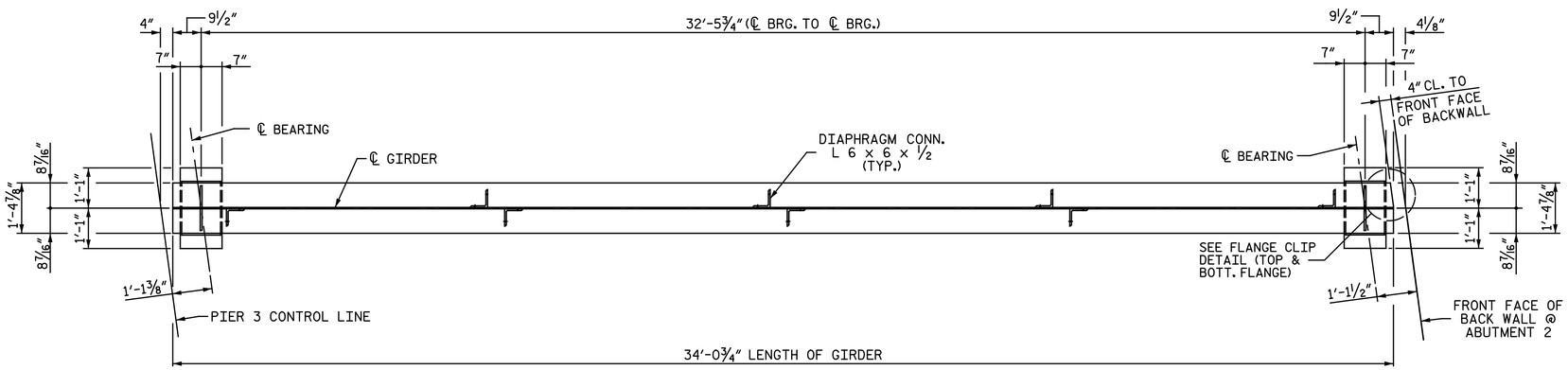

BOTTOM FLANGE DETAIL - SPAN D

(INTERIOR GIRDER SHOWN, OTHERS SIMILAR)
DIAPHRAGM CONNECTORS SHALL NOT BE PLACED ON
OUTSIDE OF EXTERIOR GIRDERS.

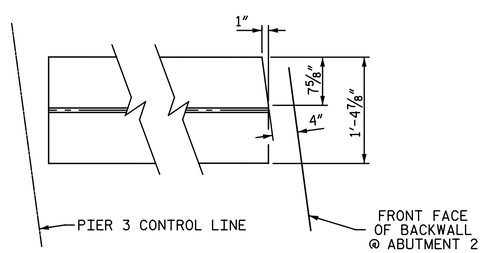

FLANGE CLIP DETAIL - SPAN D

NOTE: CLIP TOP & BOTTOM FLANGES AT EACH END OF GIRDER.

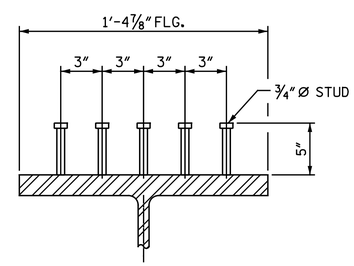

SHEAR STUD DETAIL

PROJECT NO. U-3308
DURHAM COUNTY
STATION: 24+55.20 -LALT-
13+22.18 -CSXN-
SHEET 4 OF 4

NORTH CAROLINA PROFESSIONAL SEAL 25911 ENGINEER DWAIN G. HATHAWAY

DocuSigned by: Dwain Hathaway
2837B0071DA0460...
5/3/2016

STATE OF NORTH CAROLINA
DEPARTMENT OF TRANSPORTATION
RALEIGH

SUPERSTRUCTURE

GIRDER DETAILS
SPAN D

Michael Baker INTERNATIONAL
Michael Baker Engineering
8000 Regency Parkway, Suite 600
Cary, North Carolina 276518
NC License No.: F-1084

REVISIONS						
NO.	BY:	DATE:	NO.	BY:	DATE:	
1			3			
2			4			

SHEET NO. S4-21
TOTAL SHEETS 68

DRAWN BY : C. E. MAYHEW DATE : 3-13-13
CHECKED BY : S. A. DENNEY DATE : 3-14-14

cmayhew
5/3/2016 9:37:08 AM
Filename: Y:\Projects\NCDOT\U-3308\Structures\Dwgs\Final\404_021_U3308_SMU_G04.dgn

SITE 4

DocuSign Envelope ID: 34E2C66B-7797-4AB6-9BD3-31F0D6E698EB

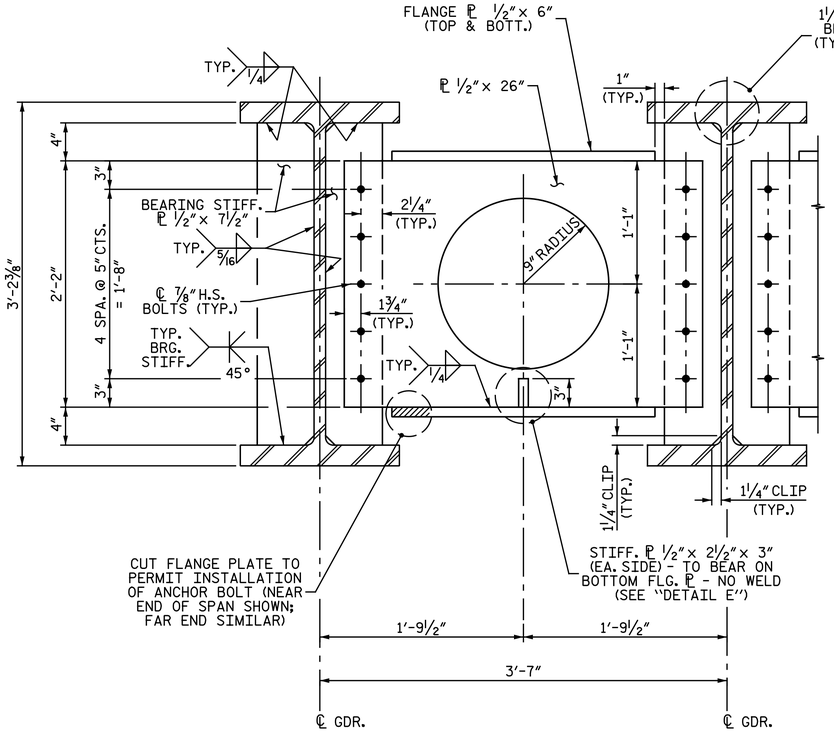

SECTION AT END DIAPHRAGM

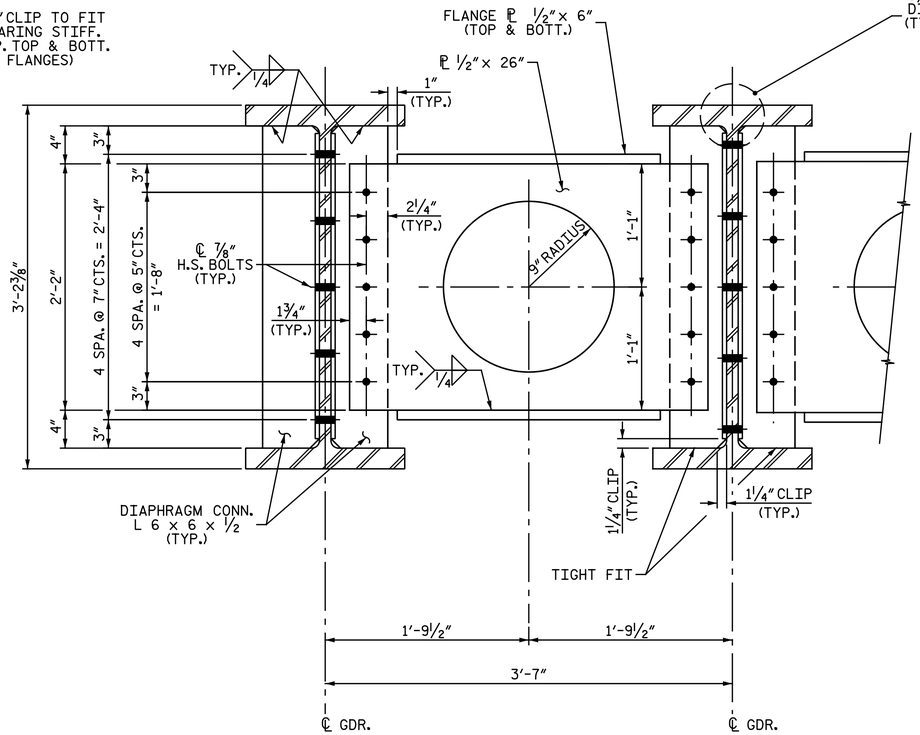

SECTION AT INTERMEDIATE DIAPHRAGM

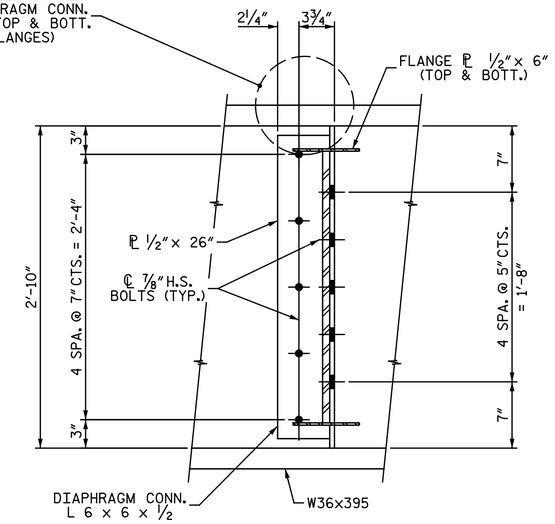

ELEVATION
L6 × 6 × ½

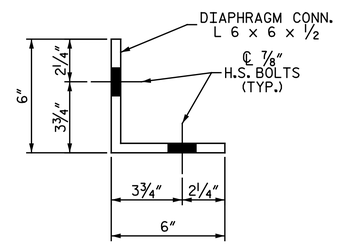

PLAN
L6 × 6 × ½

DIAPHRAGM CONNECTOR DETAILS

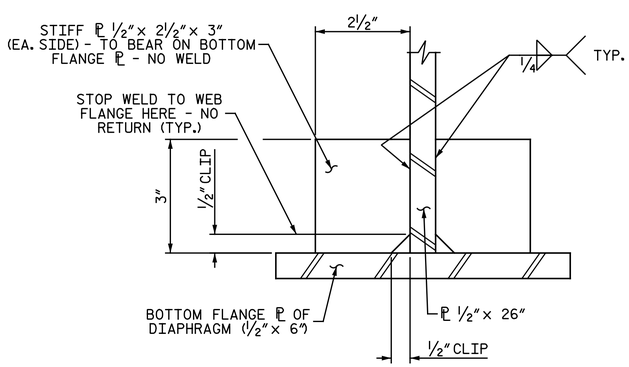

DETAIL E

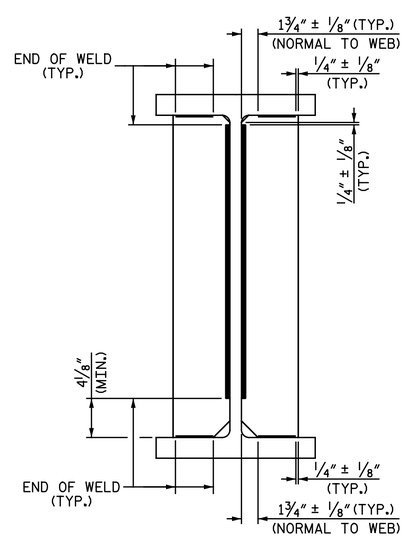

WELD TERMINATION DETAILS
(FILLET WELDS ONLY)

PROJECT NO. U-3308
DURHAM COUNTY
STATION: 24+55.20 -LALT-
13+22.18 -CSXN-

NORTH CAROLINA PROFESSIONAL SEAL 25911 ENGINEER DUWAIN G. HATHAWAY

Duwain Hathaway
5/3/2016

Michael Baker INTERNATIONAL
Michael Baker Engineering
8000 Regency Parkway, Suite 600
Cary, North Carolina 276518
NC License No.: F-1084

STATE OF NORTH CAROLINA
DEPARTMENT OF TRANSPORTATION
RALEIGH
SUPERSTRUCTURE

STRUCTURAL STEEL DIAPHRAGM DETAILS

REVISIONS							
NO.	BY:	DATE:	NO.	BY:	DATE:		
1			3				
2			4				

SHEET NO. S4-22
TOTAL SHEETS 68

DRAWN BY : M. D. MAYHEW DATE : 12-18-13
CHECKED BY : S. A. DENNEY DATE : 12-31-13

cmayhew 5/3/2016 9:37:09 AM
Filename: Y:\Projects\NCDOT\U-3308\Structures\Dwgs\Final\404_022_U3308_SMU_DD.dgn

SITE 4

DocuSign Envelope ID: 34E2C66B-7797-4AB6-9BD3-31F0D6E698EB

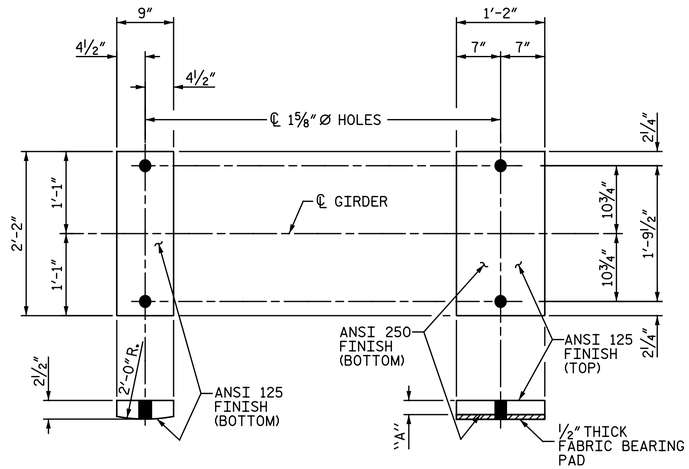

SOLE PLATE MASONRY PLATE

BEARINGS - FIXED END

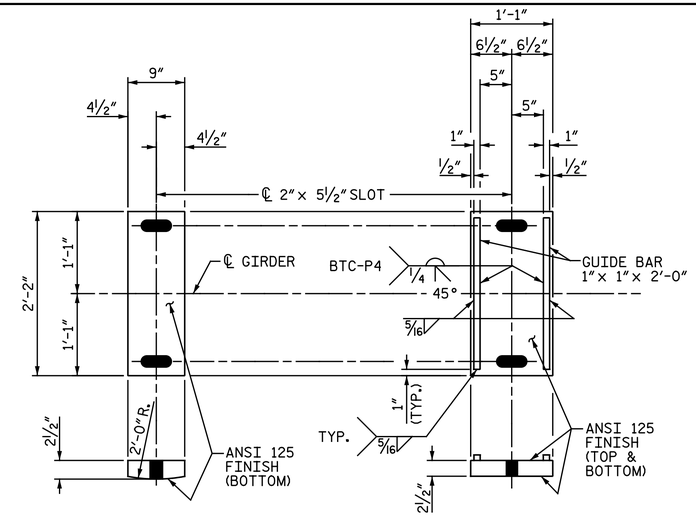

SOLE PLATE SLIDING PLATE

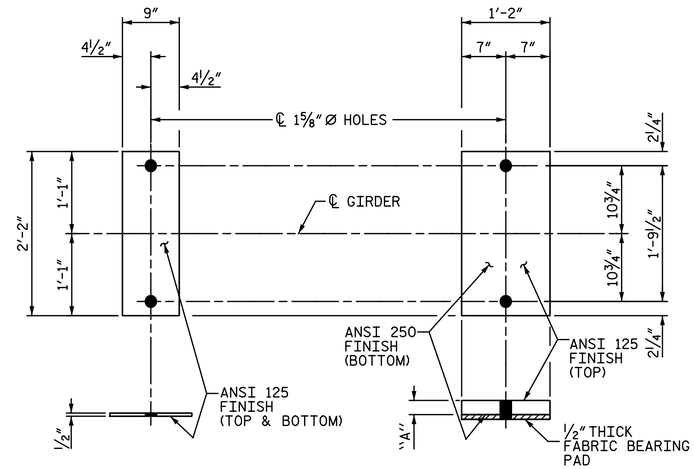

BRONZE PLATE MASONRY PLATE

BEARINGS - EXPANSION END

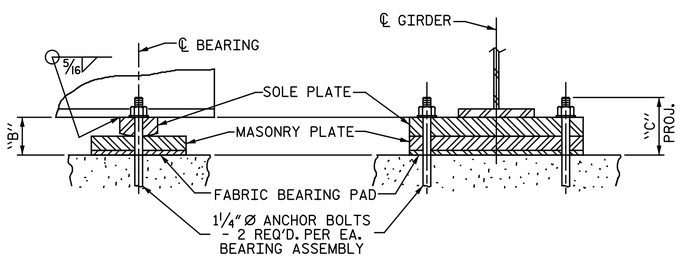

BEARING ASSEMBLY - FIXED END

(32 REQ'D)

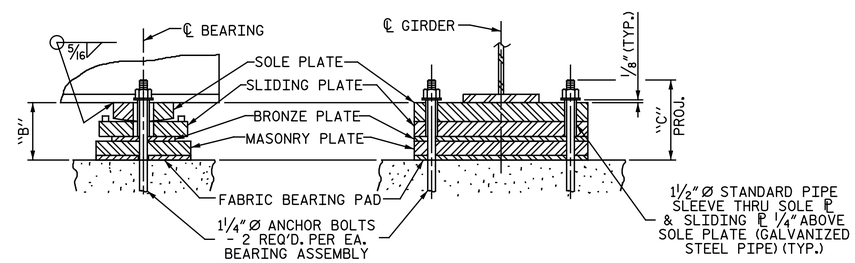

BEARING ASSEMBLY - EXPANSION END

(32 REQ'D)

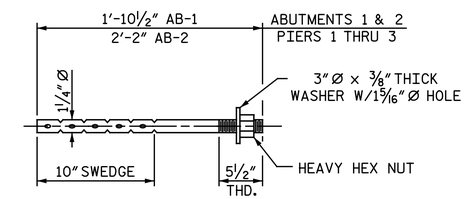

DETAIL OF ANCHOR BOLTS

NOTE: ANCHOR BOLTS SHALL HAVE 1'-3" MIN. EMBEDMENT

NOTES:

AT ALL FIXED POINTS OF SUPPORT, NUTS FOR ANCHOR BOLTS ARE TO BE TIGHTENED FINGER TIGHT AND GIVEN AN ADDITIONAL ¼ TURN. THE THREAD OF THE NUT AND BOLT SHALL BE BURRED WITH A SHARP POINTED TOOL.

BEARING PADS SHALL BE PREFORMED FABRIC BEARING PADS, ½" THICK AND SHALL BE EITHER SHOCK PAD STYLE 15175, AS MANUFACTURED BY THE ALERT MANUFACTURING AND SUPPLY COMPANY, CHICAGO, IL; OR FABREEKA PADS AS MANUFACTURED BY FABREEKA PRODUCTS COMPANY, BOSTON, MA. OR SORBTEX PADS AS MANUFACTURED BY VOSS ENGINEERING, INC. CHICAGO, IL OR AN APPROVED EQUAL.

ALL BEARING PLATES AND PIPE SLEEVES ARE TO BE GALVANIZED. SEE STD. SPEC. 1072-13.

AT THE CONTRACTOR'S OPTION, A FILL PLATE MAY BE USED IN COMBINATION WITH MASONRY PLATE TO OBTAIN REQUIRED PLATE THICKNESS SHOWN IN TABLE. IF A FILL PLATE IS USED, MINIMUM MASONRY PLATE THICKNESS SHALL BE 2¼". MINIMUM FILL PLATE THICKNESS SHALL BE 1¼". FILL PLATES SHALL HAVE THE SAME LENGTH, WIDTH AND HOLE PATTERN AS THE MASONRY PLATE.

MASONRY PLATE SCHEDULE (DIMENSIONS IN INCHES)

	FIXED END @ ABUTMENT 1			EXPANSION END @ PIERS			FIXED END @ PIERS			FIXED END @ ABUTMENT 2		
GIRDER	"A"	"B"	"C"	"A"	"B"	"C"	"A"	"B"	"C"	"A"	"B"	"C"
1	2¼"	5¼"	7½"	2¼"	8¼"	11"	5¼"	8¼"	11"	2¼"	5¼"	7½"
2	2¼"	5¼"	7½"	2¼"	8¼"	11"	5¼"	8¼"	11"	2¼"	5¼"	7½"
3	2¼"	5¼"	7½"	2¼"	8¼"	11"	5¼"	8¼"	11"	2¼"	5¼"	7½"
4	2¼"	5¼"	7½"	2¼"	8¼"	11"	5¼"	8¼"	11"	2¼"	5¼"	7½"
5	2¼"	5¼"	7½"	2¼"	8¼"	11"	5¼"	8¼"	11"	2¼"	5¼"	7½"
6	2¼"	5¼"	7½"	2¼"	8¼"	11"	5¼"	8¼"	11"	2¼"	5¼"	7½"
7	2¼"	5¼"	7½"	2¼"	8¼"	11"	5¼"	8¼"	11"	2¼"	5¼"	7½"
8	2¼"	5¼"	7½"	2¼"	8¼"	11"	5¼"	8¼"	11"	2¼"	5¼"	7½"

PROJECT NO. U-3308
DURHAM COUNTY
STATION: 24+55.20 -LALT-
13+22.18 -CSXN-

NORTH CAROLINA PROFESSIONAL SEAL 25911 ENGINEER DWAIN G. HATHAWAY

DocuSigned by: Dwain Hathaway
2837B0071DA0460...
5/3/2016

Michael Baker INTERNATIONAL
Michael Baker Engineering
8000 Regency Parkway, Suite 600
Cary, North Carolina 27518
NC License No.: F-1084

STATE OF NORTH CAROLINA
DEPARTMENT OF TRANSPORTATION
RALEIGH
SUPERSTRUCTURE
BEARING DETAILS

REVISIONS								SHEET NO.
NO.	BY:	DATE:	NO.	BY:	DATE:			S4-23
1			3					TOTAL SHEETS
2			4					68

DRAWN BY : M. D. MAYHEW DATE : 1-7-14
CHECKED BY : S. A. DENNEY DATE : 3-3-14

amayhew 5/3/2016 9:37:09 AM
Filename: Y:\Projects\NCDOT\U-3308\Structures\Dwgs\Final\404_023_U3308_SMU_BD.dgn

SITE 4

DocuSign Envelope ID: 34E2C66B-7797-4AB6-9BD3-31F0D6E698EB

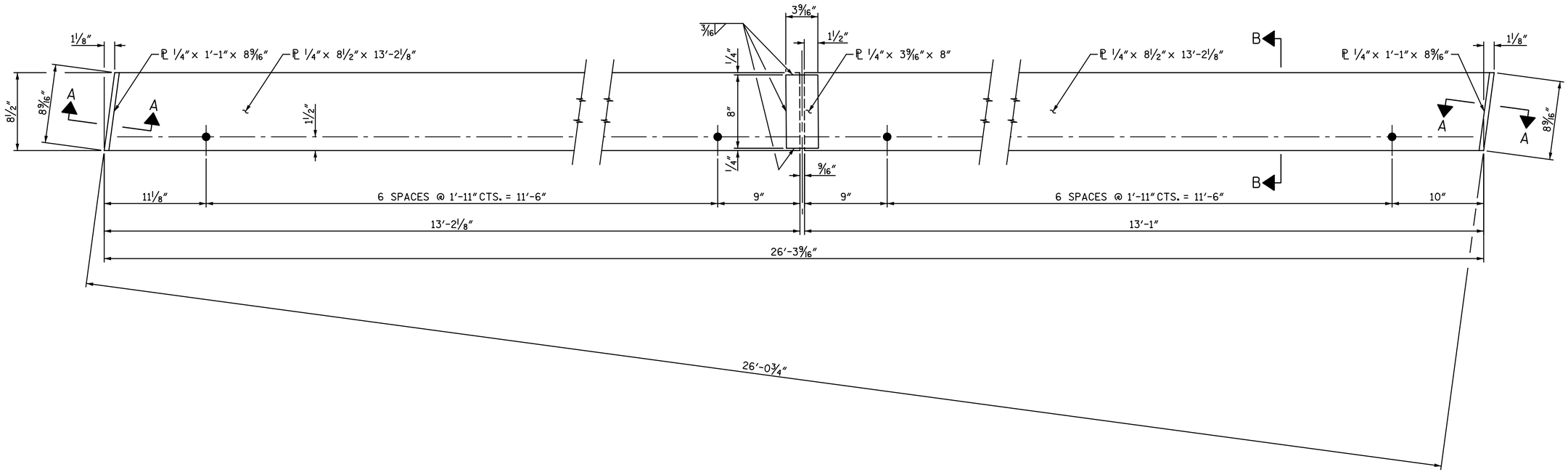

EXPANSION PLATE PLAN

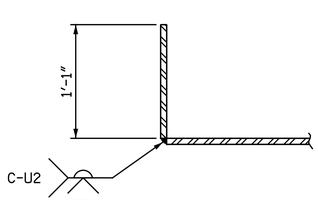

SECTION A-A

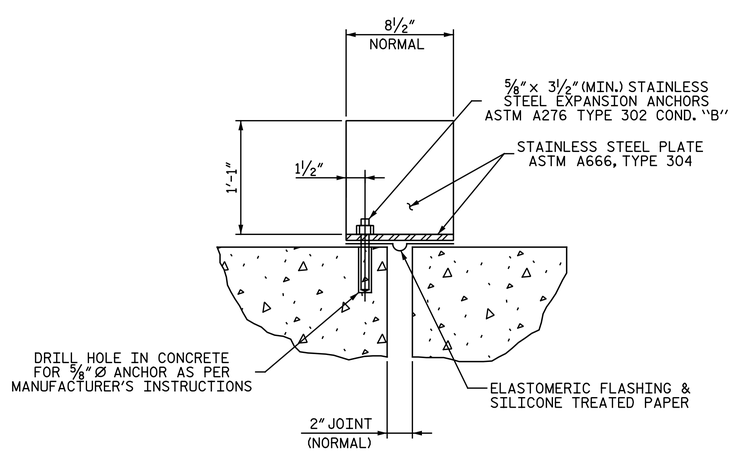

SECTION B-B

PROJECT NO. U-3308

DURHAM COUNTY

STATION: 24+55.20 -LALT-
13+22.18 -CSXN-

NORTH CAROLINA PROFESSIONAL SEAL 25911 ENGINEER DWAIN C. HATHAWAY

Docusigned by: Dwain Hathaway 2837B6D71DAD460...

5/3/2016

Michael Baker INTERNATIONAL

Michael Baker Engineering
8000 Regency Parkway, Suite 600
Cary, North Carolina 27518
NC License No.: F-1084

STATE OF NORTH CAROLINA
DEPARTMENT OF TRANSPORTATION
RALEIGH

EXPANSION PLATE DETAILS

REVISIONS						
NO.	BY:	DATE:	NO.	BY:	DATE:	
1			3			
2			4			

SHEET NO. S4-24

TOTAL SHEETS 68

SITE 4

DRAWN BY : M. D. MAYHEW DATE : 1-7-14
CHECKED BY : S. A. DENNEY DATE : 3-4-14

mayhew
5/3/2016 9:37:10 AM
Filename: Y:\Projects\NCDOT\U-3308\Structures\Dwgs\Final\404_024_U3308_SMU_XPD.dgn

DocuSign Envelope ID: 34E2C66B-7797-4AB6-9BD3-31F0D6E698EB

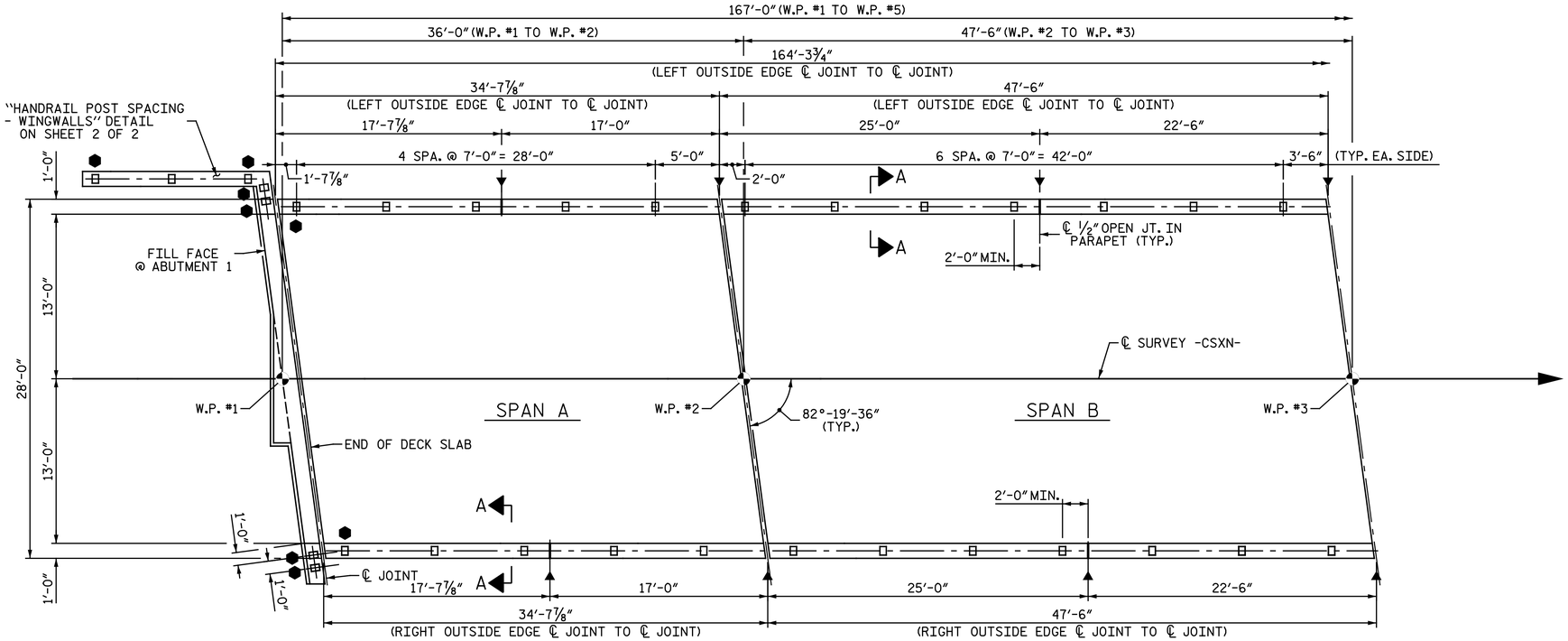

HANDRAIL POST SPACING - SPANS A & B

RAIL NOT SHOWN FOR CLARITY

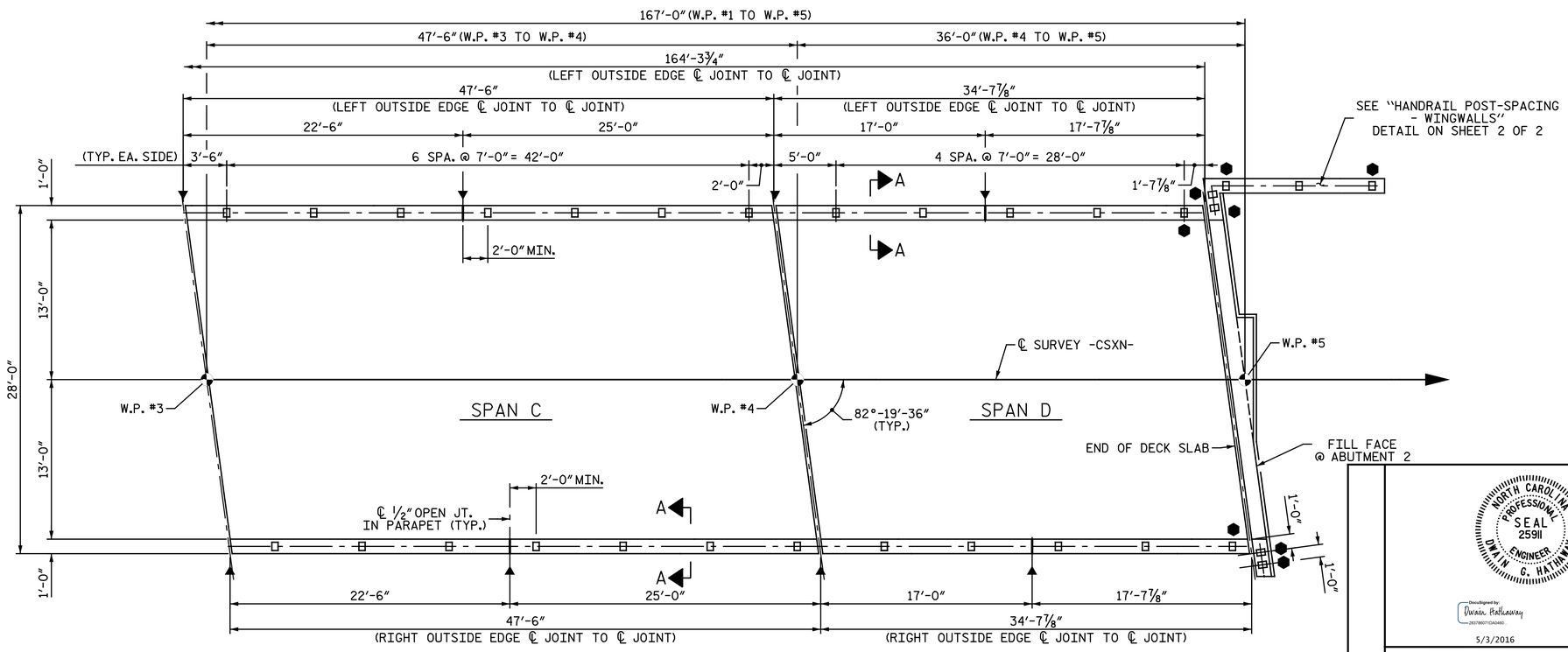

HANDRAIL POST SPACING - SPANS C & D

RAIL NOT SHOWN FOR CLARITY

NOTES:

FOR DETAILS AND NOTES, SEE "HANDRAIL DETAILS" SHEET 2 OF 2.

FOR "SECTION A-A", SEE "HANDRAIL DETAILS" SHEET 2 OF 2.

⬢ INDICATES END POST REQUIRED AT THIS LOCATION. SEE "END POST DETAIL" ON SHEET 2 OF 2.

▼ INDICATES RAIL EXPANSION JOINT (SPLICE GAP). SEE "RAIL EXPANSION JOINT DETAIL" ON SHEET 2 OF 2.

PROJECT NO. U-3308

DURHAM COUNTY

STATION: 24+55.20 -LALT-
13+22.18 -CSXN-

SHEET 1 OF 2

NORTH CAROLINA PROFESSIONAL SEAL 25911 ENGINEER DWAIN G. HATHAWAY

DocuSigned by: Dwain Hathaway 283786071DA0460...

5/3/2016

Michael Baker INTERNATIONAL

Michael Baker Engineering
8000 Regency Parkway, Suite 600
Cary, North Carolina 276518
NC License No.: F-1084

STATE OF NORTH CAROLINA
DEPARTMENT OF TRANSPORTATION
RALEIGH

HANDRAIL AND POST SPACING

REVISIONS							
NO.	BY:	DATE:	NO.	BY:	DATE:	SHEET NO.	S4-25
1			3			TOTAL SHEETS	68
2			4				

DRAWN BY : M. D. MAYHEW DATE : 1-2-14
CHECKED BY : S. A. DENNEY DATE : 2-25-14

cmayhew 5/3/2016 9:37:10 AM
Filename: Y:\Projects\NCDOT\U-3308\Structures\Dwgs\Final\404_025_U3308_SMU_RL01.dgn

SITE 4

DocuSign Envelope ID: 34E2C66B-7797-4AB6-9BD3-31F0D6E698EB

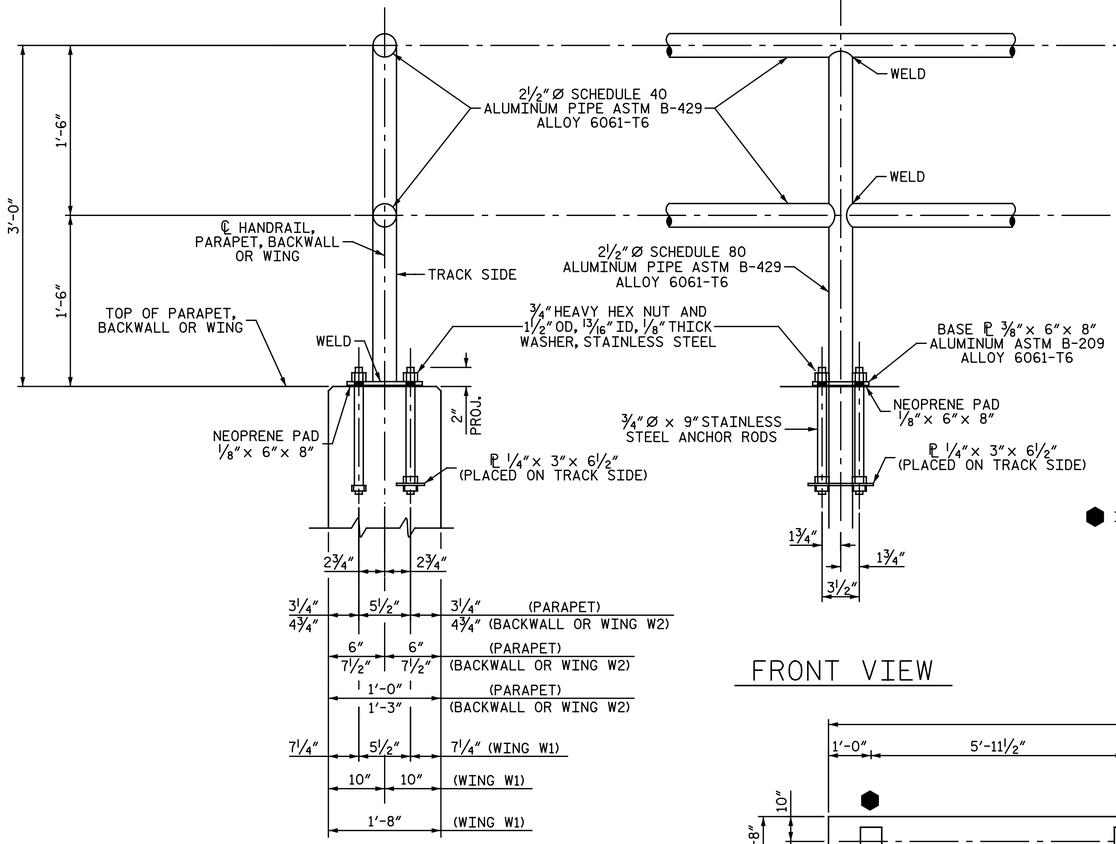

SECTION A-A

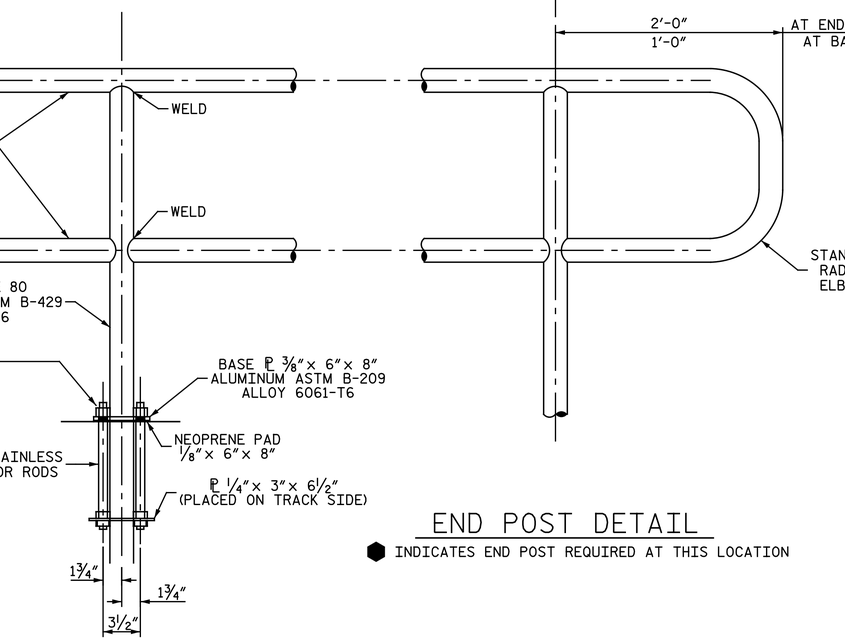

FRONT VIEW

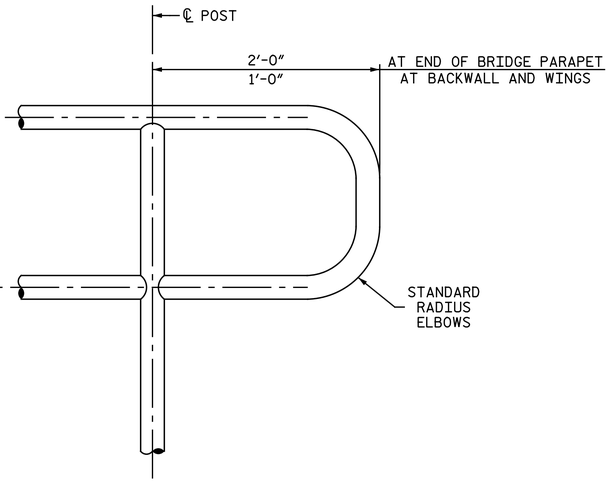

END POST DETAIL

⬢ INDICATES END POST REQUIRED AT THIS LOCATION

NOTES:

JOINTS IN RAILING (SPLICE GAP) SHALL BE LOCATED AS SHOWN IN HANDRAIL AND POST SPACING PLAN.

ALUMINUM PIPE TO BE ASTM B-429, ALLOY 6061-T6 AND BASE PLATE TO BE ASTM B-209, ALLOY 6061-T6.

STAINLESS STEEL BOLTS, CAP SCREWS, AND NUTS TO BE ASTM A-276 TYPE 304. STAINLESS STEEL WASHERS TO BE ASTM A-276 TYPE 302.

POSTS TO BE SET PERPENDICULAR TO TOP OF PARAPET AND RAILS SHALL BE PLACED PARALLEL TO THE GRADE OF THE BRIDGE.

CERTIFIED MILL REPORTS ARE REQUIRED FOR RAIL AND POSTS. SHOP INSPECTIONS ARE NOT REQUIRED.

AFTER ANCHOR ROD NUTS HAVE BEEN TIGHTENED, THREADS SHALL BE NICKED TO LOCK NUTS.

CURVED RAIL USAGE: WHERE RAILS ARE TO BE USED ON BRIDGES ON HORIZONTAL AND/OR VERTICAL CURVATURE THE CONTRACTOR MAY AT HIS OPTION HAVE THE REQUIRED CURVATURE IN THE RAIL FORMED IN THE SHOP OR IN THE FIELD. IN EITHER EVENT THE RAIL SHALL CONFORM WITHOUT BUCKLING OR KINKING TO THE REQUIRED CURVATURE IN A UNIFORM MANNER ACCEPTABLE TO THE ENGINEER.

ANCHOR PLATES SHALL BE STEEL CONFORMING TO ASTM SPECIFICATION A36.

ANCHOR RODS SHALL CONFORM TO ASTM SPECIFICATION A276 TYPE 302 OR 304, STAINLESS STEEL AND THREADS SHALL BE ROLLED, NOT CUT.

UPPER ANCHOR ROD NUTS SHALL BE HEAVY HEX NUTS, PER ASTM A276 TYPE 302 OR 304 STAINLESS STEEL.

LOWER ANCHOR ROD NUTS SHALL BE HEAVY HEX STEEL NUTS, PER ASTM A563.

THE CENTERLINE OF ANY SPLICE AND/OR EXPANSION JOINT IS TO BE LOCATED AT LEAST 2'-0" AWAY FROM CENTERLINE OF POST. EXPANSION AND/OR SPLICE JOINTS FOR EACH RAIL OF TWO RAILINGS ARE TO BE PLACED IN THE SAME LOCATION AND IN THE SAME PANEL.

WELDING SHALL BE IN ACCORDANCE WITH THE CURRENT AWS STRUCTURAL WELDING CODE - ALUMINUM.

THE LENGTH OF METAL RAIL TO BE PAID FOR SHALL BE THE CONTINUOUS LENGTH MEASURED FROM END TO END OF RAIL, ALONG THE TOP RAIL.

SHOP DRAWINGS SHALL BE REQUIRED.

FOR METAL HANDRAIL, SEE SPECIAL PROVISIONS.

LENGTH = 369.80 LIN. FT.

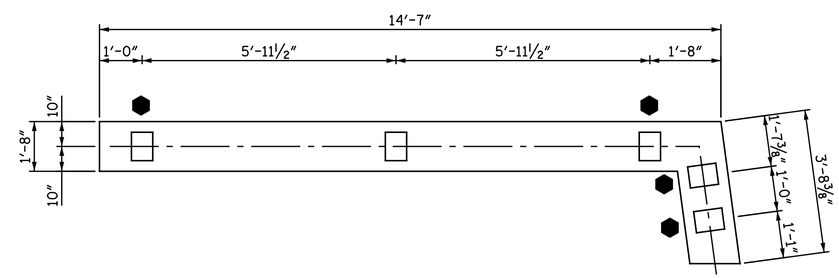

HANDRAIL DETAIL WING W1

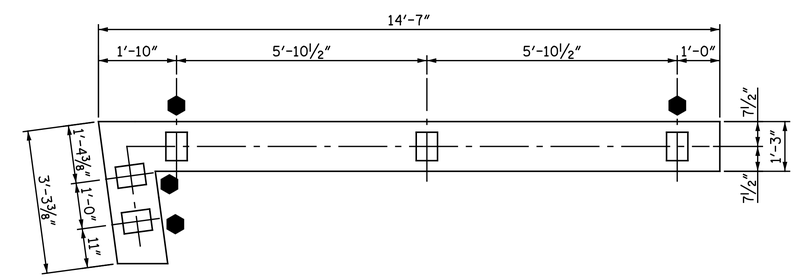

HANDRAIL DETAIL WING W2

HANDRAIL POST SPACING - WINGWALLS

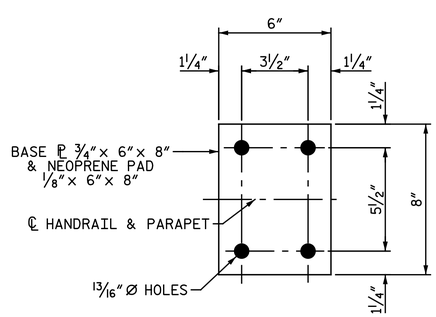

BASE PLATE & NEOPRENE PAD DETAIL

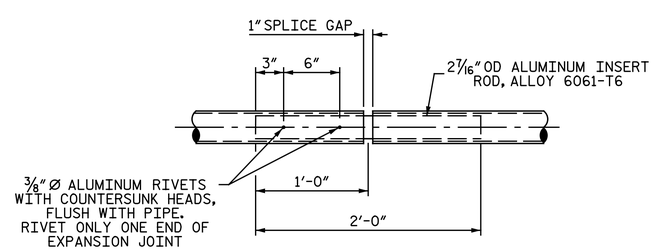

RAIL EXPANSION JOINT DETAIL

(TYPICAL 14 PLACES)

PROJECT NO. U-3308

DURHAM COUNTY

STATION: 24+55.20 -LALT-
13+22.18 -CSXN-

SHEET 2 OF 2

NORTH CAROLINA PROFESSIONAL SEAL 25911 ENGINEER DWAIN G. HATHAWAY

DocuSigned by: Dwain Hathaway 283786071DA0460...

5/3/2016

STATE OF NORTH CAROLINA
DEPARTMENT OF TRANSPORTATION
RALEIGH

HANDRAIL DETAILS

Michael Baker INTERNATIONAL

Michael Baker Engineering
8000 Regency Parkway, Suite 600
Cary, North Carolina 276518
NC License No.: F-1084

REVISIONS								SHEET NO.
NO.	BY:	DATE:	NO.	BY:	DATE:			S4-26
1			3					TOTAL SHEETS
2			4					68

DRAWN BY : M. D. MAYHEW DATE : 1-8-14
CHECKED BY : S. A. DENNEY DATE : 3-3-14

cmayhew
5/3/2016 9:37:11 AM
Filename: Y:\Projects\NCDOT\U-3308\Structures\Dwgs\Final\404_026_U3308_SMU_RL02.dgn

SITE 4

DocuSign Envelope ID: 34E2C66B-7797-4AB6-9BD3-31F0D6E698EB

REINFORCING STEEL SCHEDULE

SPAN A

BAR	NO.	SIZE	TYPE	LENGTH	WEIGHT
A1	106	6	STR	27′ - 8″	4,405
A2	4	6	STR	23′ - 8″	142
A3	4	6	STR	19′ - 4″	116
A4	4	6	STR	15′ - 0″	90
A5	4	6	STR	10′ - 8″	64
A6	4	6	STR	6′ - 4″	38
A7	4	6	STR	2′ - 7″	16
A8	8	6	STR	27′ - 11″	335
B1	138	4	STR	18′ - 1″	1,667
B3	12	5	STR	17′ - 1″	214
B4	12	5	STR	16′ - 7″	208
S1	68	5	1	8′ - 3″	585
EPOXY COATED REINF. STEEL				LBS.	7,880

SPAN B

BAR	NO.	SIZE	TYPE	LENGTH	WEIGHT
A1	150	6	STR	27′ - 8″	6,233
A2	4	6	STR	23′ - 8″	142
A3	4	6	STR	19′ - 4″	116
A4	4	6	STR	15′ - 0″	90
A5	4	6	STR	10′ - 8″	64
A6	4	6	STR	6′ - 4″	38
A7	4	6	STR	2′ - 7″	16
A8	8	6	STR	27′ - 11″	335
B2	138	4	STR	24′ - 6″	2,259
B5	12	5	STR	24′ - 5″	306
B6	12	5	STR	22′ - 1″	276
S1	94	5	1	8′ - 3″	809
EPOXY COATED REINF. STEEL				LBS.	10,684

SPAN C

BAR	NO.	SIZE	TYPE	LENGTH	WEIGHT
A1	150	6	STR	27′ - 8″	6,233
A2	4	6	STR	23′ - 8″	142
A3	4	6	STR	19′ - 4″	116
A4	4	6	STR	15′ - 0″	90
A5	4	6	STR	10′ - 8″	64
A6	4	6	STR	6′ - 4″	38
A7	4	6	STR	2′ - 7″	16
A8	8	6	STR	27′ - 11″	335
B2	138	4	STR	24′ - 6″	2,259
B7	12	5	STR	21′ - 11″	274
B8	12	5	STR	24′ - 7″	308
S1	94	5	1	8′ - 3″	809
EPOXY COATED REINF. STEEL				LBS.	10,684

SPAN D

BAR	NO.	SIZE	TYPE	LENGTH	WEIGHT
A1	106	6	STR	27′ - 8″	4,405
A2	4	6	STR	23′ - 8″	142
A3	4	6	STR	19′ - 4″	116
A4	4	6	STR	15′ - 0″	90
A5	4	6	STR	10′ - 8″	64
A6	4	6	STR	6′ - 4″	38
A7	4	6	STR	2′ - 7″	16
A8	8	6	STR	27′ - 11″	335
B1	138	4	STR	18′ - 1″	1,667
B9	12	5	STR	16′ - 5″	205
B10	12	5	STR	17′ - 3″	216
S1	68	5	1	8′ - 3″	585
EPOXY COATED REINF. STEEL				LBS.	7,879

BAR TYPES

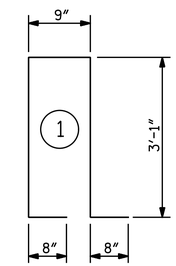

ALL BAR DIMENSIONS ARE OUT TO OUT

SUPERSTRUCTURE BILL OF MATERIAL

	CLASS AA CONCRETE		EPOXY COATED REINFORCING STEEL
	(CU.YDS.)		(LBS.)
	DECK SLAB	PARAPETS	
SPAN "A"	30.1	6.8	7,880
SPAN "B"	41.2	9.3	10,684
SPAN "C"	41.2	9.3	10,684
SPAN "D"	30.1	6.8	7,879
TOTALS	142.6	32.2	37,127

SUPERSTRUCTURE REINFORCING STEEL LENGTHS ARE BASED ON THE FOLLOWING MINIMUM SPLICE LENGTHS

BAR SIZE	SUPERSTRUCTURE EXCEPT APPROACH SLABS, PARAPET, AND BARRIER RAIL		APPROACH SLABS		PARAPET AND BARRIER RAIL
	EPOXY COATED	UNCOATED	EPOXY COATED	UNCOATED	
#4	2′-0″	1′-9″	2′-0″	1′-9″	2′-9″
#5	2′-6″	2′-2″	2′-6″	2′-2″	3′-5″
#6	3′-0″	2′-7″	3′-10″	2′-7″	4′-4″
#7	5′-3″	3′-6″			
#8	6′-10″	4′-7″			

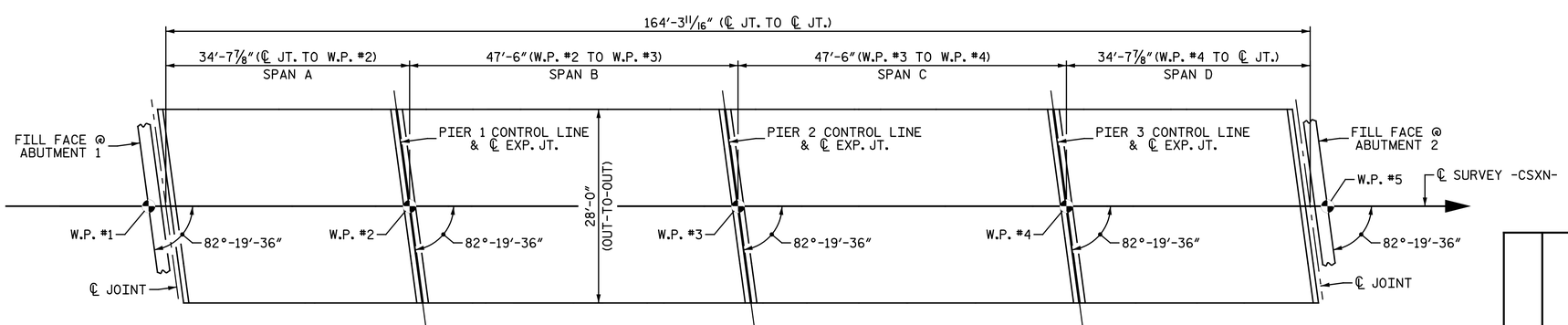

LAYOUT FOR COMPUTING AREA OF REINFORCED CONCRETE DECK SLAB
(SQ. FT. = 4,601)

PROJECT NO. U-3308
DURHAM COUNTY
STATION: 24+55.20 -LALT-
13+22.18 -CSXN-

NORTH CAROLINA PROFESSIONAL SEAL 25911 ENGINEER DUWAIN G. HATHAWAY

DocuSigned by: Duwain Hathaway
5/3/2016

Michael Baker INTERNATIONAL
Michael Baker Engineering
8000 Regency Parkway, Suite 600
Cary, North Carolina 276518
NC License No.: F-1084

STATE OF NORTH CAROLINA
DEPARTMENT OF TRANSPORTATION
RALEIGH
SUPERSTRUCTURE
BILL OF MATERIAL

REVISIONS						
NO.	BY:	DATE:	NO.	BY:	DATE:	
1			3			
2			4			

SHEET NO. S4-27
TOTAL SHEETS 68

DRAWN BY : M. D. MAYHEW DATE : 3-4-14
CHECKED BY : S. A. DENNEY DATE : 3-17-14

cmayhew 9:37:12 AM
5/3/2016
Filename: Y:\Projects\NCDOT\U-3308\Structures\Dwgs\Final\404_027_U3308_SMU_BOM.dgn

DocuSign Envelope ID: 34E2C66B-7797-4AB6-9BD3-31F0D6E698EB

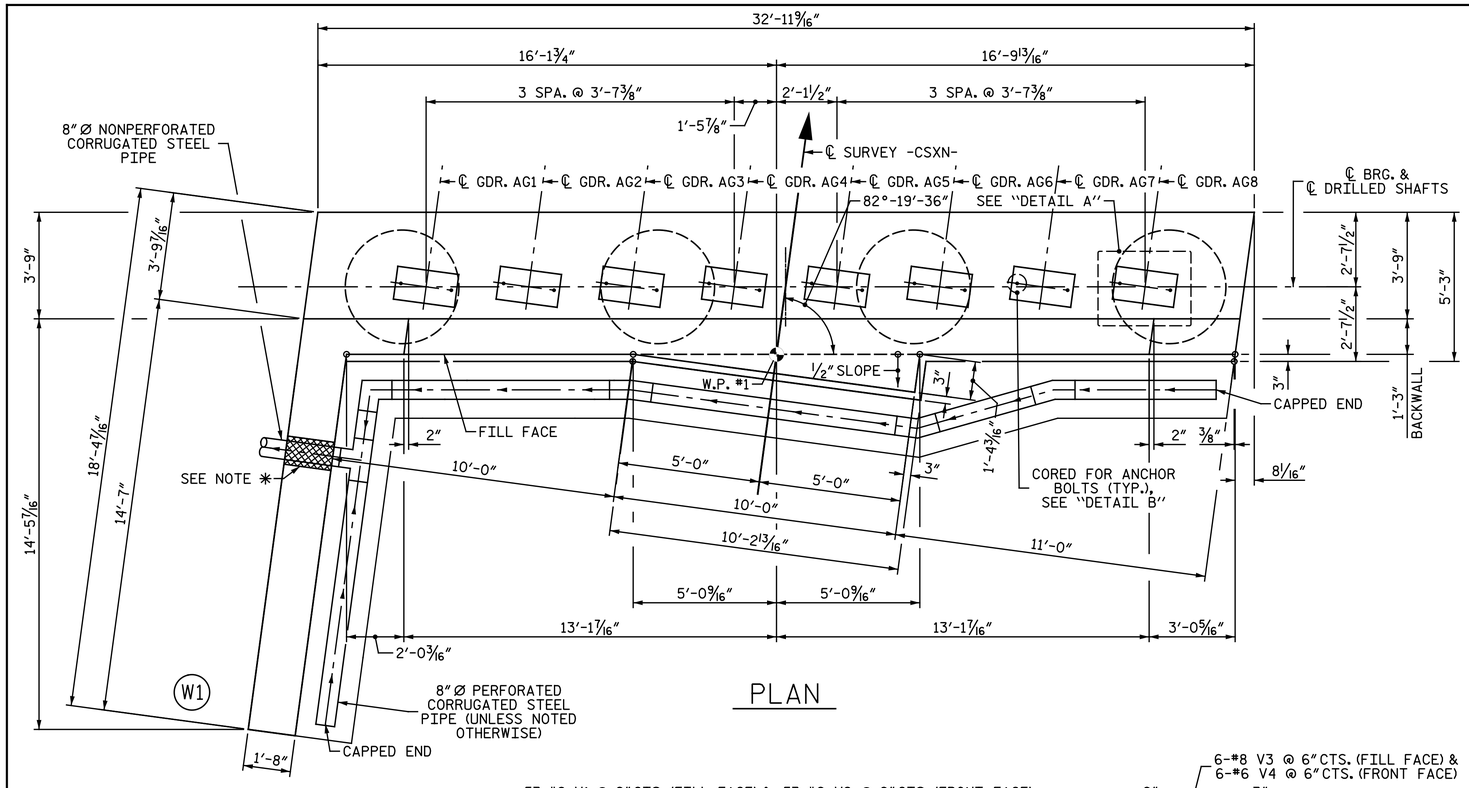

PLAN

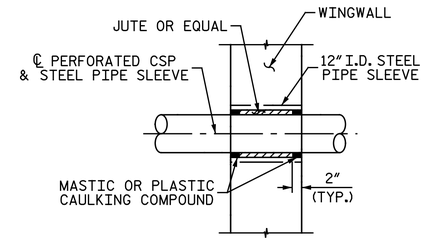

SECTION THRU WING

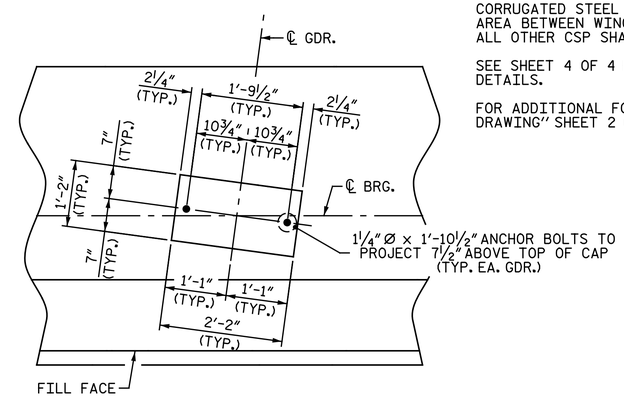

DETAIL A

NOTES:

FOR "SECTION A-A", SEE SHEET 4 OF 4.

FOR "SECTION B-B", SEE SHEET 4 OF 4.

✱ 12" Ø I.D. STEEL PIPE SLEEVE (3/8" WALL THICKNESS) TO BE FLUSH WITH BOTH FACES OF WING. FIELD BEND REINFORCING STEEL AS NECESSARY TO PROVIDE FOR SLEEVE. SEE "SECTION THRU WING" FOR DETAILS. INSTALL CSP WITH A MINMUM OF 1/8"/1' SLOPE.

STIRRUPS IN CAP MAY BE SHIFTED AS NECESSARY TO CLEAR ANCHOR BOLTS.

PAYMENT FOR PIPE SLEEVE INSERT IS CONSIDERED INCIDENTAL TO THE CONSTRUCTION OF THE ABUTMENT.

DAMPPROOFING LIMITS: BACK OF BACKWALL, BACK OF ABUTMENT SEAT, AND BACK OF WINGWALLS.

FOR PIPE SLEEVE INSERTS, SEE SPECIAL PROVISIONS FOR STRUCTURE DRAINAGE SYSTEM.

CORRUGATED STEEL PIPE LOCATED IN DRAINAGE AREA BETWEEN WINGS SHALL BE PERFORATED. ALL OTHER CSP SHALL BE NON-PERFORATED.

SEE SHEET 4 OF 4 FOR ADDITIONAL NOTES AND DETAILS.

FOR ADDITIONAL FOUNDATION NOTES, SEE "GENERAL DRAWING" SHEET 2 OF 5.

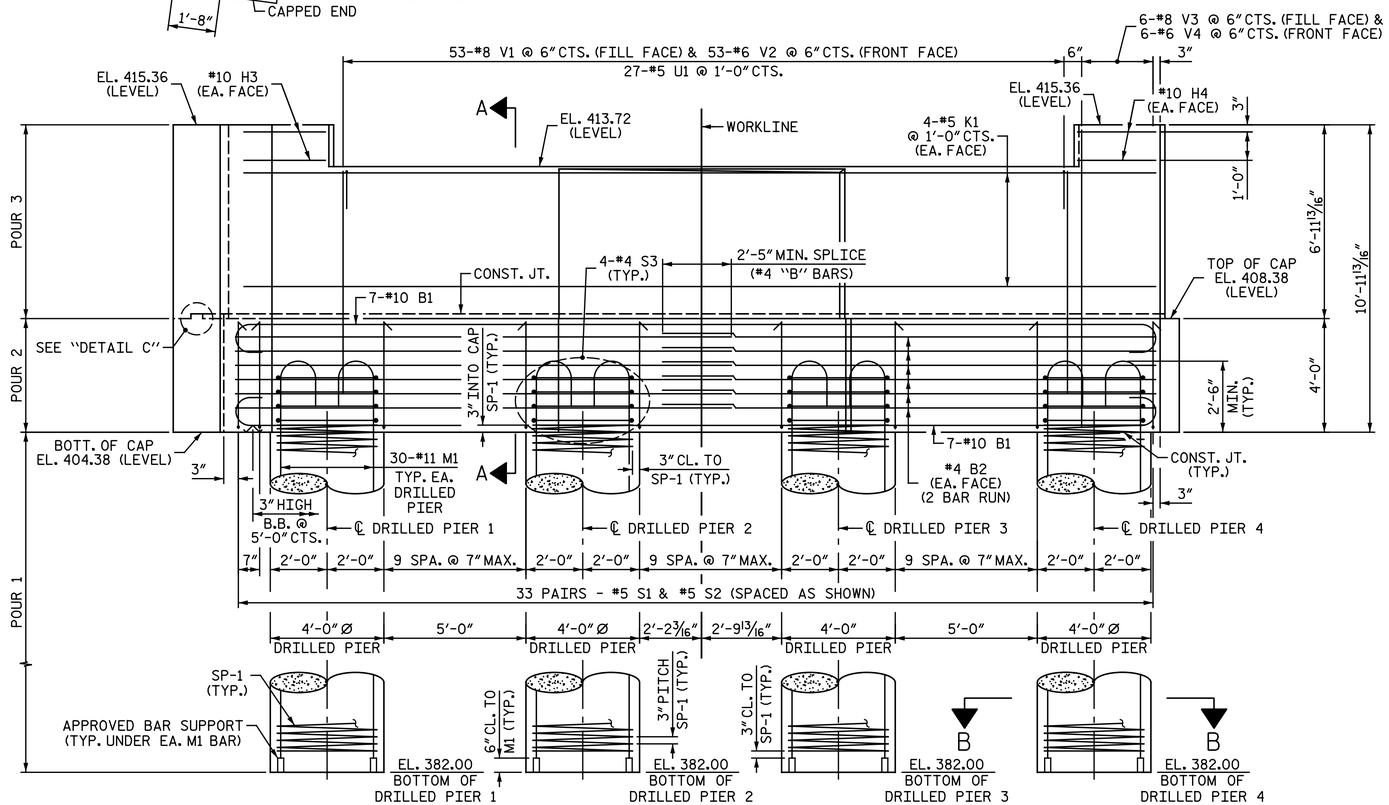

ELEVATION

8" Ø PERFORATED CORRUGATED PIPE DRAIN NOT SHOWN FOR CLARITY.

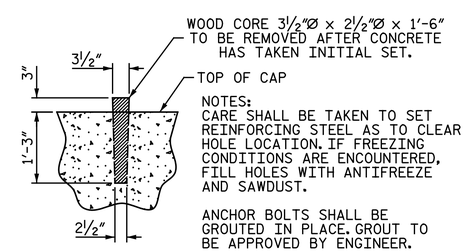

DETAIL B

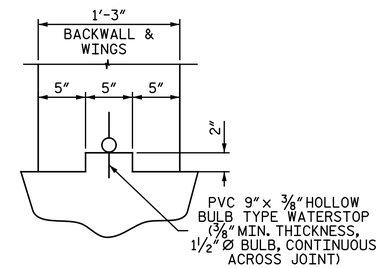

DETAIL C

PROJECT NO. U-3308

DURHAM COUNTY

STATION: 24+55.20 -LALT- / 13+22.18 -CSXN-

SHEET 1 OF 4

STATE OF NORTH CAROLINA
DEPARTMENT OF TRANSPORTATION
RALEIGH

SUBSTRUCTURE

ABUTMENT 1

NORTH CAROLINA PROFESSIONAL SEAL 25911 ENGINEER DUAIN G. HATHAWAY

DocuSigned by: Duain Hathaway 2B37B8D7D0A4401...

5/3/2016

Michael Baker INTERNATIONAL

Michael Baker Engineering
8000 Regency Parkway, Suite 600
Cary, North Carolina 27518
NC License No.: F-1084

REVISIONS						
NO.	BY:	DATE:	NO.	BY:	DATE:	
1			3			
2			4			

SHEET NO. S4-28

TOTAL SHEETS 68

DRAWN BY: M. D. MAYHEW DATE: 3-6-14
CHECKED BY: S. A. DENNEY DATE: 3-11-14

cmayhew 5/3/2016 9:37:13 AM
Filename: Y:\Projects\NCDOT\U-3308\Structures\Dwgs\Find\404_028_U3308_SMU_AB101.dgn

SITE 4

DocuSign Envelope ID: 34E2C66B-7797-4AB6-9BD3-31F0D6E698EB

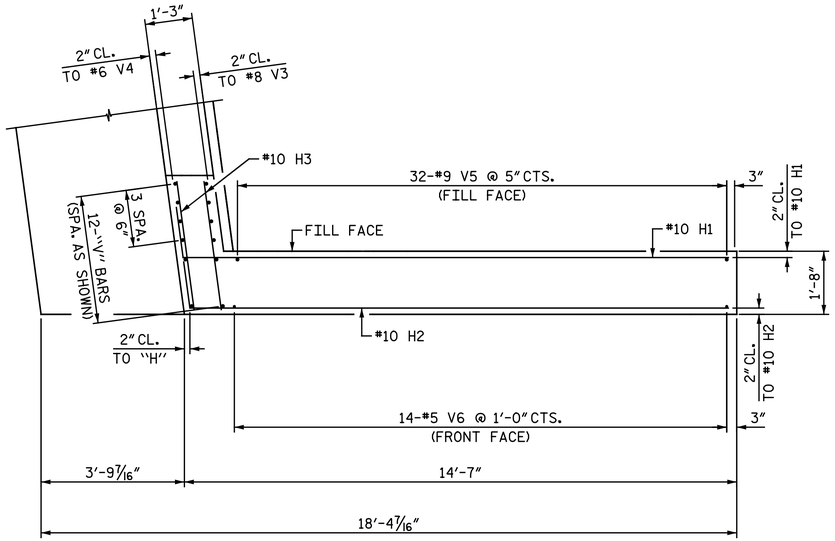

PLAN OF WING WALL (W1)

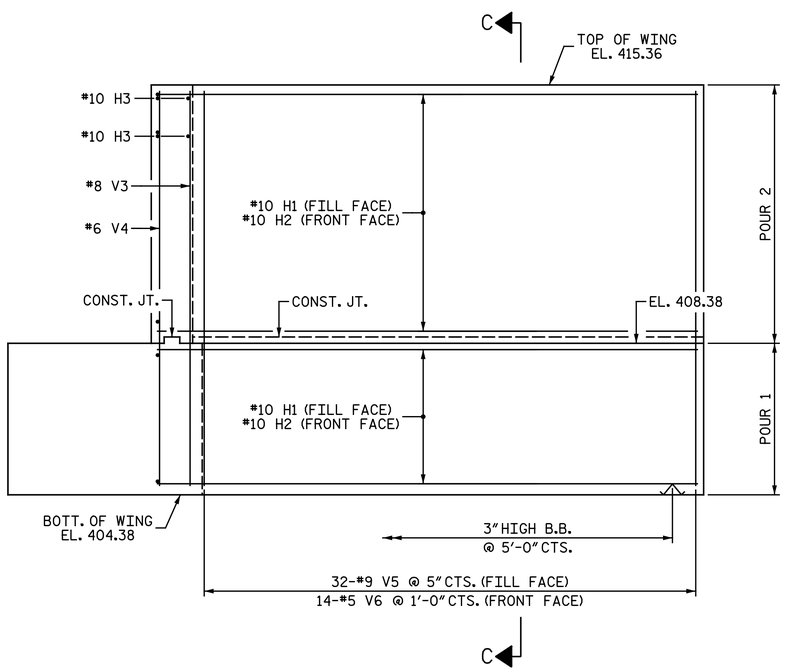

ELEVATION OF WING WALL (W1)

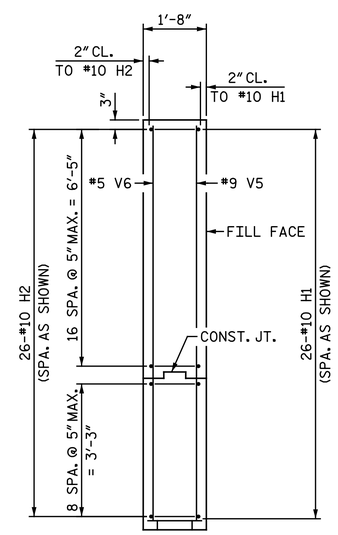

SECTION C-C

PROJECT NO. U-3308

DURHAM COUNTY

STATION: 24+55.20 -LALT- / 13+22.18 -CSXN-

SHEET 2 OF 4

STATE OF NORTH CAROLINA
DEPARTMENT OF TRANSPORTATION
RALEIGH

SUBSTRUCTURE

ABUTMENT 1

NORTH CAROLINA PROFESSIONAL SEAL 25911 ENGINEER DWAIN G. HATHAWAY

DocuSigned by: Dwain Hathaway 2837B0071DA0460...

5/3/2016

Michael Baker INTERNATIONAL

Michael Baker Engineering
8000 Regency Parkway, Suite 600
Cary, North Carolina 27518
NC License No.: F-1084

REVISIONS						
NO.	BY:	DATE:	NO.	BY:	DATE:	
1			3			
2			4			

SHEET NO. S4-29

TOTAL SHEETS 68

DRAWN BY : M. D. MAYHEW DATE : 3-6-14
CHECKED BY : S. A. DENNEY DATE : 3-11-14

mayhew
5/3/2016 9:37:14 AM
Filename: Y:\Projects\NCDOT\U-3308\Structures\Dwgs\Final\404_029_U3308_SMU_AB102.dgn

SITE 4

DocuSign Envelope ID: 34E2C66B-7797-4AB6-9BD3-31F0D6E698EB

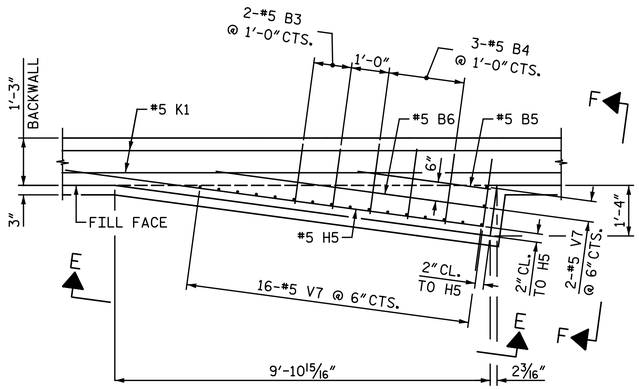

PLAN - BACKWALL EXTENSION DETAIL

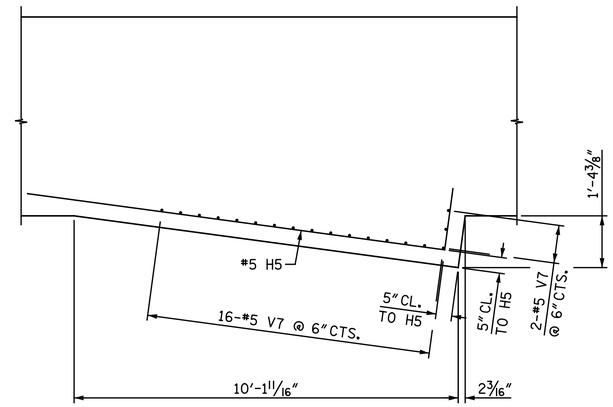

PLAN - CAP EXTENSION DETAIL

NOTE: BACKWALL NOT SHOWN FOR CLARITY

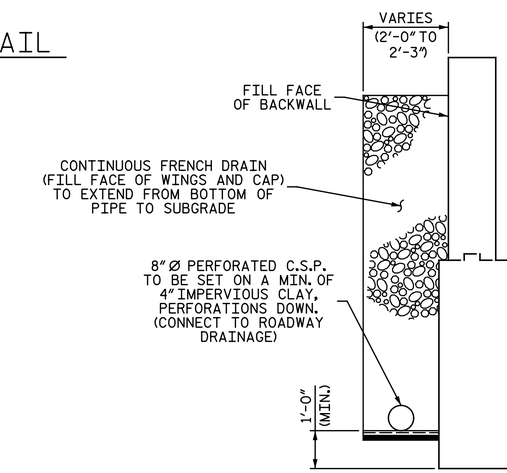

DRAINAGE AT ABUTMENT 1

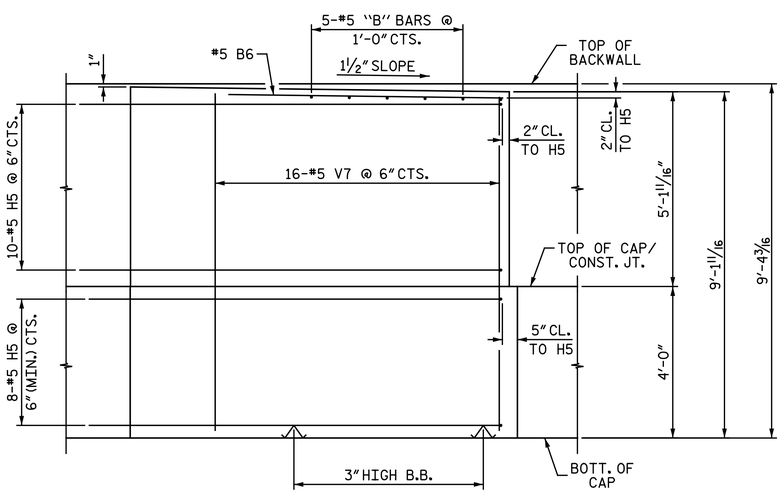

VIEW E-E

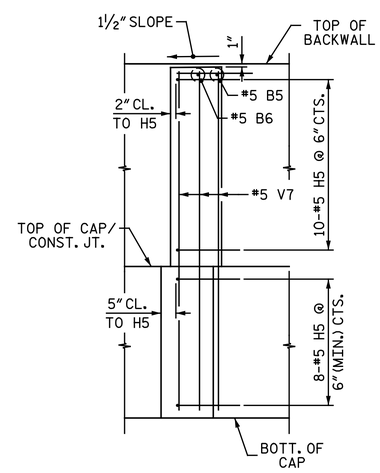

VIEW F-F

PROJECT NO. U-3308

DURHAM COUNTY

STATION: 24+55.20 -LALT-
13+22.18 -CSXN-

SHEET 3 OF 4

STATE OF NORTH CAROLINA
DEPARTMENT OF TRANSPORTATION
RALEIGH

SUBSTRUCTURE

ABUTMENT 1

NORTH CAROLINA PROFESSIONAL SEAL 25911 ENGINEER DWAIN G. HATHAWAY

DocuSigned by: Dwain Hathaway
2837B607D7DA0460...
5/3/2016

Michael Baker INTERNATIONAL

Michael Baker Engineering
8000 Regency Parkway, Suite 600
Cary, North Carolina 276518
NC License No.: F-1084

REVISIONS							
NO.	BY:	DATE:	NO.	BY:	DATE:	SHEET NO.	S4-30
1			3			TOTAL SHEETS	68
2			4				

DRAWN BY : M. D. MAYHEW DATE : 3-6-14
CHECKED BY : S. A. DENNEY DATE : 3-11-14

cmayhew
5/3/2016 9:37:14 AM
Filename: Y:\Projects\NCDOT\U-3308\Structures\Dwgs\Final\404_030_U3308_SMU_AB103.dgn

SITE 4

DocuSign Envelope ID: 34E2C66B-7797-4AB6-9BD3-31F0D6E698EB

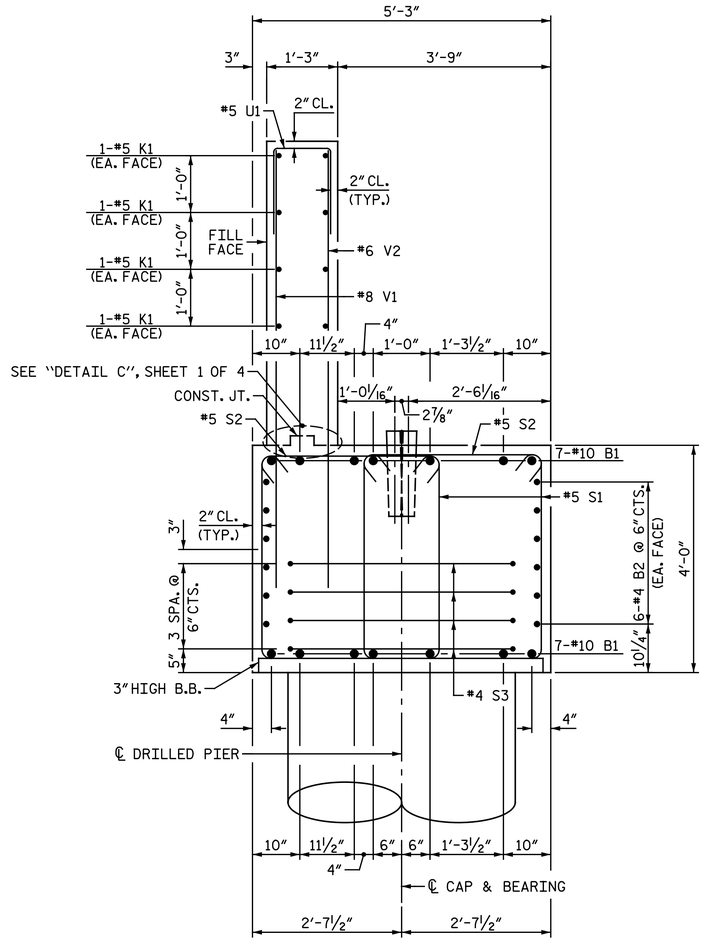

SECTION A-A

DRILLED SHAFT REINFORCEMENT NOT SHOWN FOR CLARITY.

NOTES:

BACKWALL SHALL BE PLACED BEFORE APPLYING EPOXY PROTECTIVE COATING.

THE TOP SURFACE AREAS OF THE ABUTMENT CAPS SHALL BE CURED IN ACCORDANCE WITH THE STANDARD SPECIFICATIONS EXCEPT THE MEMBRANE CURING COMPOUND METHOD SHALL NOT BE USED.

THE CONTRACTOR'S ATTENTION IS CALLED TO THE FACT THAT THE LONGITUDINAL REINFORCEMENT FOR THE DRILLED PIERS IS DETAILED WITH 3 FEET OF EXTRA LENGTH.

ALL STEEL IN THE DRILLED PIERS IS INCLUDED IN THE PAY ITEMS FOR "REINFORCING STEEL" AND "SPIRAL COLUMN REINFORCING STEEL".

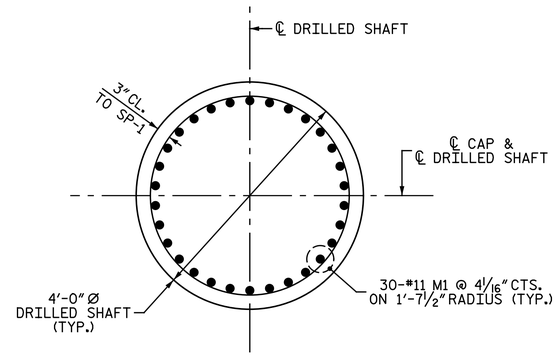

SECTION B-B

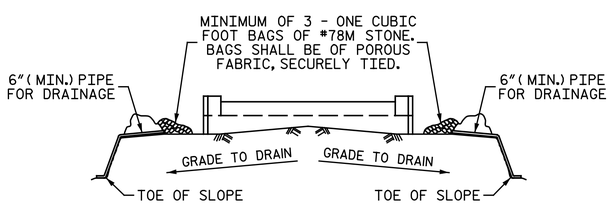

BAGGED STONE AND PIPE SHALL BE PLACED IMMEDIATELY AFTER COMPLETION OF END BENT EXCAVATION. PIPE MAY BE EITHER CONCRETE, CORRUGATED STEEL, CORRUGATED ALUMINUM ALLOY, OR CORRUGATED PLASTIC. PERFORATED PIPE WILL NOT BE ALLOWED.

BAGGED STONE SHALL REMAIN IN PLACE UNTIL THE ENGINEER DIRECTS THAT IT BE REMOVED. THE CONTRACTOR SHALL REMOVE AND DISPOSE OF SILT ACCUMULATIONS AT BAGGED STONE WHEN SO DIRECTED BY THE ENGINEER. BAGS SHALL BE REMOVED AND REPLACED WHENEVER THE ENGINEER DETERMINES THAT THEY HAVE DETERIORATED AND LOST THEIR EFFECTIVENESS.

NO SEPARATE PAYMENT WILL BE MADE FOR THIS WORK AND THE ENTIRE COST OF THIS WORK SHALL BE INCLUDED IN THE UNIT CONTRACT PRICE BID FOR THE SEVERAL PAY ITEMS.

TEMPORARY DRAINAGE AT ABUTMENT

BAR TYPES

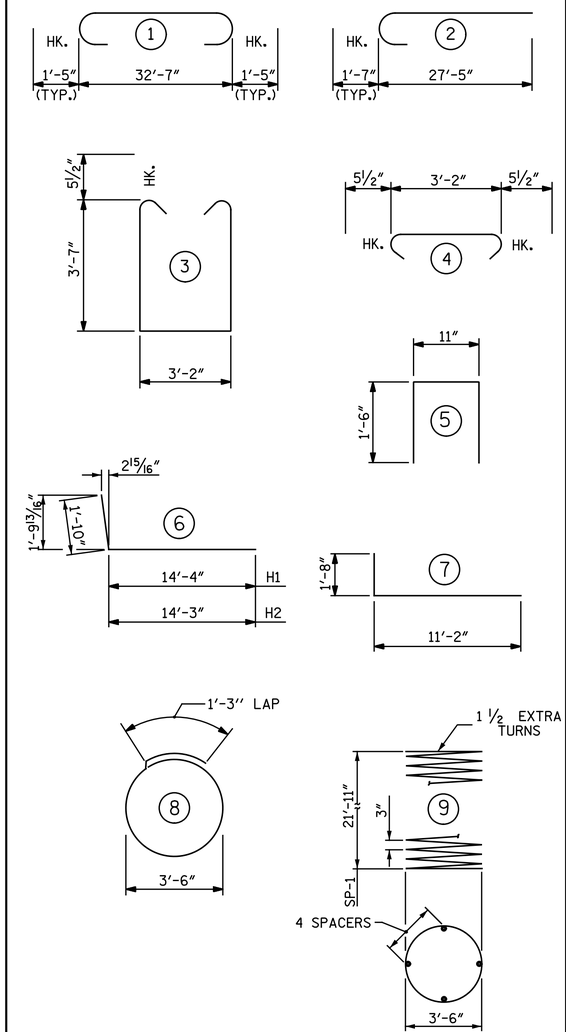

ARE BAR DIMENSIONS ARE OUT TO OUT.

✳ THE SP-1 SPIRAL REINFORCING STEEL SHALL BE W31 OR D-31 COLD DRAWN WIRE OR #5 PLAIN OR DEFORMED BAR.

BILL OF MATERIAL
ABUTMENT 1

BAR	NO.	SIZE	TYPE	LENGTH	WEIGHT
B1	14	10	1	35' - 5"	2,134
B2	24	4	STR	17' - 6"	281
B3	2	5	STR	1' - 6"	3
B4	3	5	STR	1' - 10"	6
B5	1	5	STR	3' - 6"	4
B6	1	5	STR	7' - 3"	8
H1	26	10	6	16' - 2"	1,809
H2	26	10	6	16' - 1"	1,799
H3	4	10	STR	3' - 4"	57
H4	4	10	STR	2' - 8"	46
H5	18	5	7	12' - 10"	241
K1	8	5	STR	32' - 7"	272
S1	66	5	3	11' - 3"	774
S2	66	5	4	4' - 1"	281
S3	16	4	8	12' - 3"	131
M1	120	11	2	29' - 0"	18,489
U1	27	5	5	3' - 11"	110
V1	53	8	STR	8' - 11"	1,262
V2	53	6	STR	8' - 11"	710
V3	12	8	STR	10' - 6"	336
V4	12	6	STR	10' - 6"	189
V5	32	9	STR	10' - 6"	1,142
V6	14	5	STR	10' - 6"	153
V7	18	5	STR	8' - 8"	163
SP-1	4	✳	9	966' - 1"	4,032

REINFORCING STEEL	LBS.	30,400
SPIRAL COLUMN REINF. STEEL	LBS.	4,032
CLASS "AA" CONCRETE BREAKDOWN		
POUR #2 CAP, LOWER & WING WALLS	C.Y.	30.1
POUR #3 BACKWALL & UPPER WING WALLS	C.Y.	15.6
TOTAL CLASS "AA" CONCRETE	C.Y.	45.7

DRILLED PIERS

4'-0" DIA. DRILLED PIERS IN SOIL		
DRILLED PIERS :	L.F.	59.5
4'-0" DIA. DRILLED PIERS NOT IN SOIL		
DRILLED PIERS :	L.F.	30.0
DRILLED PIER CONCRETE BREAKDOWN		
POUR #1 DRILLED PIERS	C.Y.	41.7
CSL TUBES	L.F.	382.08

PROJECT NO. U-3308
DURHAM COUNTY
STATION: 24+55.20 -LALT-
13+22.18 -CSXN-
SHEET 4 OF 4

NORTH CAROLINA PROFESSIONAL SEAL 25911 ENGINEER DWAIN G. HATHAWAY

DocuSigned by: Dwain Hathaway
2837B0071DA0460...
5/3/2016

Michael Baker INTERNATIONAL
Michael Baker Engineering
8000 Regency Parkway, Suite 600
Cary, North Carolina 276518
NC License No.: F-1084

STATE OF NORTH CAROLINA
DEPARTMENT OF TRANSPORTATION
RALEIGH
SUBSTRUCTURE

ABUTMENT 1

REVISIONS								SHEET NO.
NO.	BY:	DATE:	NO.	BY:	DATE:			S4-31
1			3					TOTAL SHEETS
2			4					68

DRAWN BY : M. D. MAYHEW DATE : 3-6-14
CHECKED BY : S. A. DENNEY DATE : 3-11-14

cmayhew 5/3/2016 9:37:14 AM
Filename: Y:\Projects\NCDOT\U-3308\Structures\Dwgs\Final\404_031_U3308_SMU_AB104.dgn

SITE 4

DocuSign Envelope ID: 34E2C66B-7797-4AB6-9BD3-31F0D6E698EB

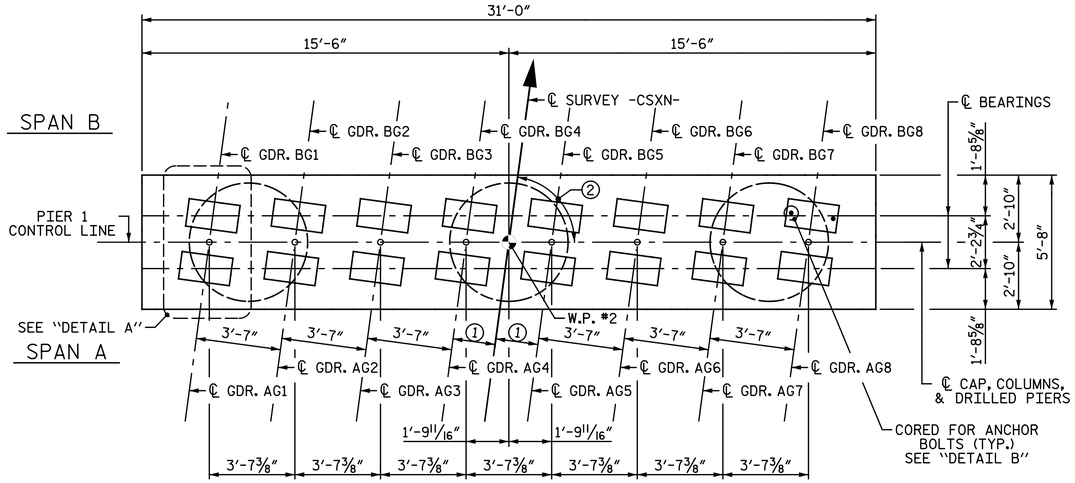

PLAN

① 1'-9 1/2"

② 82°-19'-36"

NOTES:

FOR "SECTION A-A", SEE SHEET 2 OF 3.

FOR "SECTION B-B", SEE SHEET 2 OF 3.

FOR "SECTION C-C", SEE SHEET 3 OF 3.

FOR "VIEW D-D", SEE SHEET 3 OF 3.

FOR "DETAIL B", SEE SHEET 2 OF 3.

SEE SHEET 3 OF 3 FOR ADDITIONAL NOTES AND DETAILS.

THE TOP SURFACE OF THE PIER CAPS SHALL BE CURED IN ACCORDANCE WITH THE STANDARD SPECIFICATIONS EXCEPT THE MEMBRANE CURING COMPOUND METHOD SHALL NOT BE USED.

THE LOCATION OF THE CONSTRUCTION JOINT IN THE DRILLED PIERS IS BASED ON AN APPROXIMATE GROUND LINE ELEVATION. IF THE CONSTRUCTION JOINT IS ABOVE THE ACTUAL GROUND ELEVATION, THE CONTRACTOR SHALL PLACE THE CONSTRUCTION JOINT 1 FOOT BELOW THE GROUND LINE.

METHOD A WATERPROOFING SHOULD BE APPLIED AROUND THE CONSTRUCTION JOINT AT THE COLUMN AND DRILLED PIER FOR EACH COLUMN.

DAMPPROOFING SHOULD BE APPLIED TO ANY PART OF THE COLUMN THAT IS BELOW THE GROUND LINE.

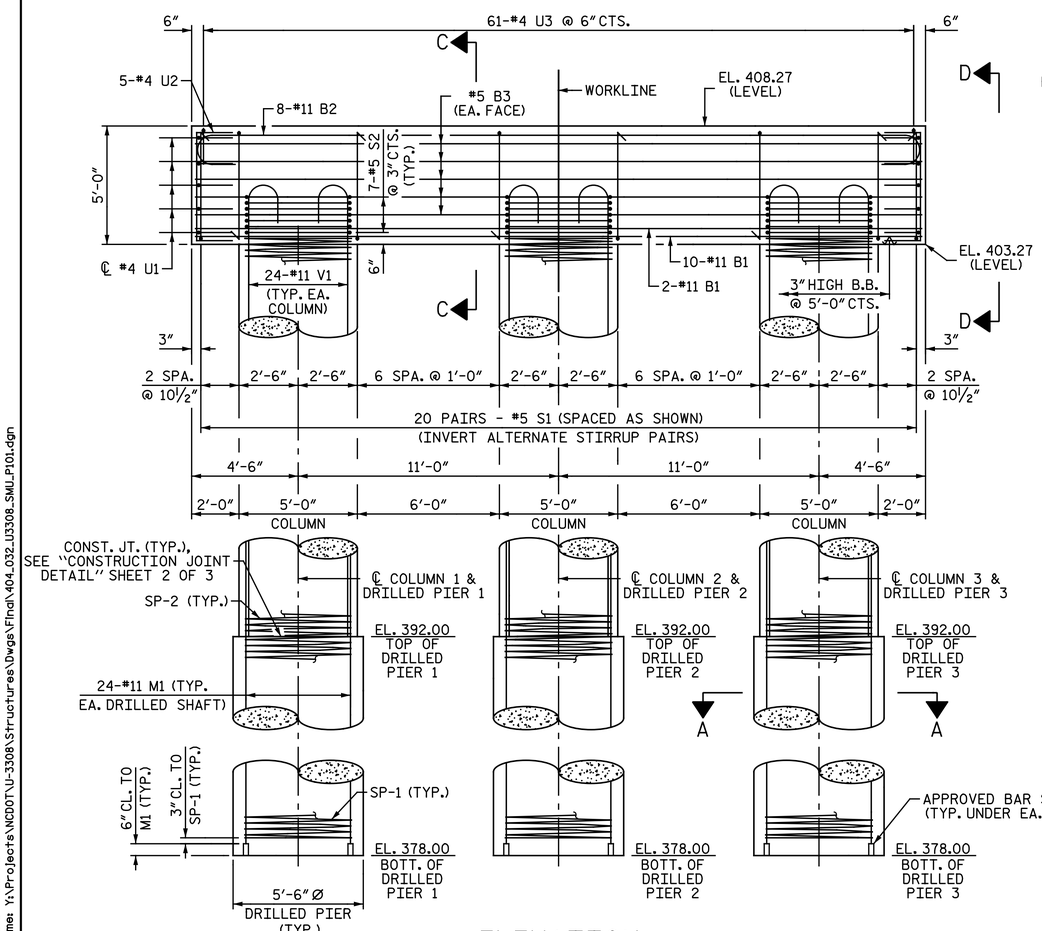

ELEVATION

ALL DIMENSIONS AND DETAILS SHOWN FOR DRILLED PIERS ARE TYPICAL FOR EACH PIER UNLESS OTHERWISE NOTED.

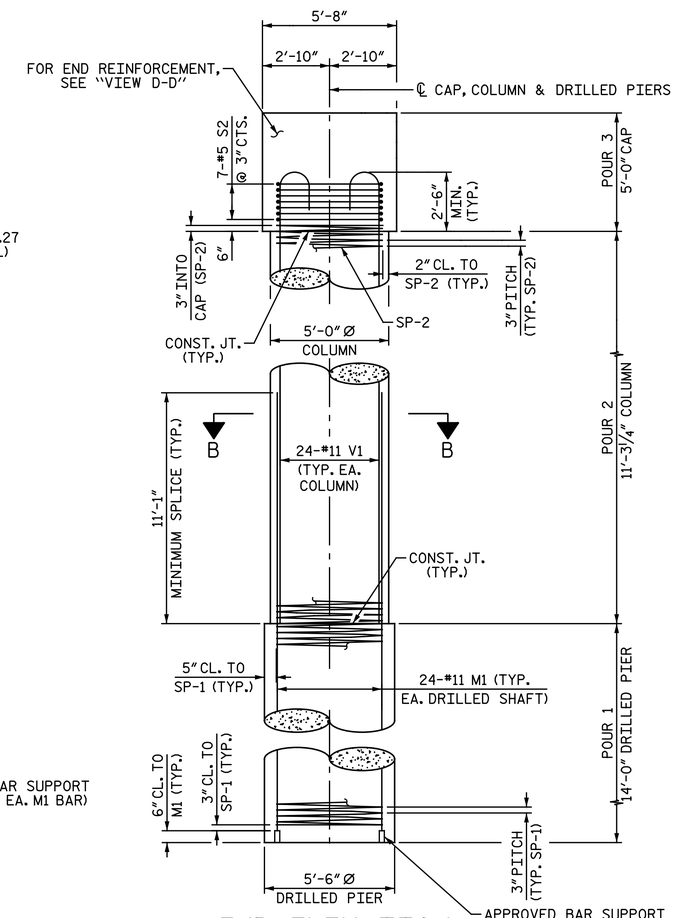

END ELEVATION

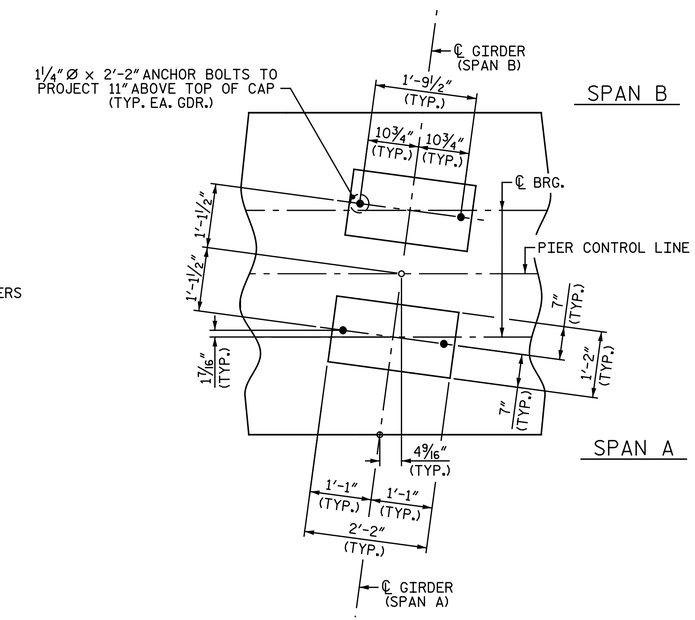

DETAIL A

ALL DIMENSIONS AND DETAILS ARE TYPICAL FOR ALL BEARINGS AT EACH GIRDER LOCATION

SEE "BEARING DETAILS" SHEET FOR BEARING ASSEMBLY DETAILS

PROJECT NO. U-3308

DURHAM COUNTY

STATION: 24+55.20 -LALT-
13+22.18 -CSXN-

SHEET 1 OF 3

STATE OF NORTH CAROLINA
DEPARTMENT OF TRANSPORTATION
RALEIGH

SUBSTRUCTURE

PIER I

NORTH CAROLINA PROFESSIONAL SEAL 25911 ENGINEER DUWAIN G. HATHAWAY

DocuSigned by: Duwain Hathaway 285786071CA0460...

5/3/2016

Michael Baker INTERNATIONAL

Michael Baker Engineering
8000 Regency Parkway, Suite 600
Cary, North Carolina 276518
NC License No.: F-1084

REVISIONS						
NO.	BY:	DATE:	NO.	BY:	DATE:	
1			3			
2			4			

SHEET NO. S4-32

TOTAL SHEETS 68

DRAWN BY : M. D. MAYHEW DATE : 5-9-14

CHECKED BY : A. L. PHILLIPS DATE : 5-12-14

cmayhew 9:37:15 AM
5/3/2016
Filename: Y:\Projects\NCDOT\U-3308\Structures\Dwgs\Final\404_032_U3308_SMU_P101.dgn

SITE 4

DocuSign Envelope ID: 34E2C66B-7797-4AB6-9BD3-31F0D6E698EB

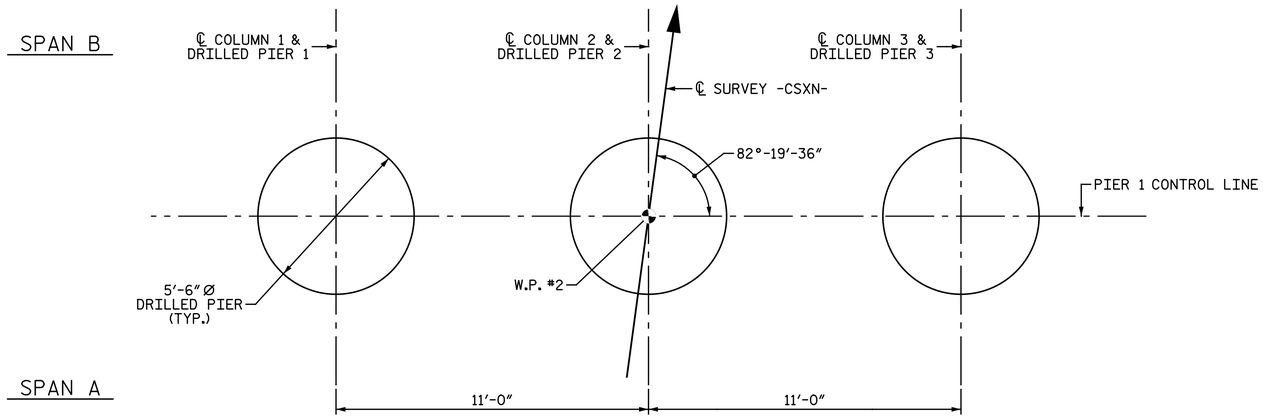

PLAN OF DRILLED PIERS

ALL DIMENSIONS AND DETAILS SHOWN FOR DRILLED PIERS ARE TYPICAL FOR EACH PIER UNLESS OTHERWISE NOTED.

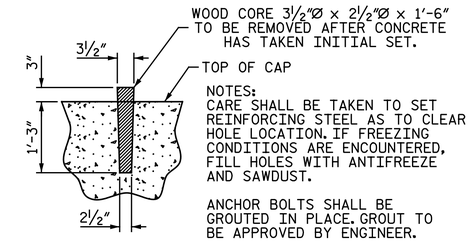

DETAIL B

FOR LOCATION OF "DETAIL B", SEE SHEET 1 OF 3.

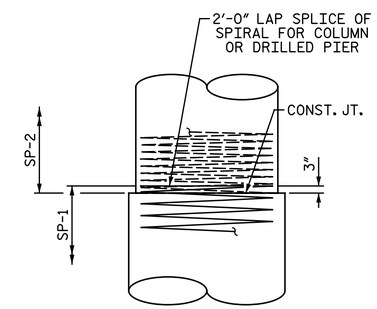

CONSTRUCTION JOINT DETAIL

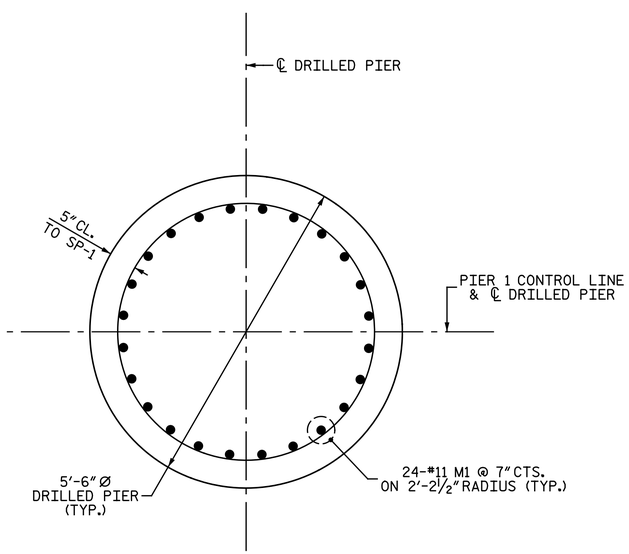

SECTION A-A

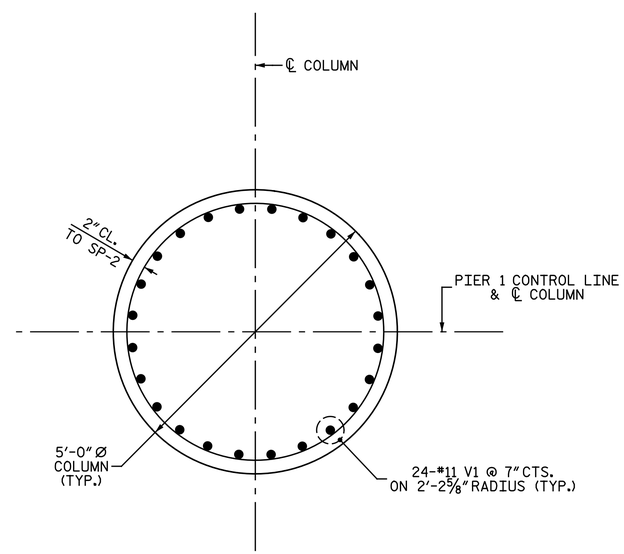

SECTION B-B

PROJECT NO. U-3308

DURHAM COUNTY

STATION: 24+55.20 -LALT-
13+22.18 -CSXN-

SHEET 2 OF 3

NORTH CAROLINA PROFESSIONAL SEAL 25911 ENGINEER DWAIN G. HATHAWAY

DocuSigned by: Dwain Hathaway 283786071CA0460...

5/3/2016

Michael Baker INTERNATIONAL

Michael Baker Engineering
8000 Regency Parkway, Suite 800
Cary, North Carolina 27518
NC License No.: F-1084

STATE OF NORTH CAROLINA
DEPARTMENT OF TRANSPORTATION
RALEIGH

SUBSTRUCTURE

PIER 1 DETAILS

REVISIONS							
NO.	BY:	DATE:	NO.	BY:	DATE:		
1			3				
2			4				

SHEET NO. S4-33

TOTAL SHEETS 68

DRAWN BY : M. D. MAYHEW DATE : 5-9-14
CHECKED BY : A. L. PHILLIPS DATE : 5-12-14

cmayhew 9:37:16 AM
5/3/2016
Filename: Y:\Projects\NCDOT\U-3308\Structures\Dwgs\Final\404_033_U3308_SMU_P102.dgn

SITE 4

DocuSign Envelope ID: 34E2C66B-7797-4AB6-9BD3-31F0D6E698EB

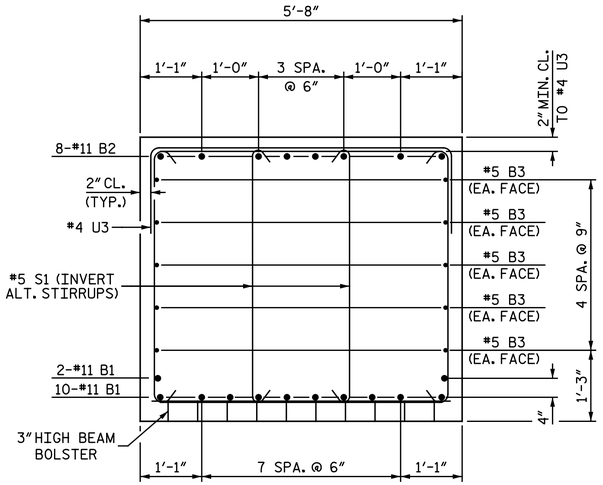

SECTION C-C

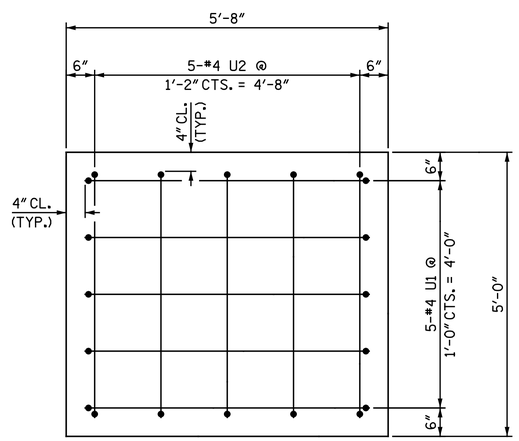

VIEW D-D

NOTES:

STIRRUPS IN CAP MAY BE SHIFTED AS NECESSARY TO CLEAR ANCHOR BOLTS.

HOOKS ON "V" BARS MAY BE TURNED AS NECESSARY FOR PLACING REINFORCING STEEL.

ALL STEEL IN THE DRILLED PIERS IS INCLUDED IN THE PAY ITEMS FOR "EPOXY COATED REINFORCING STEEL" AND "EPOXY COATED SPIRAL COLUMN REINFORCING STEEL".

THE CONTRACTORS ATTENTION IS CALLED TO THE FACT THAT THE LONGITUDINAL REINFORCEMENT FOR THE DRILLED PIERS IS DETAILED WITH 3 FEET OF EXTRA LENGTH.

FOR DRILLED PIERS, SEE SECTION 411 OF THE STANDARD SPECIFICATIONS.

FOR ADDITIONAL FOUNDATION NOTES, SEE "GENERAL DRAWING" SHEET 2 OF 5.

BAR TYPES

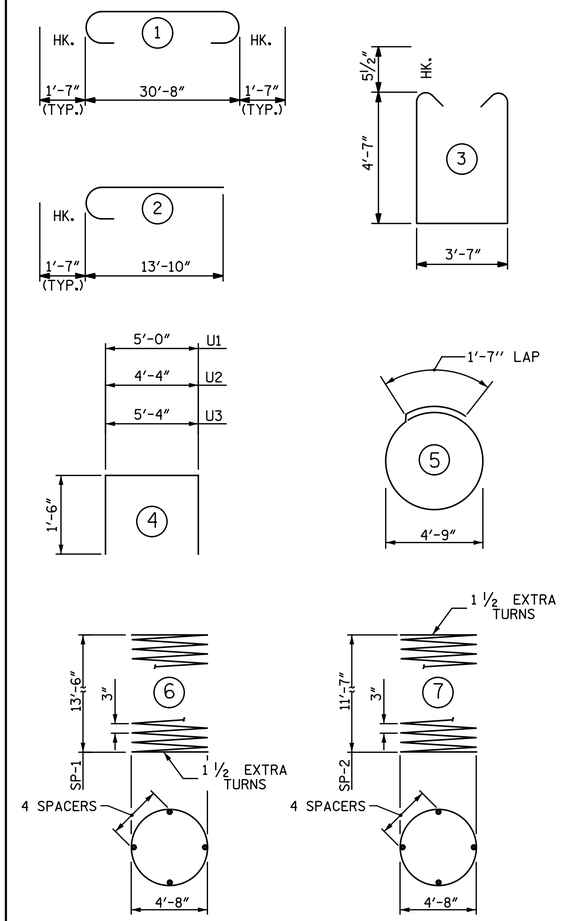

ALL BAR DIMENSIONS ARE OUT TO OUT.

BILL OF MATERIAL
PIER I

BAR	NO.	SIZE	TYPE	LENGTH	WEIGHT
B1	12	11	STR	30' - 8"	1,955
B2	8	11	1	33' - 10"	1,438
B3	10	5	STR	30' - 8"	320
▲ M1	72	11	STR	27' - 7"	10,552
S1	40	5	3	13' - 8"	570
S2	21	5	5	16' - 7"	363
U1	10	4	4	8' - 0"	53
U2	10	4	4	7' - 4"	49
U3	61	4	4	8' - 4"	340
▲ V1	72	11	2	15' - 5"	5,897
▲ SP-1	3	✳	6	804' - 9"	2,517
▲ SP-2	3	✳✳	7	695' - 1"	1,392

REINFORCING STEEL	LBS.	5,088
EPOXY COATED REINFORCING STEEL	LBS.	16,449
EPOXY COATED SPIRAL COLUMN REINF. STEEL	LBS.	3,909
CLASS "AA" CONCRETE BREAKDOWN		
POUR #2 COLUMN	C.Y.	24.6
POUR #3 CAP	C.Y.	32.5
TOTAL CLASS "AA" CONCRETE	C.Y.	57.1

DRILLED PIERS

5'-6" DIA. DRILLED PIERS IN SOIL		
DRILLED PIERS :	L.F.	7.0
5'-6" DIA. DRILLED PIERS NOT IN SOIL		
DRILLED PIERS :	L.F.	35.0
DRILLED PIER CONCRETE BREAKDOWN		
POUR #1 DRILLED PIERS	C.Y.	37.0
CSL TUBES	L.F.	232.5

✳ THE SP-1 SPIRAL REINFORCING STEEL SHALL BE W31 OR D-31 COLD DRAWN WIRE OR #5 PLAIN OR DEFORMED BAR.

✳✳ THE SP-2 SPIRAL REINFORCING STEEL SHALL BE W20 OR D-20 COLD DRAWN WIRE OR #4 PLAIN OR DEFORMED BAR.

▲ DENOTES EPOXY COATED REINFORCING STEEL

PROJECT NO. U-3308
DURHAM COUNTY
STATION: 24+55.20 -LALT-
13+22.18 -CSXN-

SHEET 3 OF 3

NORTH CAROLINA PROFESSIONAL SEAL 25911 ENGINEER DWAIN G. HATHAWAY

DocuSigned by: Dwain Hathaway
2837B0071CAD460...
5/3/2016

STATE OF NORTH CAROLINA
DEPARTMENT OF TRANSPORTATION
RALEIGH

SUBSTRUCTURE

PIER I DETAILS

Michael Baker INTERNATIONAL
Michael Baker Engineering
8000 Regency Parkway, Suite 800
Cary, North Carolina 276518
NC License No.: F-1084

REVISIONS								SHEET NO.
NO.	BY:	DATE:	NO.	BY:	DATE:			S4-34
1			3					TOTAL SHEETS
2			4					68

DRAWN BY : M. D. MAYHEW DATE : 5-9-14
CHECKED BY : A. L. PHILLIPS DATE : 5-12-14

cmayhew 5/3/2016 9:37:17 AM
Filename: Y:\Projects\NCDOT\U-3308\Structures\Dwgs\Final\404_034_U3308_SMU_P103.dgn

SITE 4

DocuSign Envelope ID: 34E2C66B-7797-4AB6-9BD3-31F0D6E698EB

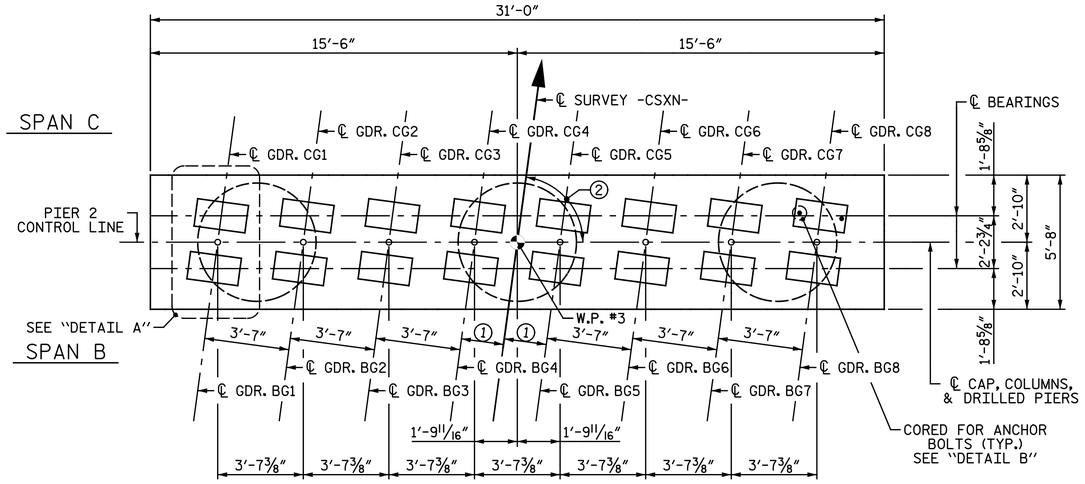

PLAN

① 1'-9 1/2"

② 82°-19'-36"

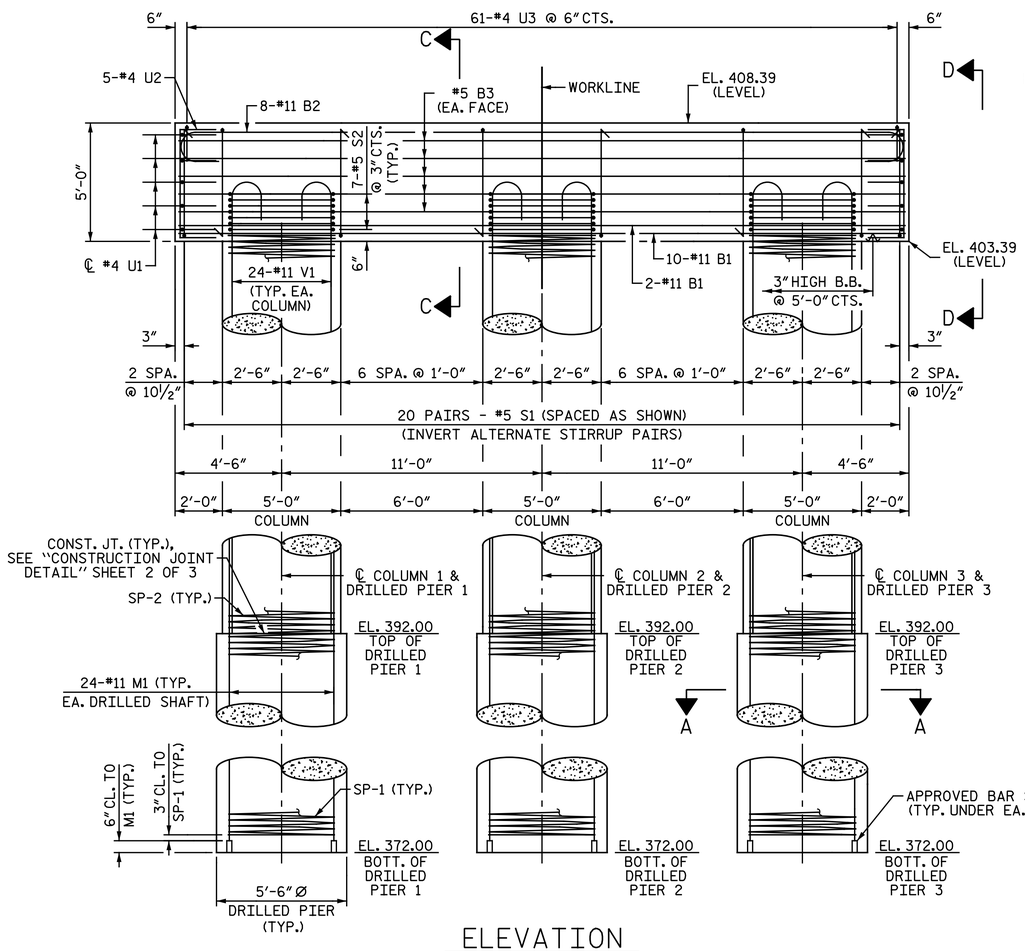

ELEVATION

ALL DIMENSIONS AND DETAILS SHOWN FOR DRILLED PIERS ARE TYPICAL FOR EACH PIER UNLESS OTHERWISE NOTED.

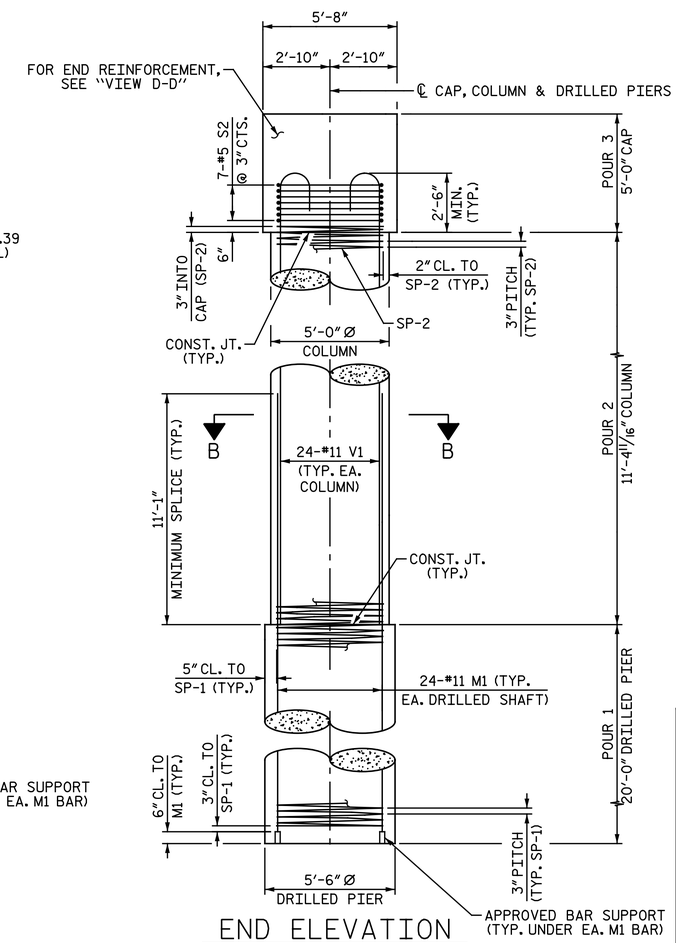

END ELEVATION

NOTES:

FOR "SECTION A-A", SEE SHEET 2 OF 3.

FOR "SECTION B-B", SEE SHEET 2 OF 3.

FOR "SECTION C-C", SEE SHEET 3 OF 3.

FOR "VIEW D-D", SEE SHEET 3 OF 3.

FOR "DETAIL B", SEE SHEET 2 OF 3.

SEE SHEET 3 OF 3 FOR ADDITIONAL NOTES AND DETAILS.

THE TOP SURFACE OF THE PIER CAPS SHALL BE CURED IN ACCORDANCE WITH THE STANDARD SPECIFICATIONS EXCEPT THE MEMBRANE CURING COMPOUND METHOD SHALL NOT BE USED.

THE LOCATION OF THE CONSTRUCTION JOINT IN THE DRILLED PIERS IS BASED ON AN APPROXIMATE GROUND LINE ELEVATION. IF THE CONSTRUCTION JOINT IS ABOVE THE ACTUAL GROUND ELEVATION, THE CONTRACTOR SHALL PLACE THE CONSTRUCTION JOINT 1 FOOT BELOW THE GROUND LINE.

METHOD A WATERPROOFING SHOULD BE APPLIED AROUND THE CONSTRUCTION JOINT AT THE COLUMN AND DRILLED PIER FOR EACH COLUMN.

DAMPPROOFING SHOULD BE APPLIED TO ANY PART OF THE COLUMN THAT IS BELOW THE GROUND LINE.

FOR TEMPORARY SPAN, REFER TO SHEETS S4-52 THRU S4-67. THE CONTRACTOR'S ATTENTION IS CALLED TO THE NEED FOR ANCHOR BOLT AND STEEL PIPE BLOCKOUTS TO BE INSTALLED IN THE CAP TO ACCOMODATE THE TEMPORARY SPAN. REFER TO SHEETS S4-58 THRU S4-61 AND S4-66 THRU S4-67.

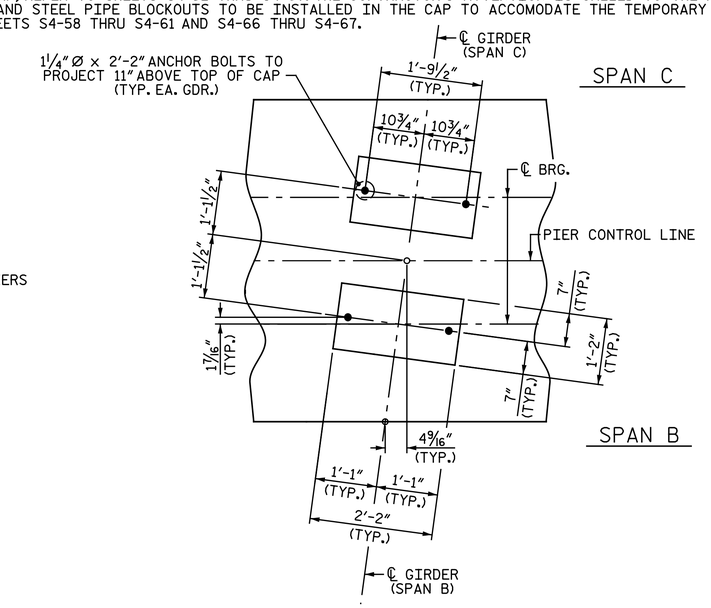

DETAIL A

ALL DIMENSIONS AND DETAILS ARE TYPICAL FOR ALL BEARINGS AT EACH GIRDER LOCATION

SEE "BEARING DETAILS" SHEET FOR BEARING ASSEMBLY DETAILS

PROJECT NO. U-3308

DURHAM COUNTY

STATION: 24+55.20 -LALT-
13+22.18 -CSXN-

SHEET 1 OF 3

NORTH CAROLINA PROFESSIONAL SEAL 25911 ENGINEER DURAN G. HATHAWAY

DocuSigned by: Duran Hathaway 2B37B0071CAD460...

5/3/2016

STATE OF NORTH CAROLINA
DEPARTMENT OF TRANSPORTATION
RALEIGH

SUBSTRUCTURE

PIER 2

Michael Baker INTERNATIONAL

Michael Baker Engineering
8000 Regency Parkway, Suite 600
Cary, North Carolina 276518
NC License No. : F-1084

REVISIONS							SHEET NO.
NO.	BY:	DATE:	NO.	BY:	DATE:		S4-35
1			3				TOTAL SHEETS
2			4				68

SITE 4

DRAWN BY : M. D. MAYHEW DATE : 5-9-14
CHECKED BY : S. A. DENNEY DATE : 5-27-14

cmayhew 9:37:18 AM
5/3/2016
Filename: Y:\Projects\NCDOT\U-3308\Structures\Dwgs\Final\404_035_U3308_SMU_P201.dgn

DocuSign Envelope ID: 34E2C66B-7797-4AB6-9BD3-31F0D6E698EB

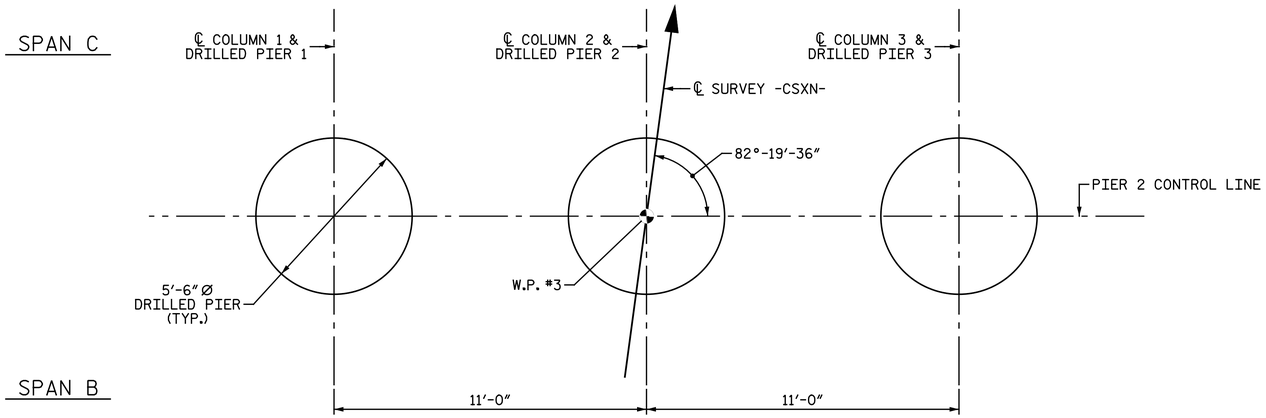

PLAN OF DRILLED PIERS

ALL DIMENSIONS AND DETAILS SHOWN FOR DRILLED PIERS ARE TYPICAL FOR EACH PIER UNLESS OTHERWISE NOTED.

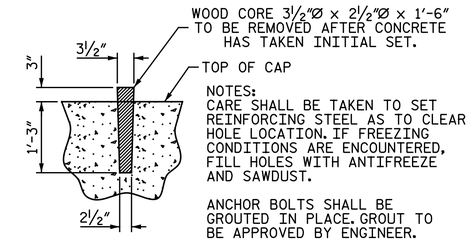

NOTES:
CARE SHALL BE TAKEN TO SET REINFORCING STEEL AS TO CLEAR HOLE LOCATION. IF FREEZING CONDITIONS ARE ENCOUNTERED, FILL HOLES WITH ANTIFREEZE AND SAWDUST.

ANCHOR BOLTS SHALL BE GROUTED IN PLACE. GROUT TO BE APPROVED BY ENGINEER.

DETAIL B

FOR LOCATION OF "DETAIL B", SEE SHEET 1 OF 3.

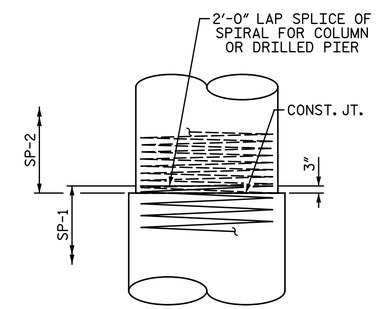

CONSTRUCTION JOINT DETAIL

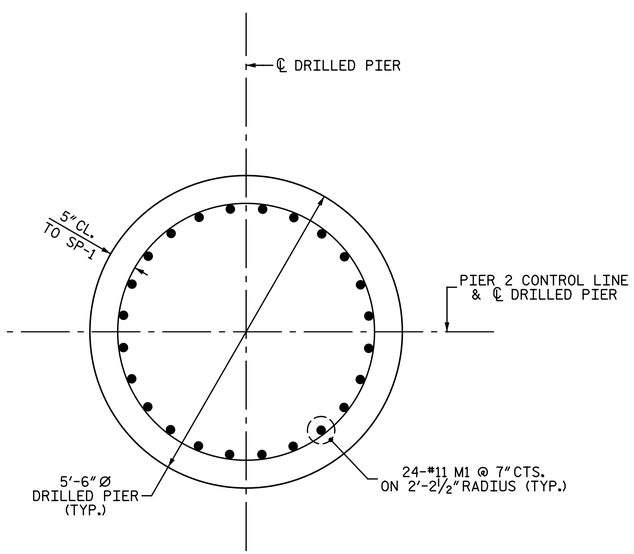

SECTION A-A

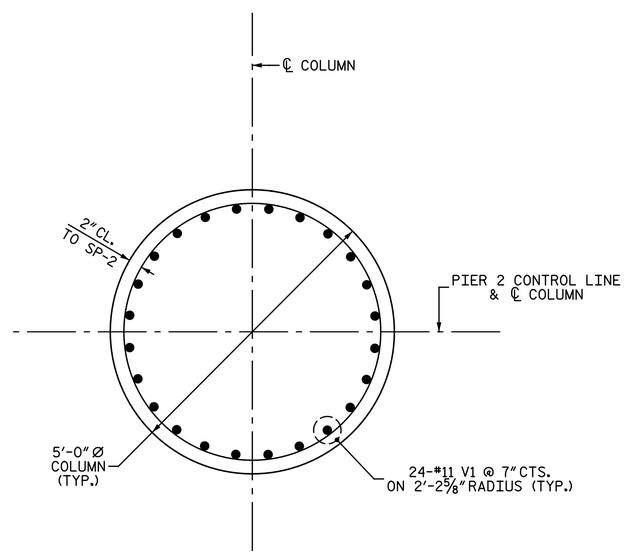

SECTION B-B

PROJECT NO. U-3308
DURHAM COUNTY
STATION: 24+55.20 -LALT-
13+22.18 -CSXN-
SHEET 2 OF 3

NORTH CAROLINA PROFESSIONAL SEAL 25911 ENGINEER DUWAIN G. HATHAWAY

DocuSigned by: Duwain Hathaway
2837B0071CAD460...
5/3/2016

Michael Baker INTERNATIONAL
Michael Baker Engineering
8000 Regency Parkway, Suite 800
Cary, North Carolina 27518
NC License No.: F-1084

STATE OF NORTH CAROLINA
DEPARTMENT OF TRANSPORTATION
RALEIGH
SUBSTRUCTURE

PIER 2 DETAILS

REVISIONS									SHEET NO.
NO.	BY:	DATE:	NO.	BY:	DATE:				S4-36
1			3						TOTAL SHEETS
2			4						68

DRAWN BY : M. D. MAYHEW DATE : 5-9-14
CHECKED BY : S. A. DENNEY DATE : 5-27-14

cmayhew 9:37:19 AM
5/3/2016
Filename: Y:\Projects\NCDOT\U-3308\Structures\Dwgs\Final\404_036_U3308_SMU_P202.dgn

SITE 4

DocuSign Envelope ID: 34E2C66B-7797-4AB6-9BD3-31F0D6E698EB

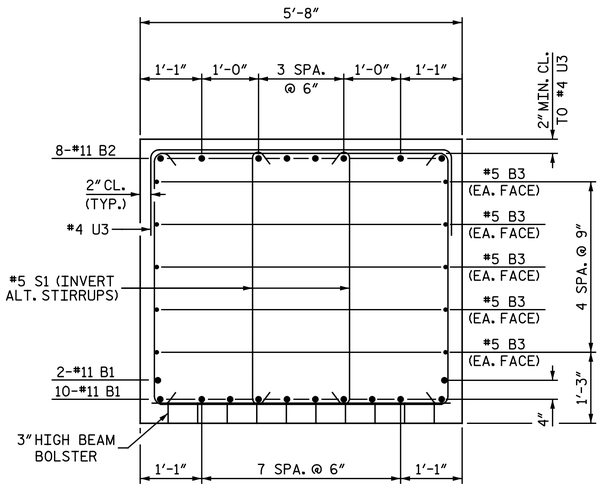

SECTION C-C

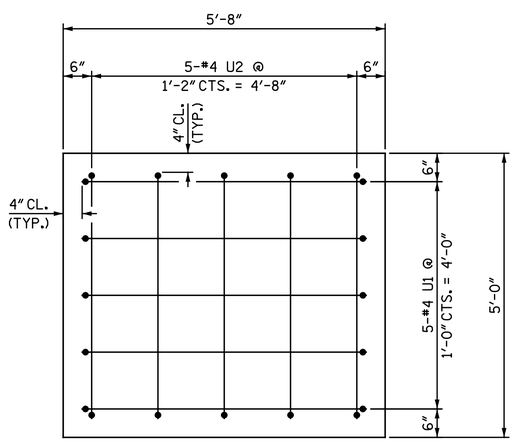

VIEW D-D

NOTES:

STIRRUPS IN CAP MAY BE SHIFTED AS NECESSARY TO CLEAR ANCHOR BOLTS.

HOOKS ON "V" BARS MAY BE TURNED AS NECESSARY FOR PLACING REINFORCING STEEL.

ALL STEEL IN THE DRILLED PIERS IS INCLUDED IN THE PAY ITEMS FOR "EPOXY COATED REINFORCING STEEL" AND "EPOXY COATED SPIRAL COLUMN REINFORCING STEEL".

THE CONTRACTORS ATTENTION IS CALLED TO THE FACT THAT THE LONGITUDINAL REINFORCEMENT FOR THE DRILLED PIERS IS DETAILED WITH 3 FEET OF EXTRA LENGTH.

FOR DRILLED PIERS, SEE SECTION 411 OF THE STANDARD SPECIFICATIONS.

FOR ADDITIONAL FOUNDATION NOTES, SEE "GENERAL DRAWING" SHEET 2 OF 5.

BAR TYPES

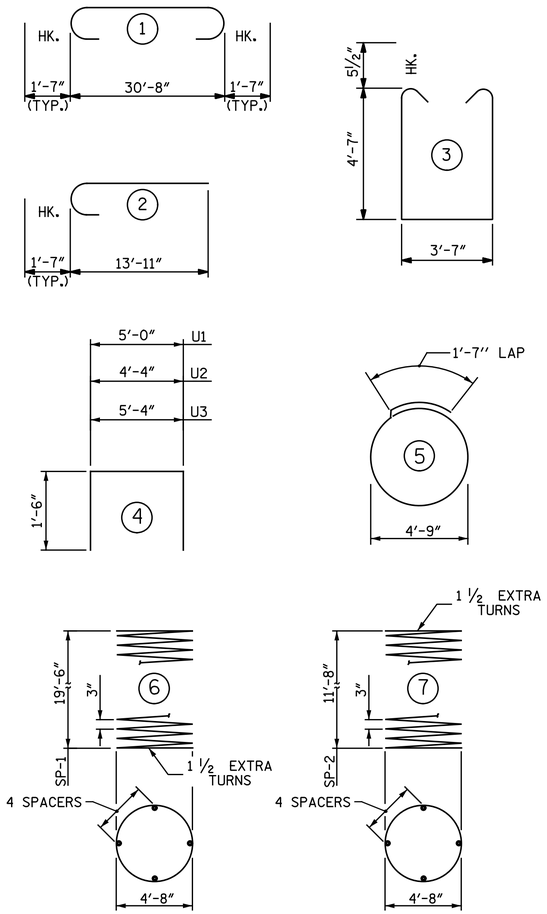

ALL BAR DIMENSIONS ARE OUT TO OUT.

BILL OF MATERIAL
PIER 2

BAR	NO.	SIZE	TYPE	LENGTH	WEIGHT
B1	12	11	STR	30' - 8"	1,955
B2	8	11	1	33' - 10"	1,438
B3	10	5	STR	30' - 8"	320
▲ M1	72	11	STR	33' - 7"	12,847
S1	40	5	3	13' - 8"	570
S2	21	5	5	16' - 7"	363
U1	10	4	4	8' - 0"	53
U2	10	4	4	7' - 4"	49
U3	61	4	4	8' - 4"	340
▲ V1	72	11	2	15' - 6"	5,929
▲ SP-1	3	✳	6	1152' - 8"	3,606
▲ SP-2	3	✳✳	7	700' - 0"	1,404

REINFORCING STEEL	LBS.	5,088
EPOXY COATED REINFORCING STEEL	LBS.	18,776
EPOXY COATED SPIRAL COLUMN REINF. STEEL	LBS.	5,010
CLASS "AA" CONCRETE BREAKDOWN		
POUR #2 COLUMN	C.Y.	24.9
POUR #3 CAP	C.Y.	32.5
TOTAL CLASS "AA" CONCRETE	C.Y.	57.4

DRILLED PIERS

5'-6" DIA. DRILLED PIERS IN SOIL		
DRILLED PIERS :	L.F.	24.0
5'-6" DIA. DRILLED PIERS NOT IN SOIL		
DRILLED PIERS :	L.F.	36.0
DRILLED PIER CONCRETE BREAKDOWN		
POUR #1 DRILLED PIERS	C.Y.	52.8
CSL TUBES	L.F.	322.5

✳ THE SP-1 SPIRAL REINFORCING STEEL SHALL BE W31 OR D-31 COLD DRAWN WIRE OR #5 PLAIN OR DEFORMED BAR.

✳✳ THE SP-2 SPIRAL REINFORCING STEEL SHALL BE W20 OR D-20 COLD DRAWN WIRE OR #4 PLAIN OR DEFORMED BAR.

▲ DENOTES EPOXY COATED REINFORCING STEEL

PROJECT NO. U-3308
DURHAM COUNTY
STATION: 24+55.20 -LALT-
13+22.18 -CSXN-

SHEET 3 OF 3

NORTH CAROLINA PROFESSIONAL SEAL 25911 ENGINEER DWAIN G. HATHAWAY

DocuSigned by: Dwain Hathaway
2837B0071DA0460...
5/3/2016

STATE OF NORTH CAROLINA
DEPARTMENT OF TRANSPORTATION
RALEIGH

SUBSTRUCTURE

PIER 2 DETAILS

Michael Baker INTERNATIONAL
Michael Baker Engineering
8000 Regency Parkway, Suite 600
Cary, North Carolina 276518
NC License No.: F-1084

REVISIONS								SHEET NO.
NO.	BY:	DATE:	NO.	BY:	DATE:			S4-37
1			3					TOTAL SHEETS
2			4					68

DRAWN BY : M. D. MAYHEW DATE : 5-9-14
CHECKED BY : S. A. DENNEY DATE : 5-27-14

cmayhew
5/3/2016 9:37:19 AM
Filename: Y:\Projects\NCDOT\U-3308\Structures\Dwgs\Final\404_037_U3308_SMU_P203.dgn

SITE 4

DocuSign Envelope ID: 34E2C66B-7797-4AB6-9BD3-31F0D6E698EB

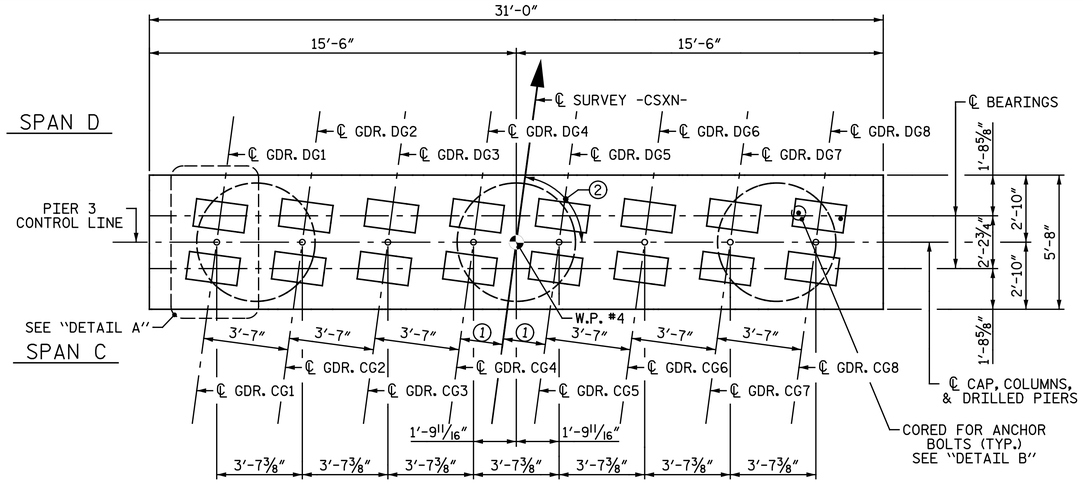

PLAN

① 1'-9 1/2"

② 82°-19'-36"

NOTES:

FOR "SECTION A-A", SEE SHEET 2 OF 3.

FOR "SECTION B-B", SEE SHEET 2 OF 3.

FOR "SECTION C-C", SEE SHEET 3 OF 3.

FOR "VIEW D-D", SEE SHEET 3 OF 3.

FOR "DETAIL B", SEE SHEET 2 OF 3.

SEE SHEET 3 OF 3 FOR ADDITIONAL NOTES AND DETAILS.

THE TOP SURFACE OF THE PIER CAPS SHALL BE CURED IN ACCORDANCE WITH THE STANDARD SPECIFICATIONS EXCEPT THE MEMBRANE CURING COMPOUND METHOD SHALL NOT BE USED.

THE LOCATION OF THE CONSTRUCTION JOINT IN THE DRILLED PIERS IS BASED ON AN APPROXIMATE GROUND LINE ELEVATION. IF THE CONSTRUCTION JOINT IS ABOVE THE ACTUAL GROUND ELEVATION, THE CONTRACTOR SHALL PLACE THE CONSTRUCTION JOINT 1 FOOT BELOW THE GROUND LINE.

METHOD A WATERPROOFING SHOULD BE APPLIED AROUND THE CONSTRUCTION JOINT AT THE COLUMN AND DRILLED PIER FOR EACH COLUMN.

DAMPPROOFING SHOULD BE APPLIED TO ANY PART OF THE COLUMN THAT IS BELOW THE GROUND LINE.

FOR TEMPORARY SPAN, REFER TO SHEETS S4-52 THRU S4-67. THE CONTRACTOR'S ATTENTION IS CALLED TO THE NEED FOR ANCHOR BOLT AND STEEL PIPE BLOCKOUTS TO BE INSTALLED IN THE CAP TO ACCOMODATE THE TEMPORARY SPAN. REFER TO SHEETS S4-58 THRU S4-61 AND S4-66 THRU S4-67.

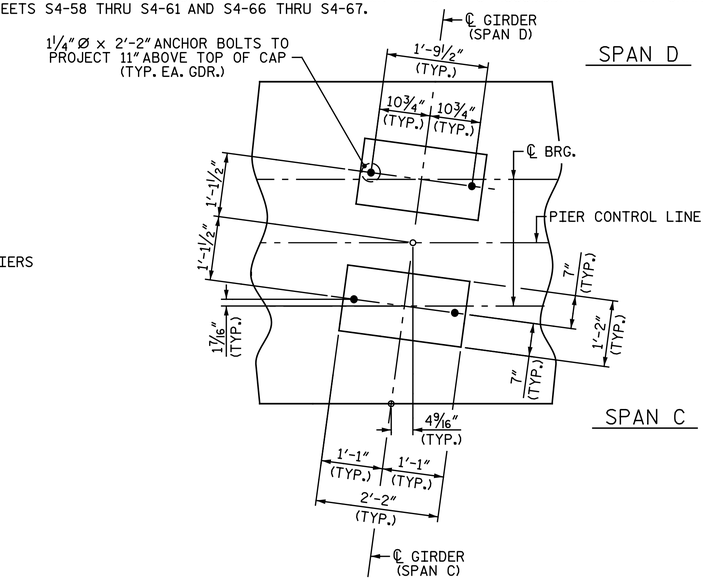

DETAIL A

ALL DIMENSIONS AND DETAILS ARE TYPICAL FOR ALL BEARINGS AT EACH GIRDER LOCATION

SEE "BEARING DETAILS" SHEET FOR BEARING ASSEMBLY DETAILS

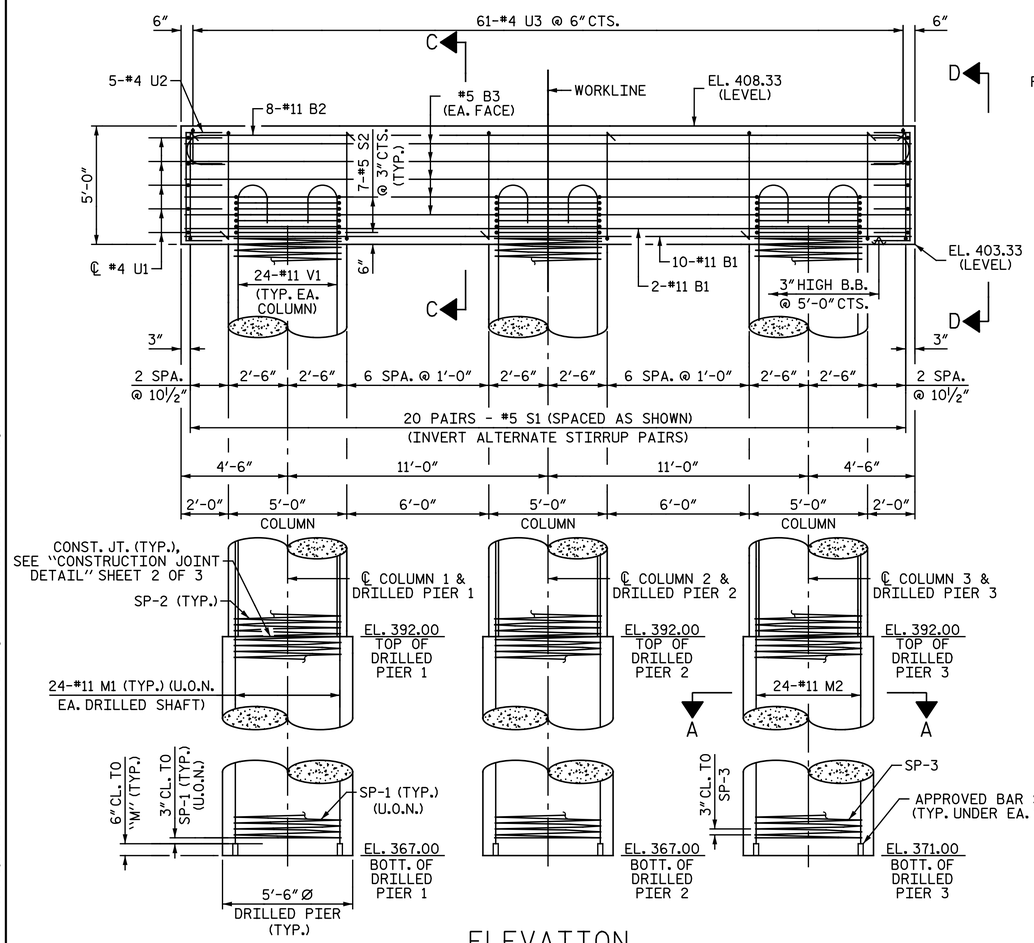

ELEVATION

ALL DIMENSIONS AND DETAILS SHOWN FOR DRILLED PIERS ARE TYPICAL FOR EACH PIER UNLESS OTHERWISE NOTED.

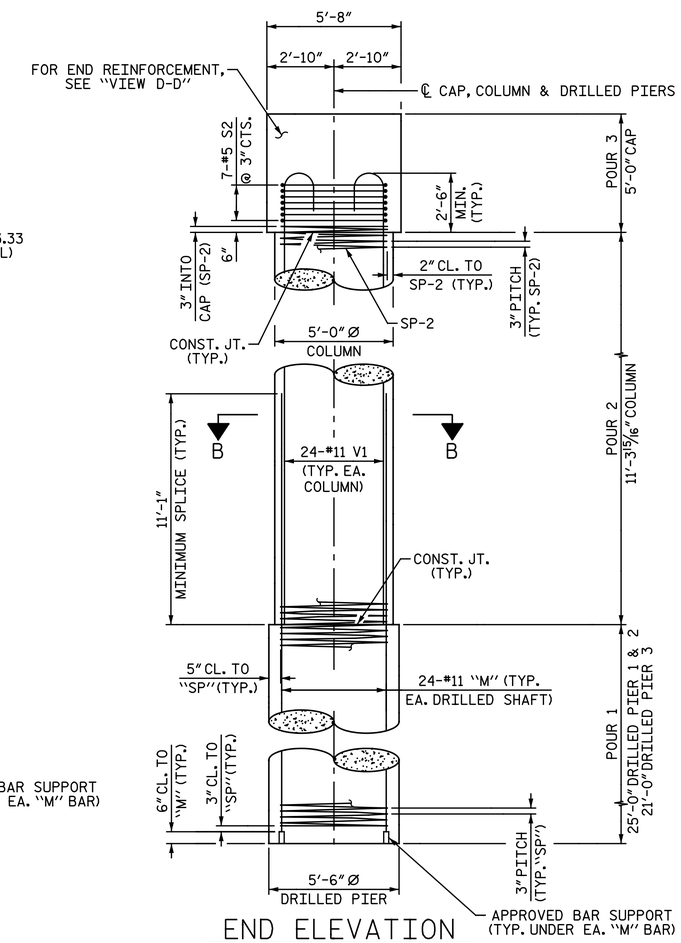

END ELEVATION

PROJECT NO. U-3308

DURHAM COUNTY

STATION: 24+55.20 -LALT-
13+22.18 -CSXN-

SHEET 1 OF 3

NORTH CAROLINA PROFESSIONAL SEAL 25911 ENGINEER DUWAIN G. HATHAWAY

Digitally signed by Duwain Hathaway
5/3/2016

STATE OF NORTH CAROLINA
DEPARTMENT OF TRANSPORTATION
RALEIGH

SUBSTRUCTURE

PIER 3

Michael Baker INTERNATIONAL

Michael Baker Engineering
8000 Regency Parkway, Suite 600
Cary, North Carolina 276518
NC License No.: F-1084

REVISIONS							SHEET NO.
NO.	BY:	DATE:	NO.	BY:	DATE:		S4-38
1			3				TOTAL SHEETS
2			4				68

DRAWN BY : M. D. MAYHEW DATE : 5-9-14
CHECKED BY : S. A. DENNEY DATE : 5-27-14

cmayhew 9:37:20 AM
5/3/2016
Filename: Y:\Projects\NCDOT\U-3308\Structures\Dwgs\Final\404_038_U3308_SMU_P301.dgn

SITE 4

DocuSign Envelope ID: 34E2C66B-7797-4AB6-9BD3-31F0D6E698EB

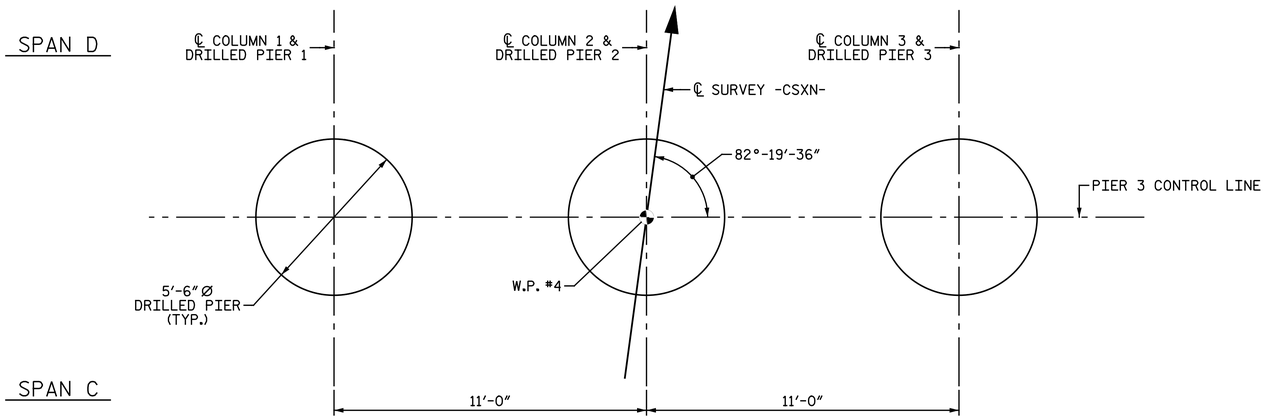

PLAN OF DRILLED PIERS

ALL DIMENSIONS AND DETAILS SHOWN FOR DRILLED PIERS ARE TYPICAL FOR EACH PIER UNLESS OTHERWISE NOTED.

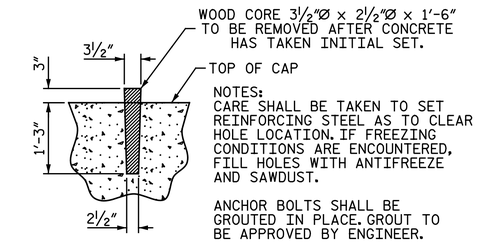

DETAIL B

FOR LOCATION OF "DETAIL B", SEE SHEET 1 OF 3.

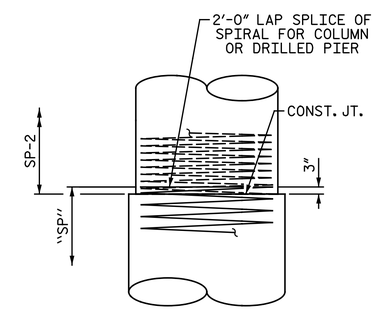

CONSTRUCTION JOINT DETAIL

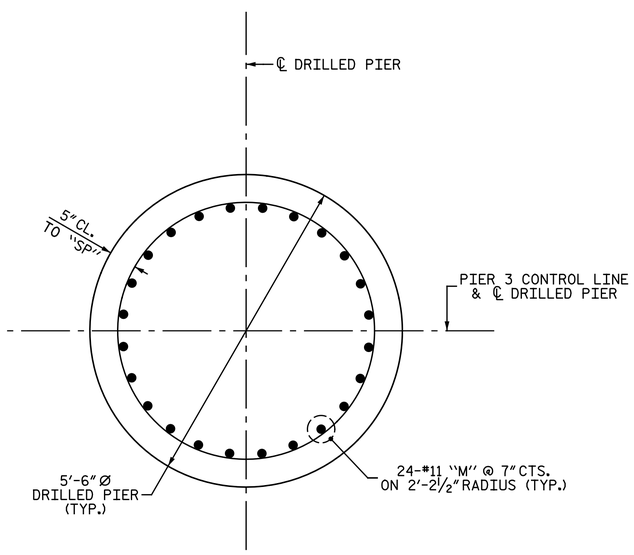

SECTION A-A

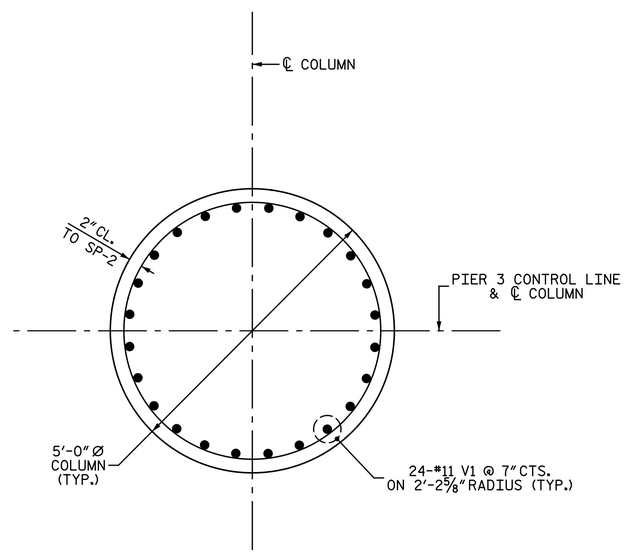

SECTION B-B

PROJECT NO. U-3308

DURHAM COUNTY

STATION: 24+55.20 -LALT-
13+22.18 -CSXN-

SHEET 2 OF 3

NORTH CAROLINA PROFESSIONAL SEAL 25911 ENGINEER DUAIN G. HATHAWAY

DocuSigned by: Duain Hathaway 2E07BD7104D4401...

5/3/2016

STATE OF NORTH CAROLINA
DEPARTMENT OF TRANSPORTATION
RALEIGH

SUBSTRUCTURE

PIER 3 DETAILS

Michael Baker INTERNATIONAL

Michael Baker Engineering
8000 Regency Parkway, Suite 600
Cary, North Carolina 27518
NC License No.: F-1084

REVISIONS							SHEET NO.
NO.	BY:	DATE:	NO.	BY:	DATE:		S4-39
1			3				TOTAL SHEETS
2			4				68

DRAWN BY : M. D. MAYHEW DATE : 5-9-14
CHECKED BY : S. A. DENNEY DATE : 5-27-14

cmayhew 5/3/2016 9:37:21 AM
Filename: Y:\Projects\NCDOT\U-3308\Structures\Dwgs\Find\404_039_U3308_SMU_P302.dgn

SITE 4

DocuSign Envelope ID: 34E2C66B-7797-4AB6-9BD3-31F0D6E698EB

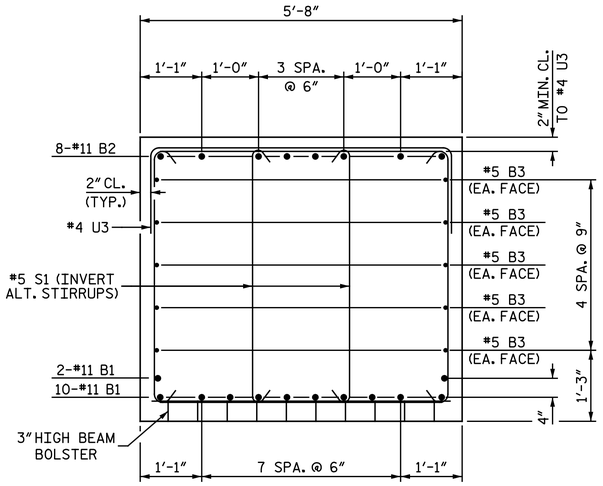

SECTION C-C

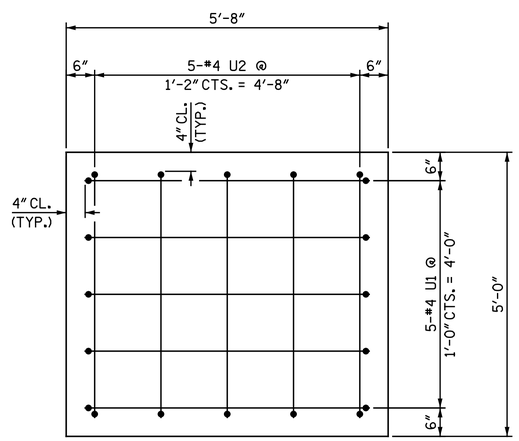

VIEW D-D

NOTES:

STIRRUPS IN CAP MAY BE SHIFTED AS NECESSARY TO CLEAR ANCHOR BOLTS.

HOOKS ON "V" BARS MAY BE TURNED AS NECESSARY FOR PLACING REINFORCING STEEL.

ALL STEEL IN THE DRILLED PIERS IS INCLUDED IN THE PAY ITEMS FOR "EPOXY COATED REINFORCING STEEL" AND "EPOXY COATED SPIRAL COLUMN REINFORCING STEEL".

THE CONTRACTORS ATTENTION IS CALLED TO THE FACT THAT THE LONGITUDINAL REINFORCEMENT FOR THE DRILLED PIERS IS DETAILED WITH 3 FEET OF EXTRA LENGTH.

FOR DRILLED PIERS, SEE SECTION 411 OF THE STANDARD SPECIFICATIONS.

FOR ADDITIONAL FOUNDATION NOTES, SEE "GENERAL DRAWING" SHEET 2 OF 5.

BAR TYPES

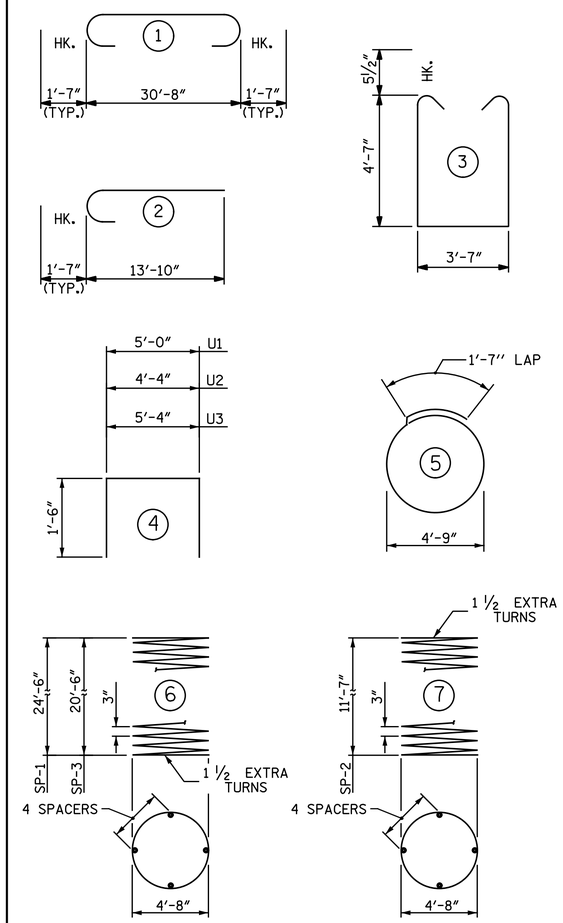

ALL BAR DIMENSIONS ARE OUT TO OUT.

BILL OF MATERIAL
PIER 3

BAR	NO.	SIZE	TYPE	LENGTH	WEIGHT
B1	12	11	STR	30' - 8"	1,955
B2	8	11	1	33' - 10"	1,438
B3	10	5	STR	30' - 8"	320
▲ M1	48	11	STR	38' - 7"	9,840
▲ M2	24	11	STR	34' - 7"	4,410
S1	40	5	3	13' - 8"	570
S2	21	5	5	16' - 7"	363
U1	10	4	4	8' - 0"	53
U2	10	4	4	7' - 4"	49
U3	61	4	4	8' - 4"	340
▲ V1	72	11	2	15' - 5"	5,897
▲ SP-1	2	✳	6	1442' - 8"	3,010
▲ SP-2	3	✳✳	7	695' - 1"	1,392
▲ SP-3	1	✳	6	1210' - 8"	1,263

REINFORCING STEEL	LBS.	5,088
EPOXY COATED REINFORCING STEEL	LBS.	20,147
EPOXY COATED SPIRAL COLUMN REINF. STEEL	LBS.	5,665
CLASS "AA" CONCRETE BREAKDOWN		
POUR #2 COLUMN	C.Y.	24.7
POUR #3 CAP	C.Y.	32.5
TOTAL CLASS "AA" CONCRETE	C.Y.	57.2

DRILLED PIERS

5'-6" DIA. DRILLED PIERS IN SOIL		
DRILLED PIERS :	L.F.	45.0
5'-6" DIA. DRILLED PIERS NOT IN SOIL		
DRILLED PIERS :	L.F.	26.0
DRILLED PIER CONCRETE BREAKDOWN		
POUR #1 DRILLED PIERS	C.Y.	62.5
CSL TUBES	L.F.	377.5

✳ THE SP-1 SPIRAL REINFORCING STEEL SHALL BE W31 OR D-31 COLD DRAWN WIRE OR #5 PLAIN OR DEFORMED BAR.

✳✳ THE SP-2 SPIRAL REINFORCING STEEL SHALL BE W20 OR D-20 COLD DRAWN WIRE OR #4 PLAIN OR DEFORMED BAR.

▲ DENOTES EPOXY COATED REINFORCING STEEL

PROJECT NO. U-3308
DURHAM COUNTY
STATION: 24+55.20 -LALT-
13+22.18 -CSXN-

SHEET 3 OF 3

NORTH CAROLINA PROFESSIONAL SEAL 25911 ENGINEER DWAIN G. HATHAWAY

DocuSigned by: Dwain Hathaway 283786071CA0460...
5/3/2016

Michael Baker INTERNATIONAL
Michael Baker Engineering
8000 Regency Parkway, Suite 800
Cary, North Carolina 276518
NC License No.: F-1084

STATE OF NORTH CAROLINA
DEPARTMENT OF TRANSPORTATION
RALEIGH
SUBSTRUCTURE

PIER 3 DETAILS

REVISIONS							
NO.	BY:	DATE:	NO.	BY:	DATE:	SHEET NO. S4-40
1			3			TOTAL SHEETS
2			4			68

DRAWN BY : M. D. MAYHEW DATE : 5-9-14
CHECKED BY : S. A. DENNEY DATE : 5-27-14

cmayhew 9:37:22 AM
5/3/2016
Filename: Y:\Projects\NCDOT\U-3308\Structures\Dwgs\Final\404_040_U3308_SMU_P303.dgn

SITE 4

DocuSign Envelope ID: 34E2C66B-7797-4AB6-9BD3-31F0D6E698EB

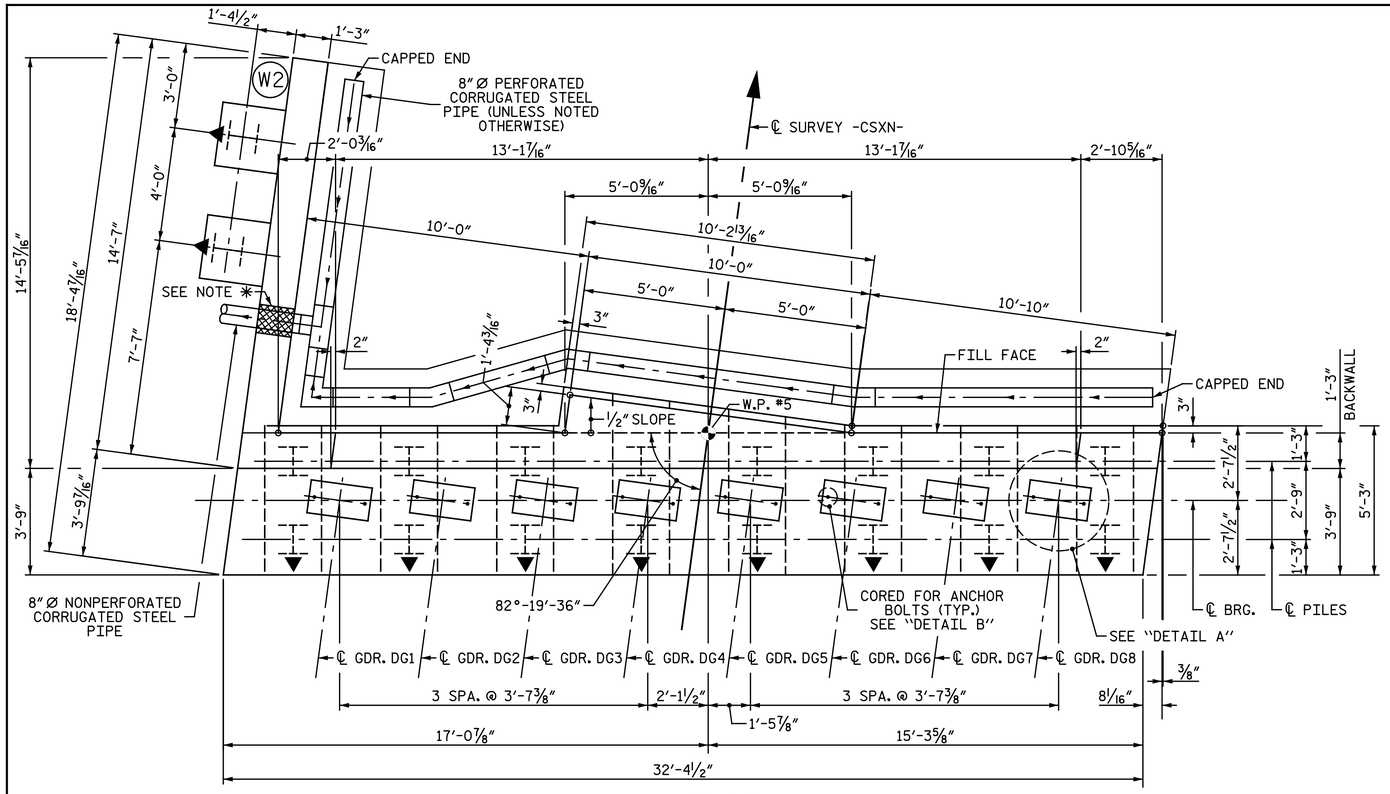

PLAN

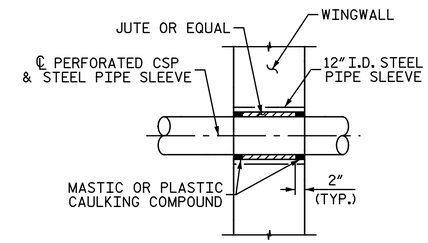

SECTION THRU WING

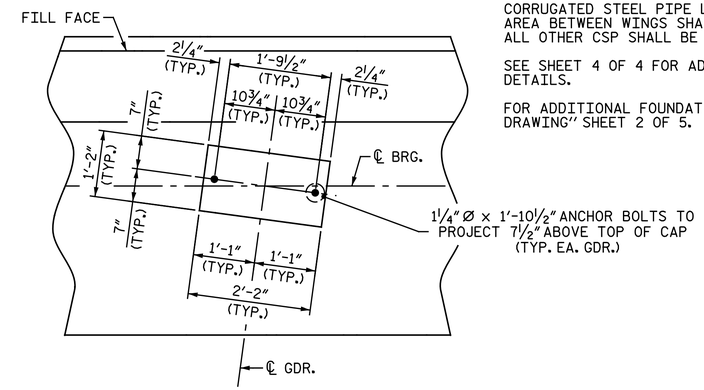

DETAIL A

NOTES:

FOR "SECTION A-A", SEE SHEET 4 OF 4.

▲ DENOTES DIRECTION OF 3:12 BATTER.

✳ 12"Ø I.D. STEEL PIPE SLEEVE (3/8" WALL THICKNESS) TO BE FLUSH WITH BOTH FACES OF WING. FIELD BEND REINFORCING STEEL AS NECESSARY TO PROVIDE FOR SLEEVE. SEE "SECTION THRU WING" FOR DETAILS. INSTALL CSP WITH A MINMUM OF 1/8"/1' SLOPE.

STIRRUPS IN CAP MAY BE SHIFTED AS NECESSARY TO CLEAR ANCHOR BOLTS.

PAYMENT FOR PIPE SLEEVE INSERT CONSIDERED INCIDENTAL TO THE CONSTRUCTION OF THE ABUTMENT.

DAMPPROOFING LIMITS: BACK OF BACKWALL, BACK OF ABUTMENT SEAT, AND BACK OF WINGWALLS.

FOR PIPE SLEEVE INSERTS, SEE SPECIAL PROVISIONS FOR STRUCTURE DRAINAGE SYSTEM.

CORRUGATED STEEL PIPE LOCATED IN DRAINAGE AREA BETWEEN WINGS SHALL BE PERFORATED. ALL OTHER CSP SHALL BE NON-PERFORATED.

SEE SHEET 4 OF 4 FOR ADDITIONAL NOTES AND DETAILS.

FOR ADDITIONAL FOUNDATION NOTES, SEE "GENERAL DRAWING" SHEET 2 OF 5.

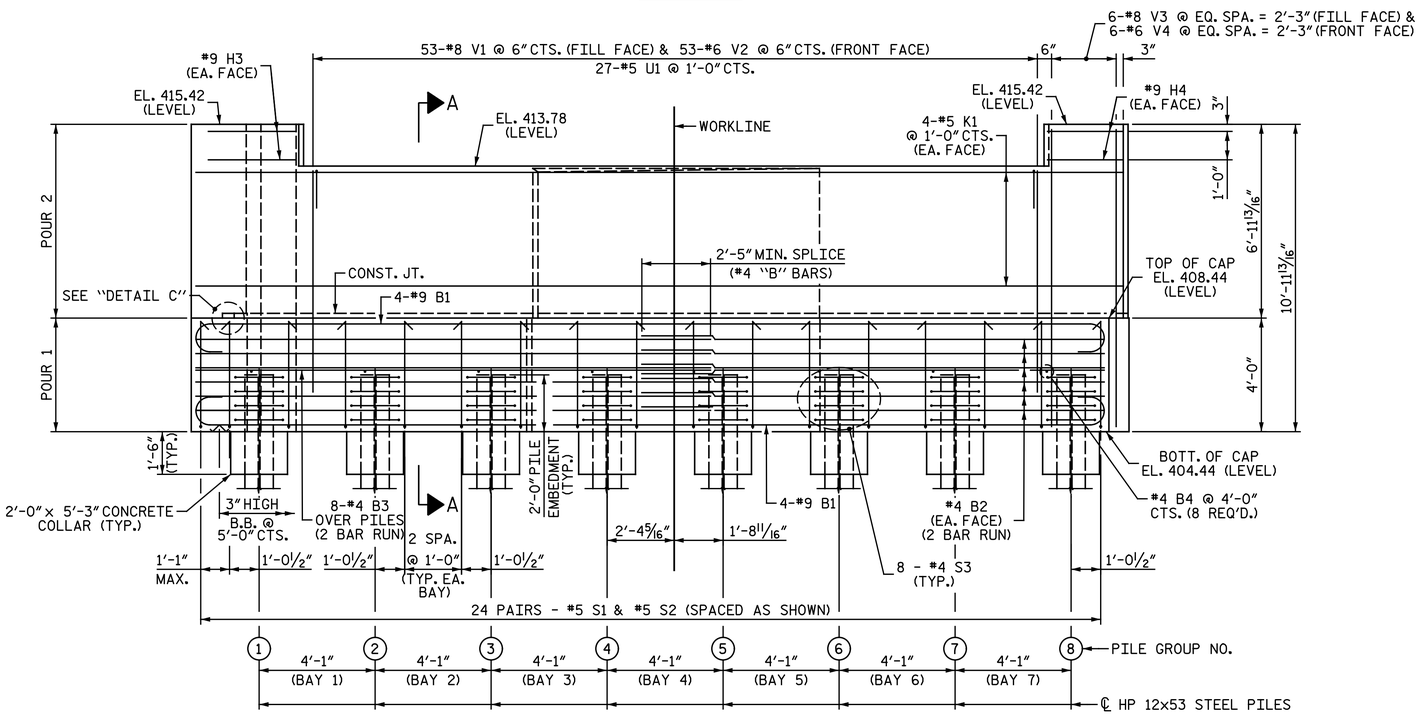

ELEVATION

8"Ø PERFORATED CORRUGATED PIPE DRAIN NOT SHOWN FOR CLARITY.

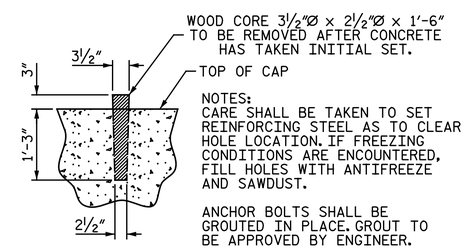

NOTES:
CARE SHALL BE TAKEN TO SET REINFORCING STEEL AS TO CLEAR HOLE LOCATION. IF FREEZING CONDITIONS ARE ENCOUNTERED, FILL HOLES WITH ANTIFREEZE AND SAWDUST.

ANCHOR BOLTS SHALL BE GROUTED IN PLACE. GROUT TO BE APPROVED BY ENGINEER.

DETAIL B

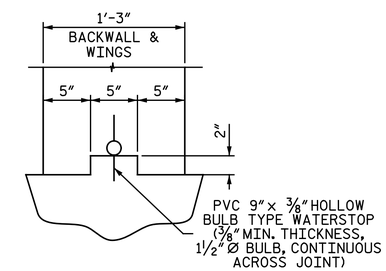

DETAIL C

PROJECT NO. U-3308
DURHAM COUNTY
STATION: 24+55.20 -LALT-
13+22.18 -CSXN-

SHEET 1 OF 4

DRAWN BY : M. D. MAYHEW DATE : 2-21-14
CHECKED BY : S. A. DENNEY DATE : 3-13-14

NORTH CAROLINA PROFESSIONAL SEAL 25911 ENGINEER DUSTIN G. HATHAWAY

Dustin Hathaway
5/3/2016

Michael Baker INTERNATIONAL
Michael Baker Engineering
8000 Regency Parkway, Suite 600
Cary, North Carolina 27518
NC License No.: F-1084

STATE OF NORTH CAROLINA
DEPARTMENT OF TRANSPORTATION
RALEIGH

SUBSTRUCTURE

ABUTMENT 2

REVISIONS								
NO.	BY:	DATE:	NO.	BY:	DATE:			
1			3					
2			4					

SHEET NO. S4-41
TOTAL SHEETS 68

SITE 4

mayhew 9:37:23 AM
5/3/2016 Filename: Y:\Projects\NCDOT\U-3308\Structures\Dwgs\Final\404_041_U3308_SMU_AB201.dgn

DocuSign Envelope ID: 34E2C66B-7797-4AB6-9BD3-31F0D6E698EB

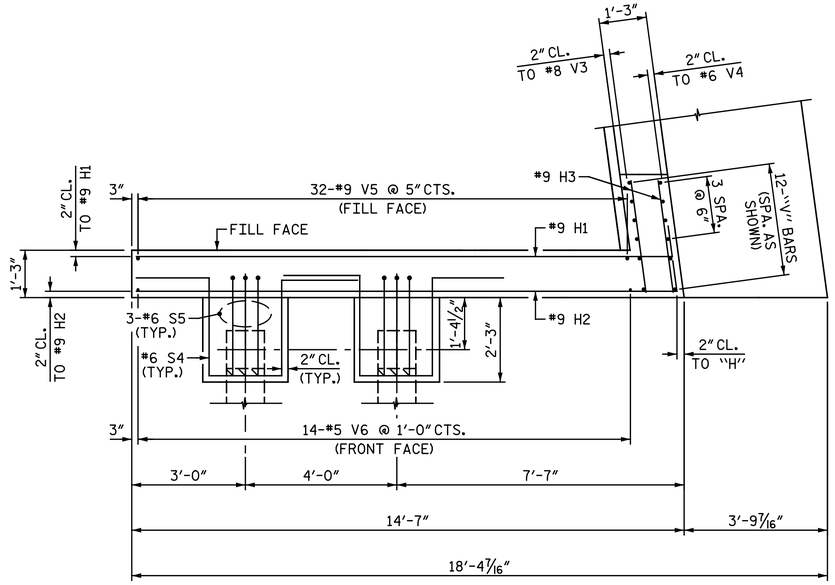

PLAN OF WING WALL (W2)

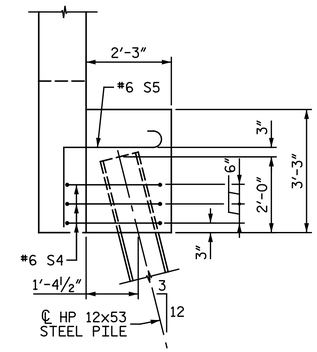

SECTION B-B

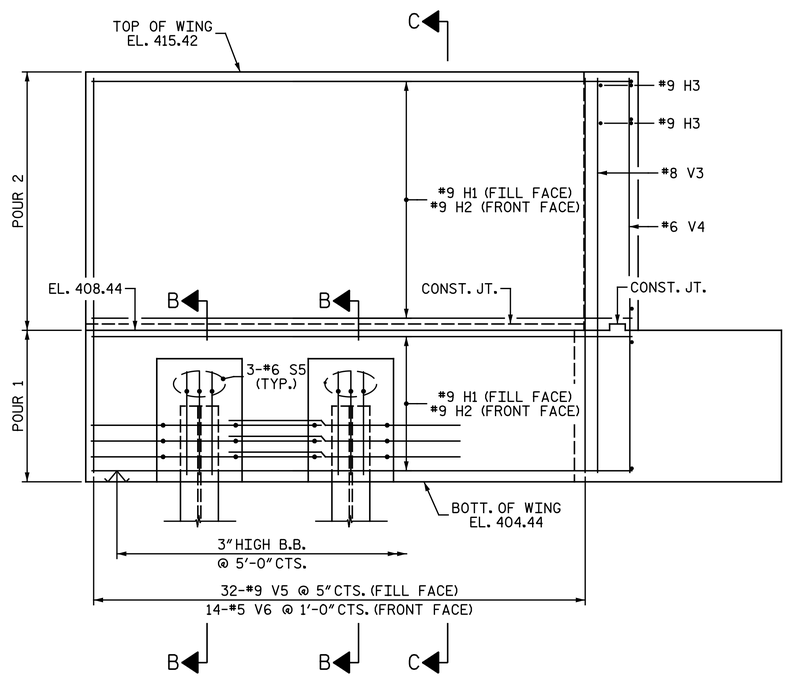

ELEVATION OF WING WALL (W2)

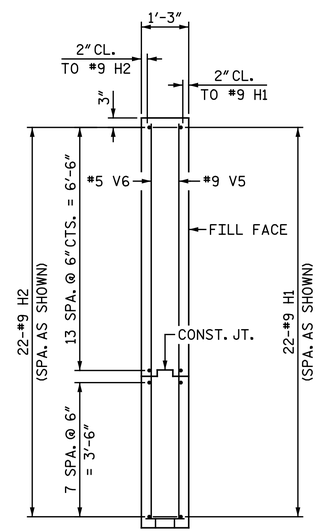

SECTION C-C

PROJECT NO. U-3308

DURHAM COUNTY

STATION: 24+55.20 -LALT-
13+22.18 -CSXN-

SHEET 2 OF 4

STATE OF NORTH CAROLINA
DEPARTMENT OF TRANSPORTATION
RALEIGH

SUBSTRUCTURE

ABUTMENT 2

NORTH CAROLINA PROFESSIONAL SEAL 25911 ENGINEER DWAIN G. HATHAWAY

DocuSigned by: Dwain Hathaway 2837B0071DA0460...

5/3/2016

Michael Baker INTERNATIONAL

Michael Baker Engineering
8000 Regency Parkway, Suite 600
Cary, North Carolina 27518
NC License No.: F-1084

REVISIONS						
NO.	BY:	DATE:	NO.	BY:	DATE:	
1			3			
2			4			

SHEET NO. S4-42

TOTAL SHEETS 68

DRAWN BY : M. D. MAYHEW DATE : 3-6-14
CHECKED BY : S. A. DENNEY DATE : 3-13-14

cmayhew
5/3/2016 9:37:23 AM
Filename: Y:\Projects\NCDOT\U-3308\Structures\Dwgs\Final\404_042_U3308_SMU_AB202.dgn

SITE 4

DocuSign Envelope ID: 34E2C66B-7797-4AB6-9BD3-31F0D6E698EB

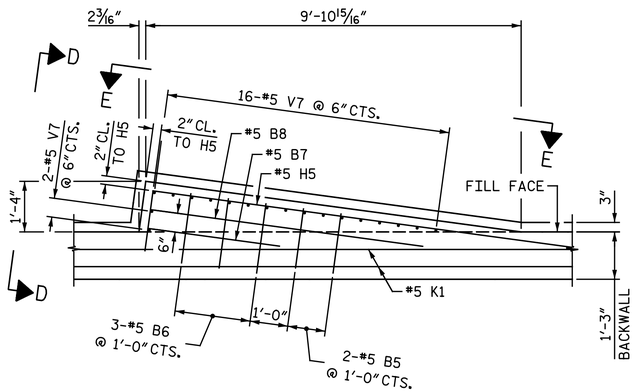

PLAN - BACKWALL EXTENSION DETAIL

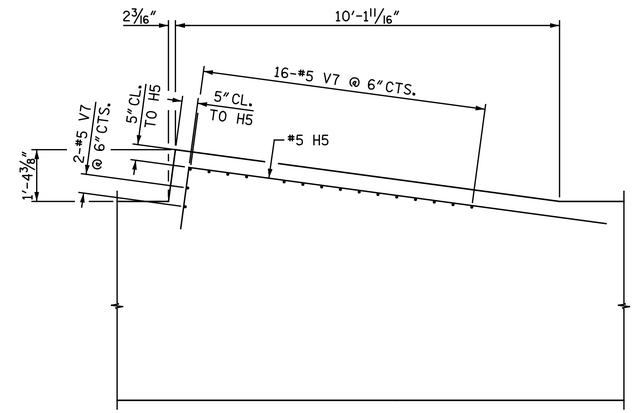

PLAN - CAP EXTENSION DETAIL

NOTE: BACKWALL NOT SHOWN FOR CLARITY

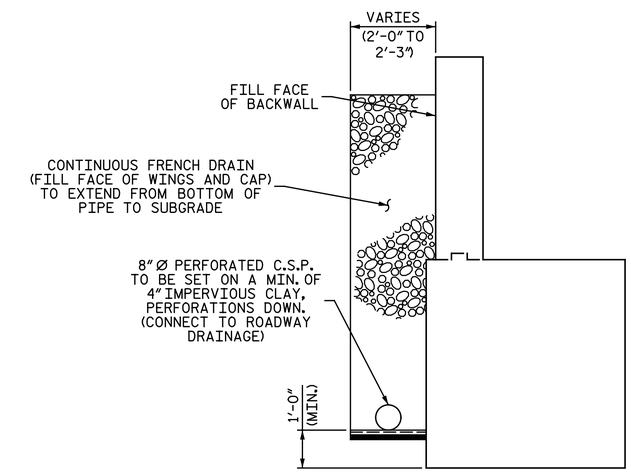

DRAINAGE AT ABUTMENT 2

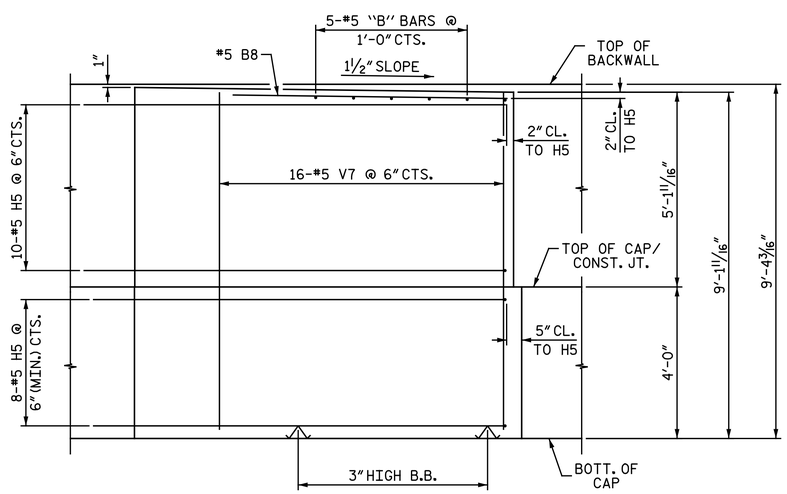

VIEW E-E

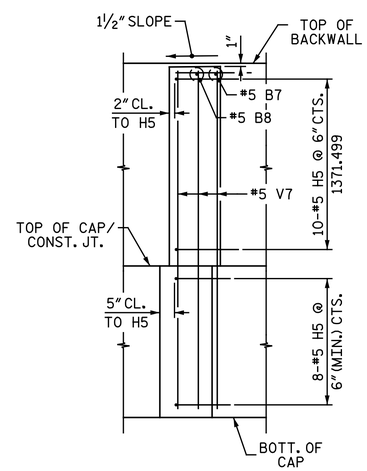

VIEW D-D

PROJECT NO. U-3308

DURHAM COUNTY

STATION: 24+55.20 -LALT-
13+22.18 -CSXN-

SHEET 3 OF 4

NORTH CAROLINA PROFESSIONAL SEAL 25911 ENGINEER DWAIN C. HATHAWAY

Docusigned by: Dwain Hathaway 2837B6C71DA0460...

5/3/2016

Michael Baker INTERNATIONAL

Michael Baker Engineering
8000 Regency Parkway, Suite 600
Cary, North Carolina 27518
NC License No.: F-1084

STATE OF NORTH CAROLINA
DEPARTMENT OF TRANSPORTATION
RALEIGH

SUBSTRUCTURE

ABUTMENT 2

REVISIONS							SHEET NO.
NO.	BY:	DATE:	NO.	BY:	DATE:		S4-43
1			3				TOTAL SHEETS
2			4				68

SITE 4

DRAWN BY : M. D. MAYHEW DATE : 3-6-14
CHECKED BY : S. A. DENNEY DATE : 3-13-14

amayhew
5/3/2016 9:37:24 AM
Filename: Y:\Projects\NCDOT\U-3308\Structures\Dwgs\Final\404_043_U3308_SMU_A8203.dgn

DocuSign Envelope ID: 34E2C66B-7797-4AB6-9BD3-31F0D6E698EB

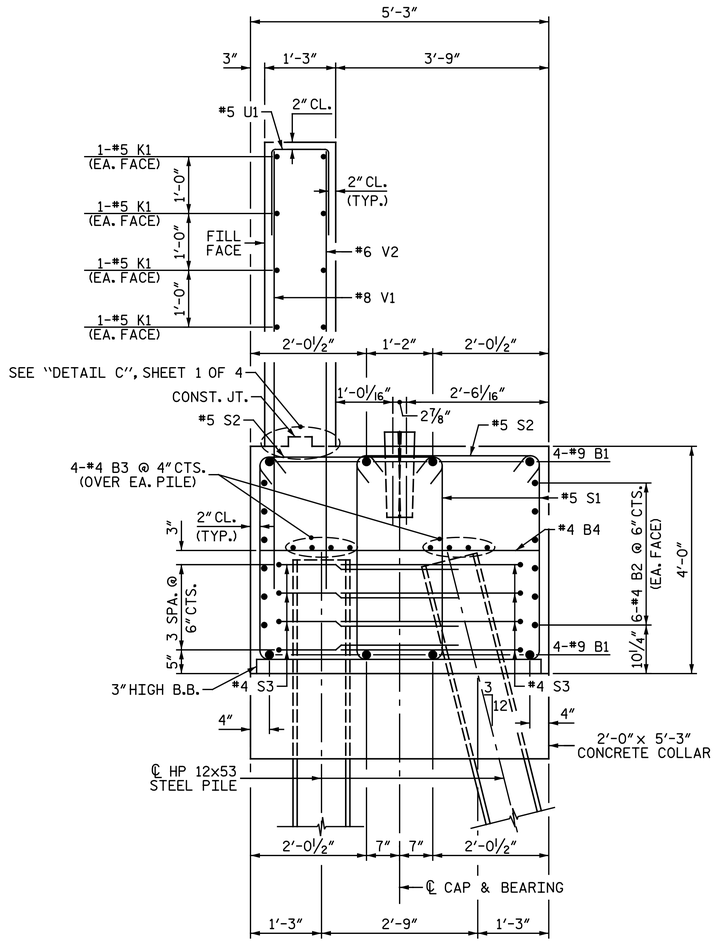

SECTION A-A

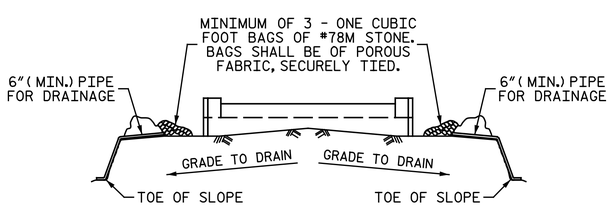

BAGGED STONE AND PIPE SHALL BE PLACED IMMEDIATELY AFTER COMPLETION OF END BENT EXCAVATION. PIPE MAY BE EITHER CONCRETE, CORRUGATED STEEL, CORRUGATED ALUMINUM ALLOY, OR CORRUGATED PLASTIC. PERFORATED PIPE WILL NOT BE ALLOWED.

BAGGED STONE SHALL REMAIN IN PLACE UNTIL THE ENGINEER DIRECTS THAT IT BE REMOVED. THE CONTRACTOR SHALL REMOVE AND DISPOSE OF SILT ACCUMULATIONS AT BAGGED STONE WHEN SO DIRECTED BY THE ENGINEER. BAGS SHALL BE REMOVED AND REPLACED WHENEVER THE ENGINEER DETERMINES THAT THEY HAVE DETERIORATED AND LOST THEIR EFFECTIVENESS.

NO SEPARATE PAYMENT WILL BE MADE FOR THIS WORK AND THE ENTIRE COST OF THIS WORK SHALL BE INCLUDED IN THE UNIT CONTRACT PRICE BID FOR THE SEVERAL PAY ITEMS.

TEMPORARY DRAINAGE AT ABUTMENT

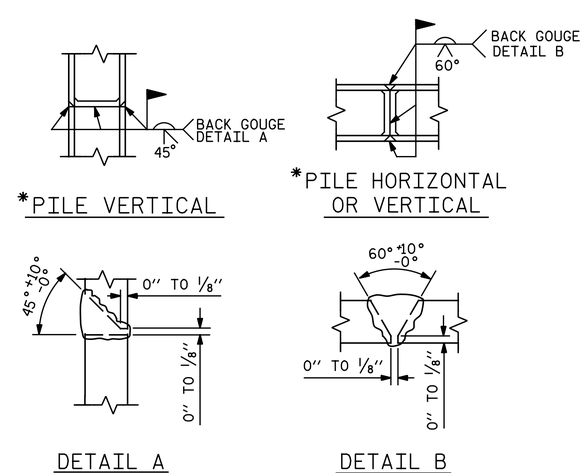

PILE SPLICE DETAILS

*POSITION OF PILE DURING WELDING.

BAR TYPES

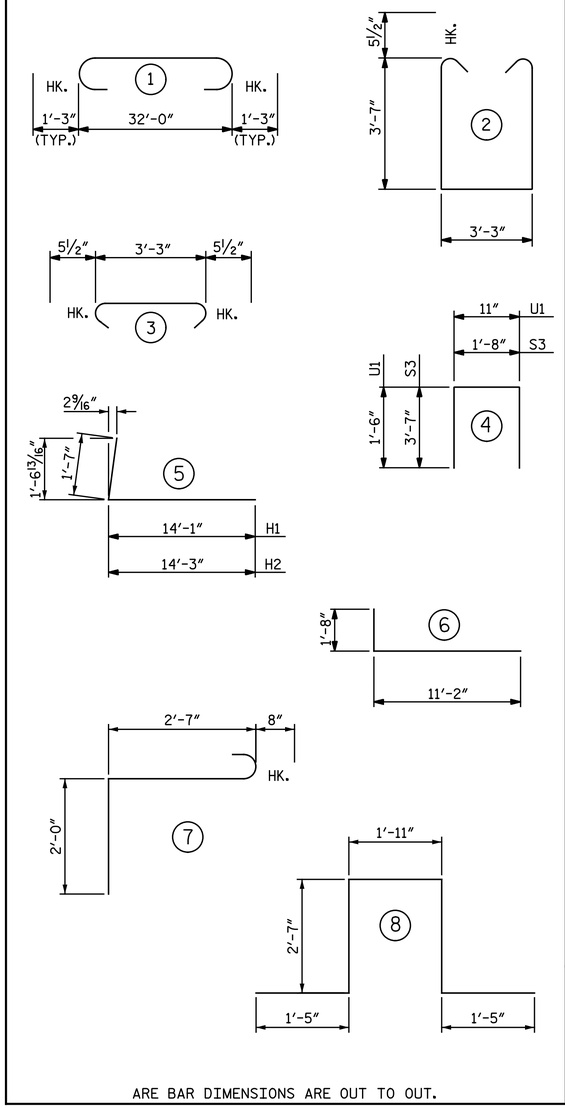

ARE BAR DIMENSIONS ARE OUT TO OUT.

NOTES:

BACKWALL SHALL BE PLACED BEFORE APPLYING EPOXY PROTECTIVE COATING.

THE TOP SURFACE AREAS OF THE ABUTMENT CAPS SHALL BE CURED IN ACCORDANCE WITH THE STANDARD SPECIFICATIONS EXCEPT THE MEMBRANE CURING COMPOUND METHOD SHALL NOT BE USED.

BILL OF MATERIAL ABUTMENT 2

BAR	NO.	SIZE	TYPE	LENGTH	WEIGHT
B1	8	9	1	34' - 6"	938
B2	24	4	STR	17' - 3"	277
B3	32	4	STR	17' - 3"	369
B4	8	4	STR	4' - 11"	26
B5	2	5	STR	1' - 6"	3
B6	3	5	STR	1' - 10"	6
B7	1	5	STR	3' - 6"	4
B8	1	5	STR	7' - 3"	8
H1	22	9	5	15' - 8"	1,172
H2	22	9	5	15' - 10"	1,184
H3	4	9	STR	2' - 11"	40
H4	4	9	STR	2' - 6"	34
H5	18	5	6	12' - 10"	241
K1	8	5	STR	32' - 0"	267
S1	48	5	2	11' - 4"	567
S2	48	5	3	4' - 2"	209
S3	64	4	4	8' - 10"	378
S4	6	6	8	9' - 11"	89
S5	6	6	7	5' - 3"	47
U1	27	5	4	3' - 11"	110
V1	53	8	STR	8' - 11"	1,262
V2	53	6	STR	8' - 11"	710
V3	12	8	STR	10' - 6"	336
V4	12	6	STR	10' - 6"	189
V5	32	9	STR	10' - 6"	1,142
V6	14	5	STR	10' - 6"	153
V7	18	5	STR	8' - 8"	163

REINFORCING STEEL LBS. 9,924

CLASS "AA" CONCRETE BREAKDOWN

POUR #1 CAP, LOWER WING WALLS & CONC. COLLAR	C.Y.	34.8
POUR #2 BACKWALL & UPPER WING WALLS	C.Y.	13.9
TOTAL CLASS "AA" CONCRETE	C.Y.	48.7

HP 12x53 STEEL PILES

NO. 18 LIN. FT. 540

PROJECT NO. U-3308

DURHAM COUNTY

STATION: 24+55.20 -LALT- / 13+22.18 -CSXN-

SHEET 4 OF 4

STATE OF NORTH CAROLINA
DEPARTMENT OF TRANSPORTATION
RALEIGH

SUBSTRUCTURE

ABUTMENT 2

NORTH CAROLINA PROFESSIONAL SEAL 25911 ENGINEER DWAIN G. HATHAWAY

DocuSigned by: Dwain Hathaway 283786071DA0460...

5/3/2016

Michael Baker INTERNATIONAL

Michael Baker Engineering
8000 Regency Parkway, Suite 600
Cary, North Carolina 276518
NC License No.: F-1084

REVISIONS								SHEET NO.
NO.	BY:	DATE:	NO.	BY:	DATE:			S4-44
1			3					TOTAL SHEETS
2			4					68

DRAWN BY : M. D. MAYHEW DATE : 3-6-14
CHECKED BY : S. A. DENNEY DATE : 3-13-14

cmayhew 5/3/2016 9:37:24 AM
Filename: Y:\Projects\NCDOT\U-3308\Structures\Dwgs\Final\404_044_U3308_SMU_AB204.dgn

SITE 4

DocuSign Envelope ID: 34E2C66B-7797-4AB6-9BD3-31F0D6E698EB

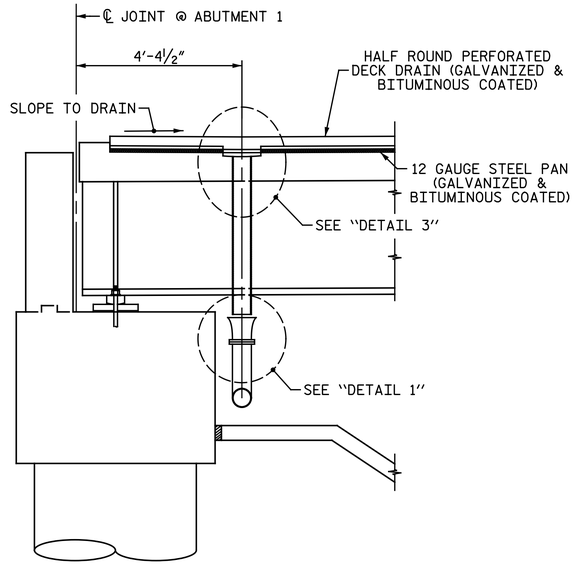

ABUTMENT 1

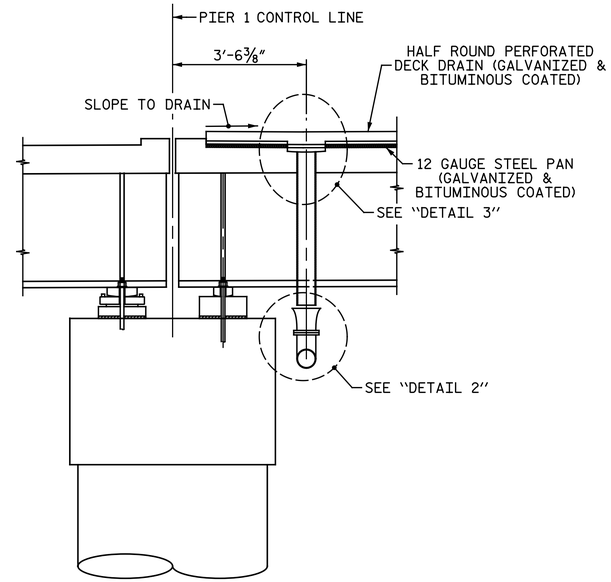

PIER 1

DRAINAGE DETAILS

NOTES:

ALL DIMENSIONS ARE SUBJECT TO ADJUSTMENTS TO FIT MEASUREMENTS TAKEN AFTER DECKS HAVE BEEN POURED.

D.I. = DUCTILE IRON

6"Ø VERTICAL DECK DRAINS SHALL NOT BE RIGIDLY JOINED TO 6" FLANGE AND FLARE. SEE "DETAIL 1" AND "DETAIL 2" ON THIS SHEET.

FOR "DETAIL 3", SEE SHEET 2 OF 7.

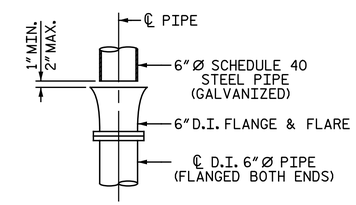

DETAIL 1

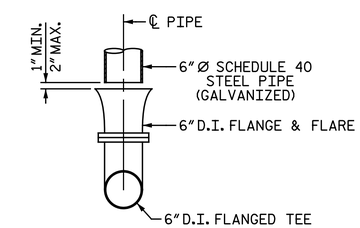

DETAIL 2

NOTE: CENTERLINE OF PIPE AND FLANGE AND FLARE LINE UP AT 60° F.

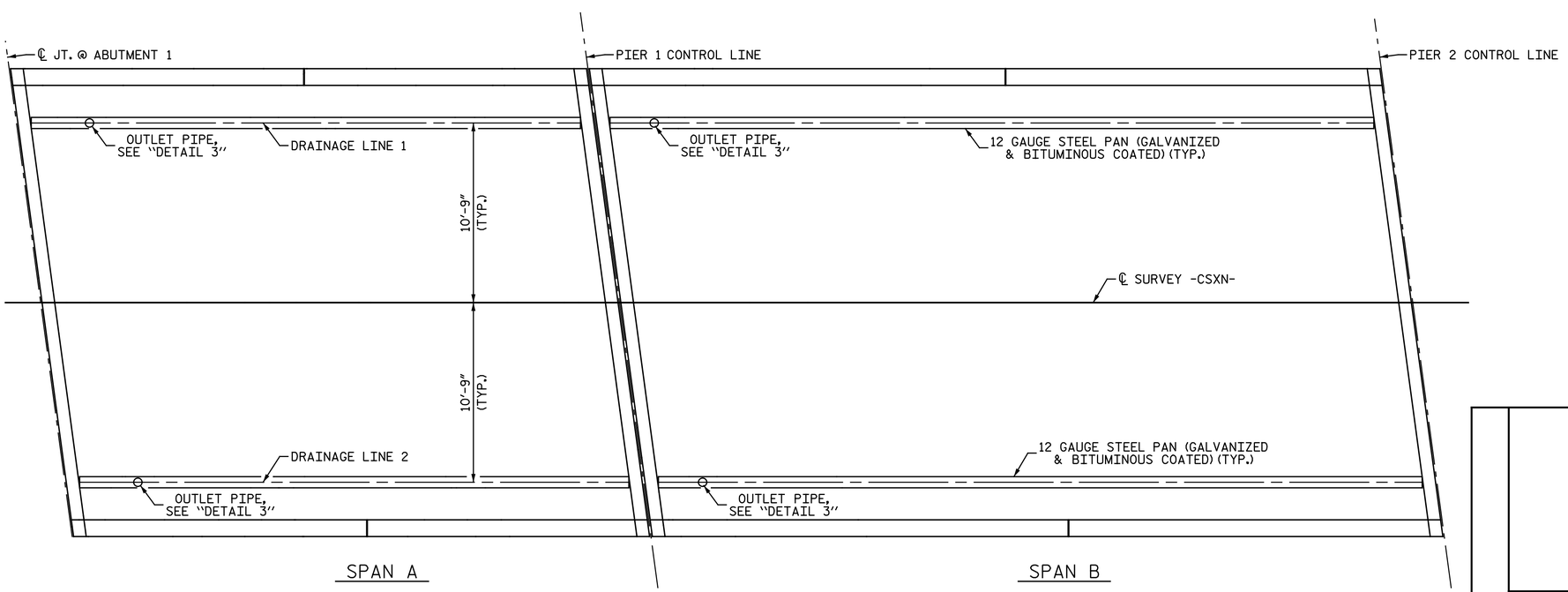

SPAN A

SPAN B

DRAINAGE LAYOUT

PROJECT NO. U-3308

DURHAM COUNTY

STATION: 24+55.20 -LALT-
13+22.18 -CSXN-

SHEET 1 OF 7

NORTH CAROLINA PROFESSIONAL SEAL 25911 ENGINEER DUWAIN G. HATHAWAY

DocuSigned by: Duwain Hathaway 2B37B0071CA0460...

5/3/2016

STATE OF NORTH CAROLINA
DEPARTMENT OF TRANSPORTATION
RALEIGH

SUPERSTRUCTURE

STRUCTURE DRAINAGE DETAILS

SPANS A & B

Michael Baker INTERNATIONAL

Michael Baker Engineering
8000 Regency Parkway, Suite 600
Cary, North Carolina 276518
NC License No.: F-1084

REVISIONS						
NO.	BY:	DATE:	NO.	BY:	DATE:	
1			3			
2			4			

SHEET NO. S4-45

TOTAL SHEETS 68

DRAWN BY : M. D. MAYHEW DATE : 1-10-14
CHECKED BY : S. A. DENNEY DATE : 3-6-14

cmayhew 9:37:25 AM
5/3/2016
Filename: Y:\Projects\NCDOT\U-3308\Structures\Dwgs\Final\404_045_U3308_SMU_SD01.dgn

SITE 4

DocuSign Envelope ID: 34E2C66B-7797-4AB6-9BD3-31F0D6E698EB

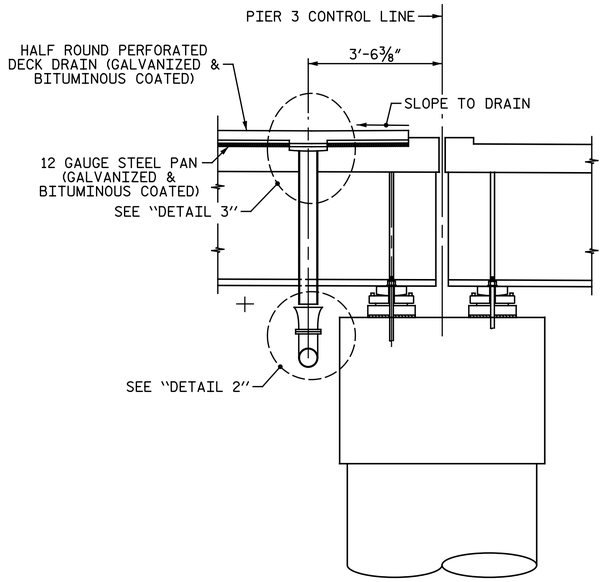

PIER 3

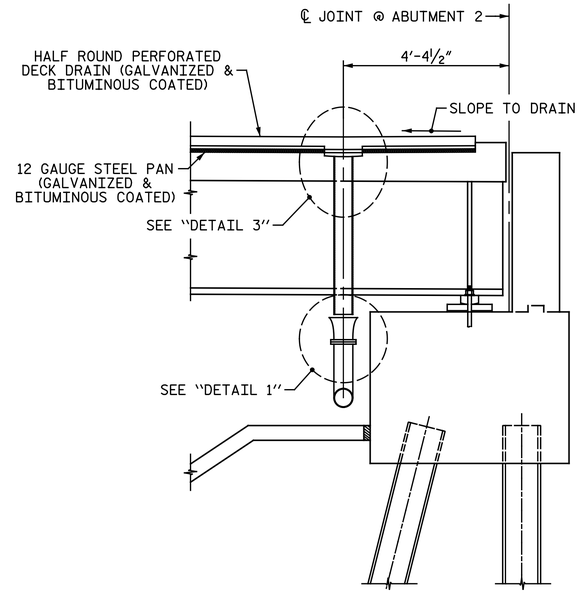

ABUTMENT 2

NOTES:

ALL DIMENSIONS ARE SUBJECT TO ADJUSTMENTS TO FIT MEASUREMENTS TAKEN AFTER DECKS HAVE BEEN POURED.

6"Ø VERTICAL DECK DRAINS SHALL NOT BE RIGIDLY JOINED TO 6" FLANGE AND FLARE. SEE "DETAIL 1" AND "DETAIL 2" ON SHEET 1 OF 7.

FOR "DETAIL 1" AND "DETAIL 2", SEE SHEET 1 OF 7.

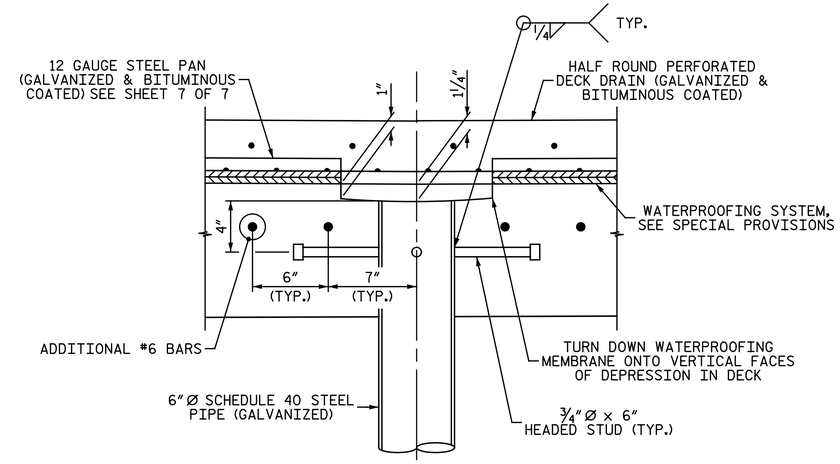

DETAIL 3

DRAINAGE DETAILS

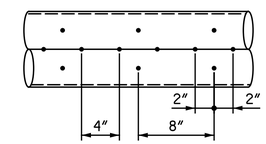

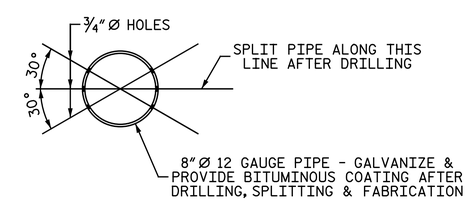

8"Ø PERFORATED PIPE DETAIL

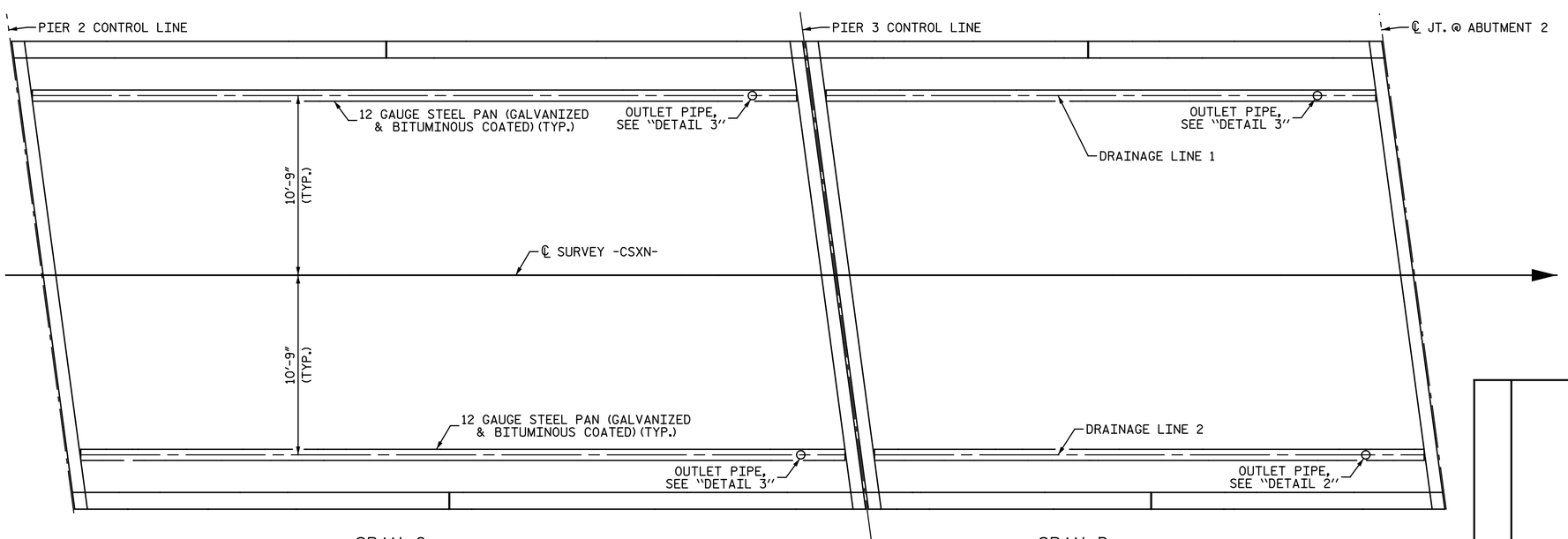

SPAN C

SPAN D

DRAINAGE LAYOUT

PROJECT NO. U-3308

DURHAM COUNTY

STATION: 24+55.20 -LALT-
13+22.18 -CSXN-

SHEET 2 OF 7

NORTH CAROLINA PROFESSIONAL SEAL 25911 ENGINEER DWAIN G. HATHAWAY

DocuSigned by: Dwain Hathaway 283789071DA0460...

5/3/2016

Michael Baker INTERNATIONAL

Michael Baker Engineering
8000 Regency Parkway, Suite 600
Cary, North Carolina 276518
NC License No.: F-1084

STATE OF NORTH CAROLINA
DEPARTMENT OF TRANSPORTATION
RALEIGH

SUPERSTRUCTURE

STRUCTURE DRAINAGE DETAILS

SPANS C & D

REVISIONS								SHEET NO.
NO.	BY:	DATE:	NO.	BY:	DATE:			S4-46
1			3					TOTAL SHEETS
2			4					68

DRAWN BY : M. D. MAYHEW DATE : 1-10-14
CHECKED BY : S. A. DENNEY DATE : 3-6-14

cmayhew 5/3/2016 9:37:26 AM
Filename: Y:\Projects\NCDOT\U-3308\Structures\Dwgs\Final\404_046_U3308_SMU_SD02.dgn

SITE 4

DocuSign Envelope ID: 34E2C66B-7797-4AB6-9BD3-31F0D6E698EB

NOTES:

ALL DIMENSIONS ARE SUBJECT TO ADJUSTMENTS TO FIT MEASUREMENTS TAKEN AFTER DECKS HAVE BEEN POURED.

D.I. = DUCTILE IRON

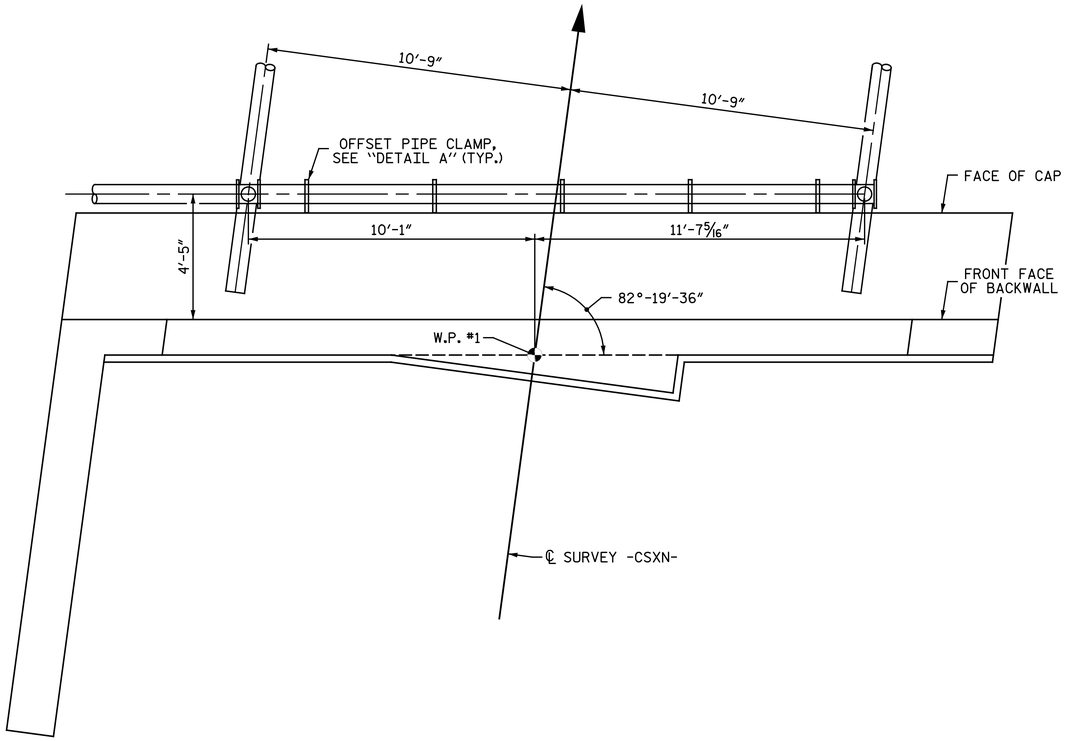

DRAINAGE DETAILS AT ABUTMENT 1

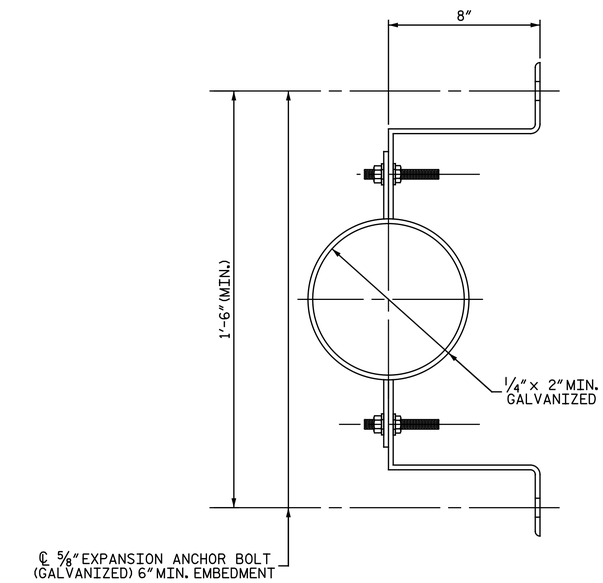

DETAIL A

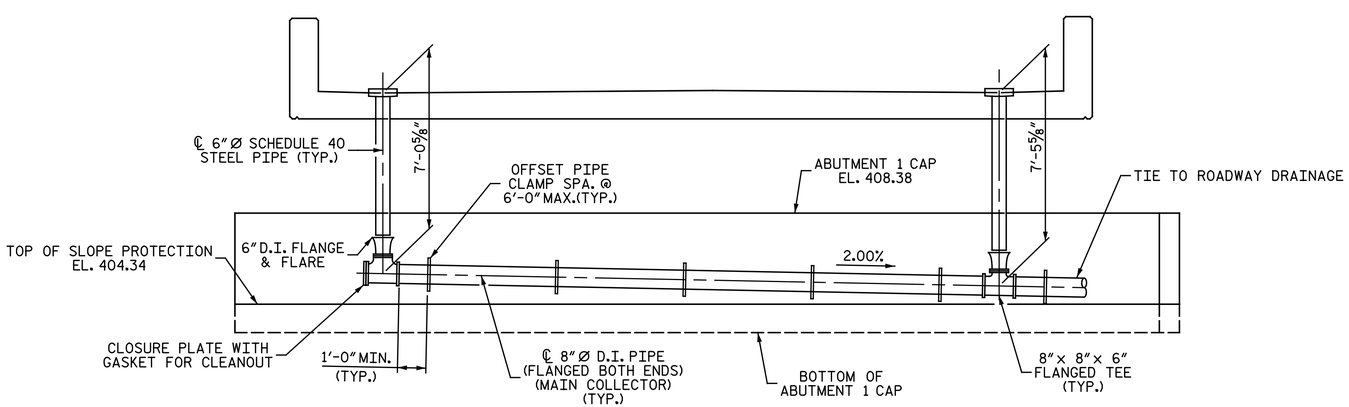

ELEVATION

(LOOKING BACK STATION @ ABUTMENT 1)

PROJECT NO. U-3308

DURHAM COUNTY

STATION: 24+55.20 -LALT-
13+22.18 -CSXN-

SHEET 3 OF 7

NORTH CAROLINA PROFESSIONAL SEAL 25911 ENGINEER DUAIN G. HATHAWAY

DocuSigned by: Duain Hathaway 2557B07F7D4D4BD...

5/3/2016

STATE OF NORTH CAROLINA
DEPARTMENT OF TRANSPORTATION
RALEIGH

SUPERSTRUCTURE

STRUCTURE DRAINAGE DETAILS

ABUTMENT 1

Michael Baker INTERNATIONAL

Michael Baker Engineering
8000 Regency Parkway, Suite 600
Cary, North Carolina 276518
NC License No.: F-1084

REVISIONS							
NO.	BY:	DATE:	NO.	BY:	DATE:		
1			3				
2			4				

SHEET NO. S4-47

TOTAL SHEETS 68

SITE 4

DRAWN BY : M. D. MAYHEW DATE : 1-13-14
CHECKED BY : S. A. DENNEY DATE : 3-6-14

cmayhew 5/3/2016 9:37:26 AM
Filename: Y:\Projects\NCDOT\U-3308\Structures\Dwgs\Final\404_047_U3308_SMU_SD03.dgn

DocuSign Envelope ID: 34E2C66B-7797-4AB6-9BD3-31F0D6E698EB

NOTES:

ALL DIMENSIONS ARE SUBJECT TO ADJUSTMENTS TO FIT MEASUREMENTS TAKEN AFTER DECKS HAVE BEEN POURED.

D.I. = DUCTILE IRON

FOR "DETAIL A", SEE SHEET 3 OF 7.

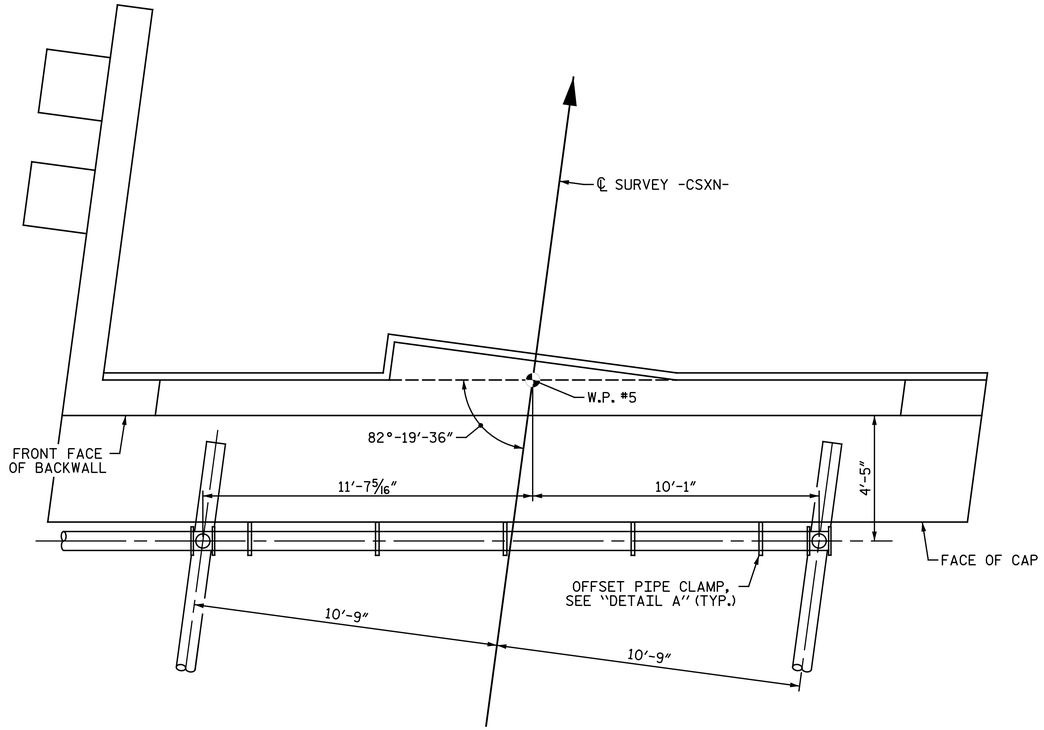

DRAINAGE DETAILS AT ABUTMENT 2

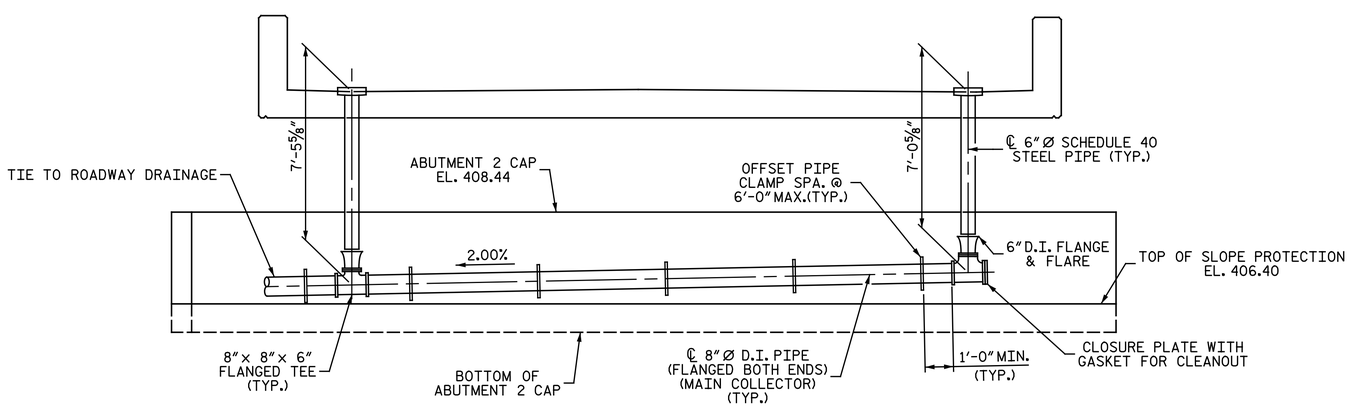

ELEVATION

(LOOKING UP STATION @ ABUTMENT 2)

PROJECT NO. U-3308

DURHAM COUNTY

STATION: 24+55.20 -LALT-
13+22.18 -CSXN-

SHEET 4 OF 7

NORTH CAROLINA PROFESSIONAL SEAL 25911 ENGINEER DUWAIN G. HATHAWAY

DocuSigned by: Duwain Hathaway
5/3/2016

STATE OF NORTH CAROLINA
DEPARTMENT OF TRANSPORTATION
RALEIGH

SUPERSTRUCTURE

STRUCTURE DRAINAGE DETAILS

ABUTMENT 2

Michael Baker INTERNATIONAL

Michael Baker Engineering
8000 Regency Parkway, Suite 600
Cary, North Carolina 276518
NC License No.: F-1084

REVISIONS						
NO.	BY:	DATE:	NO.	BY:	DATE:	
1			3			
2			4			

SHEET NO. S4-48

TOTAL SHEETS 68

SITE 4

DRAWN BY : M. D. MAYHEW DATE : 1-13-14
CHECKED BY : S. A. DENNEY DATE : 3-6-14

cmayhew 5/3/2016 9:37:27 AM
Filename: Y:\Projects\NCDOT\U-3308\Structures\Dwgs\Final\404_048_U3308_SMU_SD04.dgn

DocuSign Envelope ID: 34E2C66B-7797-4AB6-9BD3-31F0D6E698EB

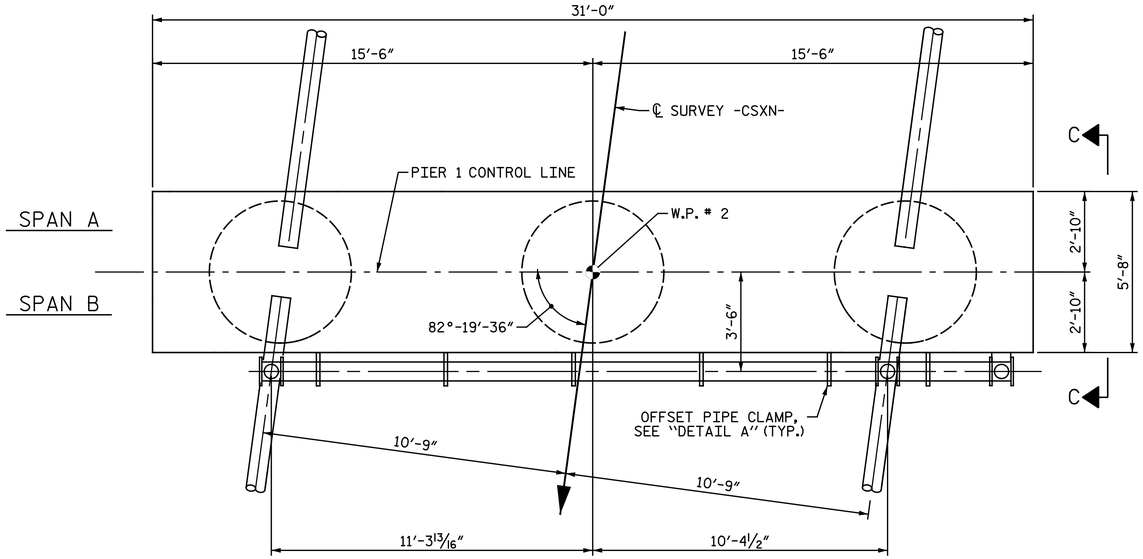

DRAINAGE DETAILS AT PIER 1

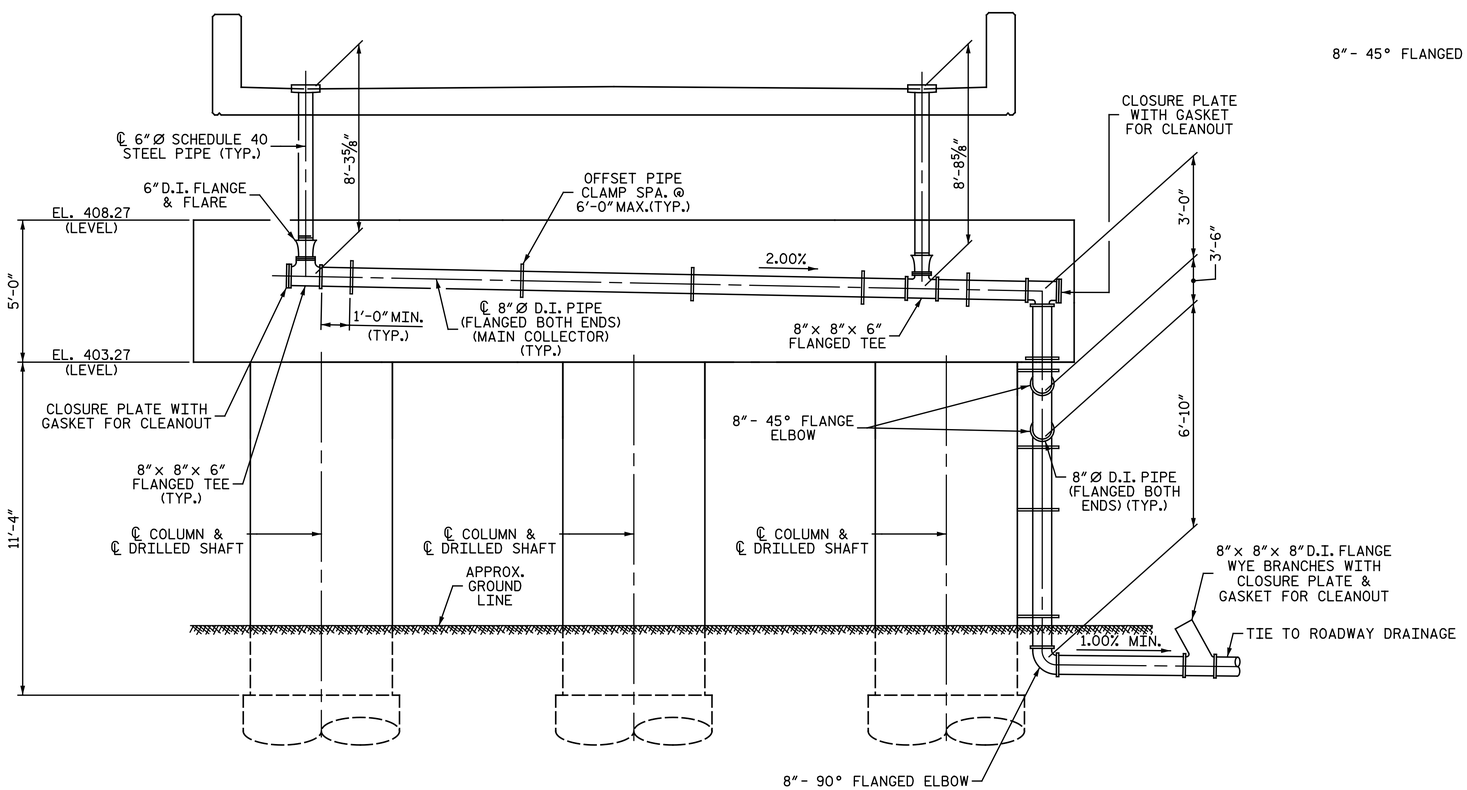

ELEVATION

(LOOKING BACK STATION AT PIER 1)

NOTES:

ALL DIMENSIONS ARE SUBJECT TO ADJUSTMENTS TO FIT MEASUREMENTS TAKEN AFTER DECKS HAVE BEEN POURED.

D.I. = DUCTILE IRON

FOR "DETAIL A", SEE SHEET 3 OF 7.

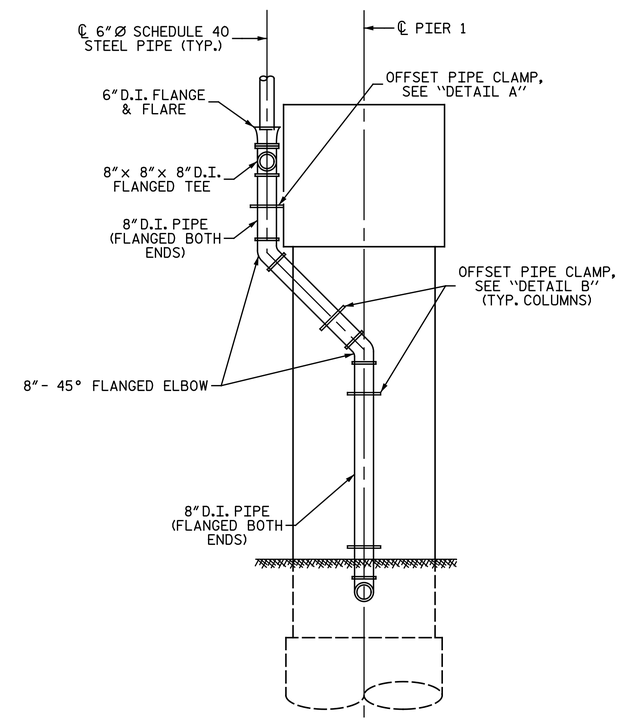

VIEW C-C

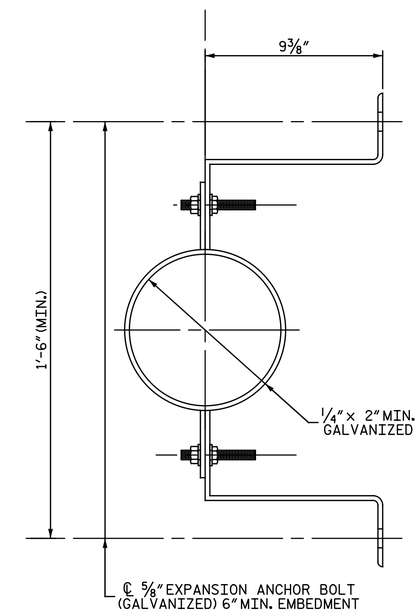

DETAIL B

PROJECT NO. U-3308

DURHAM COUNTY

STATION: 24+55.20 -LALT-
13+22.18 -CSXN-

SHEET 5 OF 7

NORTH CAROLINA PROFESSIONAL SEAL 25911 ENGINEER DWAIN G. HATHAWAY

DocuSigned by: Dwain Hathaway 283786071DA0460...

5/3/2016

Michael Baker INTERNATIONAL

Michael Baker Engineering
8000 Regency Parkway, Suite 600
Cary, North Carolina 276518
NC License No.: F-1084

STATE OF NORTH CAROLINA
DEPARTMENT OF TRANSPORTATION
RALEIGH

SUPERSTRUCTURE

STRUCTURE DRAINAGE DETAILS

PIER 1

REVISIONS								SHEET NO.
NO.	BY:	DATE:	NO.	BY:	DATE:			S4-49
1			3					TOTAL SHEETS
2			4					68

DRAWN BY : M. D. MAYHEW DATE : 1-20-14
CHECKED BY : S. A. DENNEY DATE : 3-6-14

cmayhew
5/3/2016 9:37:41 AM
Filename: Y:\Projects\NCDOT\U-3308\Structures\Dwgs\Final\404_049_U3308_SMU_SD05.dgn

SITE 4

DocuSign Envelope ID: 34E2C66B-7797-4AB6-9BD3-31F0D6E698EB

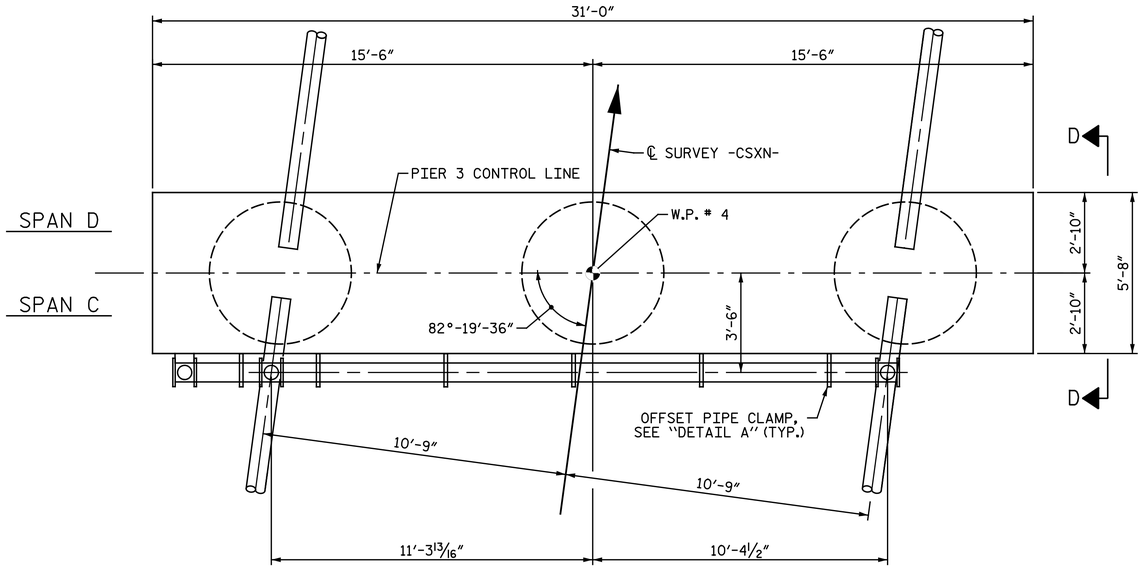

DRAINAGE DETAILS AT PIER 3

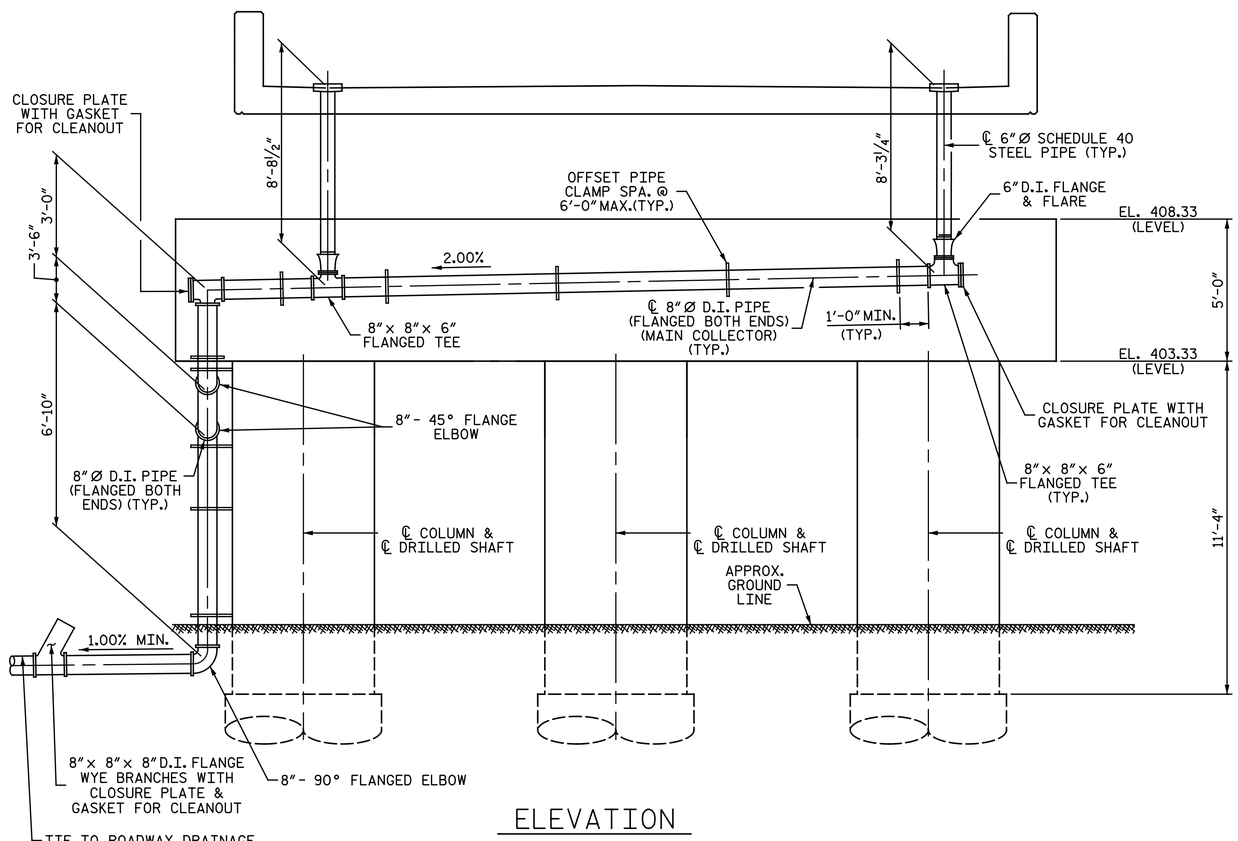

ELEVATION

(LOOKING UP STATION AT PIER 3)

NOTES:

ALL DIMENSIONS ARE SUBJECT TO ADJUSTMENTS TO FIT MEASUREMENTS TAKEN AFTER DECKS HAVE BEEN POURED.

D.I. = DUCTILE IRON

FOR "DETAIL A", SEE SHEET 3 OF 7.

FOR "DETAIL B", SEE SHEET 5 OF 7.

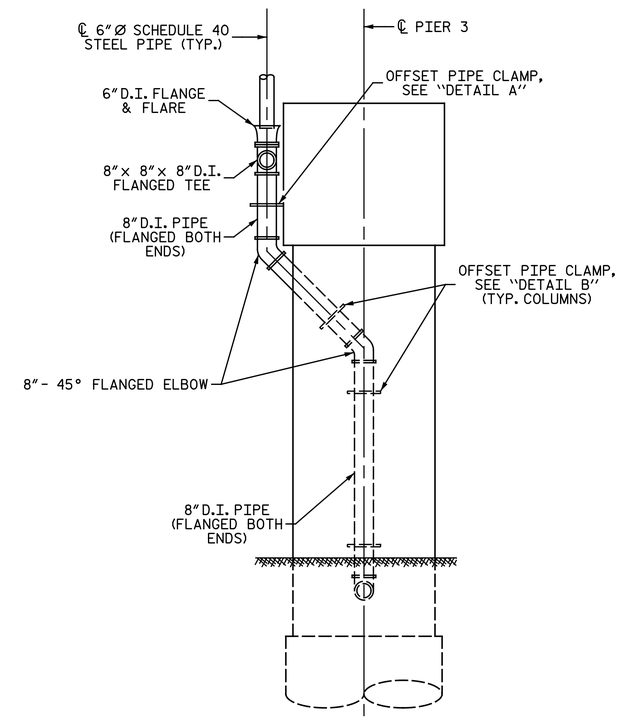

VIEW D-D

PROJECT NO. U-3308

DURHAM COUNTY

STATION: 24+55.20 -LALT-
13+22.18 -CSXN-

SHEET 6 OF 7

NORTH CAROLINA PROFESSIONAL SEAL 25911 ENGINEER DWAIN G. HATHAWAY

Docusigned by: Dwain Hathaway 283780071DA0460...

5/3/2016

Michael Baker INTERNATIONAL

Michael Baker Engineering
8000 Regency Parkway, Suite 600
Cary, North Carolina 276518
NC License No.: F-1084

STATE OF NORTH CAROLINA
DEPARTMENT OF TRANSPORTATION
RALEIGH

SUPERSTRUCTURE

STRUCTURE DRAINAGE DETAILS

PIER 3

REVISIONS						
NO.	BY:	DATE:	NO.	BY:	DATE:	
1			3			
2			4			

SHEET NO. S4-50

TOTAL SHEETS 68

DRAWN BY : M. D. MAYHEW DATE : 1-20-14
CHECKED BY : S. A. DENNEY DATE : 3-6-14

cmayhew 5/3/2016 9:37:41 AM
Filename: Y:\Projects\NCDOT\U-3308\Structures\Dwgs\Final\404_050_U3308_SMU_SD06.dgn

SITE 4

DocuSign Envelope ID: 34E2C66B-7797-4AB6-9BD3-31F0D6E698EB

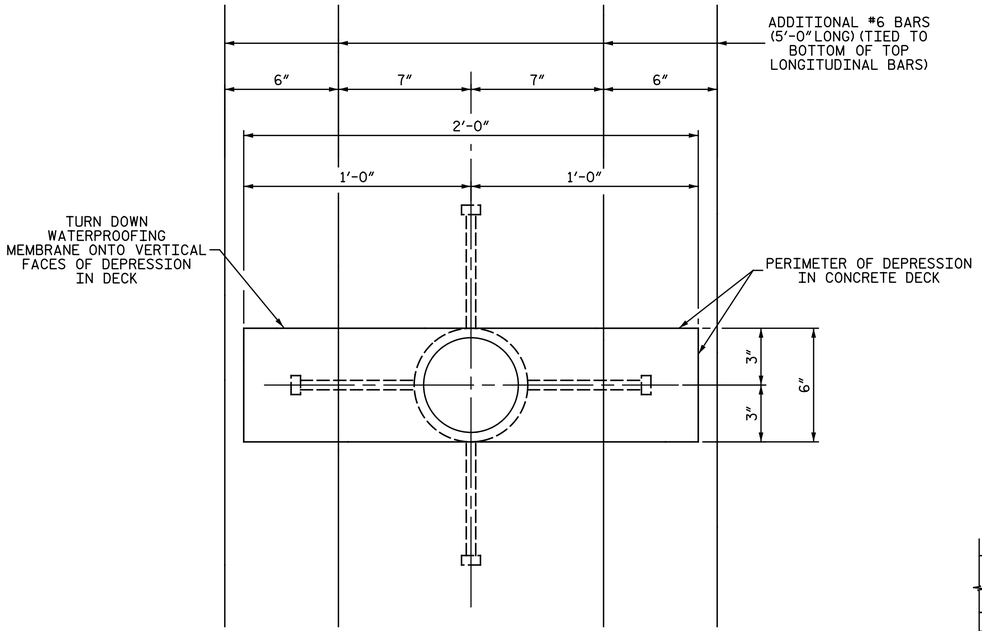

PLAN AT DOWNSPOUT

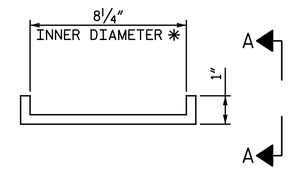

NOTES: PROVIDE ⅜" × ¾" SLOTS IN LINE WITH HOLES IN PERFORATED PIPE.

✳ CONFIRM PAN WIDTH AFTER PIPE SUPPLIER PROVIDES OUT-TO-OUT PIPE DIAMETER.

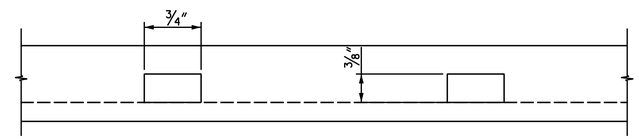

VIEW A-A

STEEL PAN DETAIL

NOTES:

ALL PIPES, FLANGES AND FITTINGS SHALL BE CLASS 53 DUCTILE IRON, UNLESS NOTED OTHERWISE.

ALL BENDS TO BE SHORT RADIUS, INCLUDING FLANGE AND FLARE BENDS, UNLESS OTHERWISE NOTED.

MAKE FINAL PIPE ALIGNMENT AND TIGHTEN U-BOLTS AFTER RAILROAD TRACK HAS BEEN LAID ACROSS THE BRIDGE.

PAYMENT FOR ALL MATERIALS, FABRICATION, INSTALLATION AND ADJUSTMENTS RELATED TO STRUCTURE DRAINAGE SHALL BE INCLUDED IN THE CONTRACT LUMP SUM PRICE BID FOR "STRUCTURE DRAINAGE SYSTEM". NO SEPARATE MEASUREMENT OR PAYMENT SHALL BE MADE FOR ANY COMPONENT OF THE STRUCTURE DRAINAGE SYSTEM INCLUDING, BUT NOT LIMITED TO:

- DUCTILE IRON PIPE AND FITTINGS
- STANDARD PIPE
- GASKET AND PVC OR NEOPRENE COATED STRIPS
- STEEL SUPPORT ANGLES AND PLATES
- U-BOLTS AND H.S. BOLTS, WASHERS, AND NUTS
- OFFSET PIPE CLAMPS AND EXPANSION ANCHOR BOLTS

PROVIDE PVC OR NEOPRENE-COATED STRIPS, EPOXY-CEMENTED TO THE U-BOLT OR PIPE FOR STRAY CURRENT PROTECTION.

THE OUTSIDE COATING FOR D.I. PIPE MAY BE PAINTED WITH A SHOP PRIME COAT OF INORGANIC ZINC PRIMER AND A FINISH (FIELD) COATING OF VINYL PAINT AS SPECIFIED FOR THE STRUCTURAL STEEL.

FOR STRUCTURE DRAINAGE SYSTEM, SEE SPECIAL PROVISIONS.

D.I. = DUCTILE IRON

FOR WATERPROOFING SYSTEM, SEE SPECIAL PROVISION "WATERPROOFING (RAILROAD STRUCTURES)".

STEEL PAN DETAIL

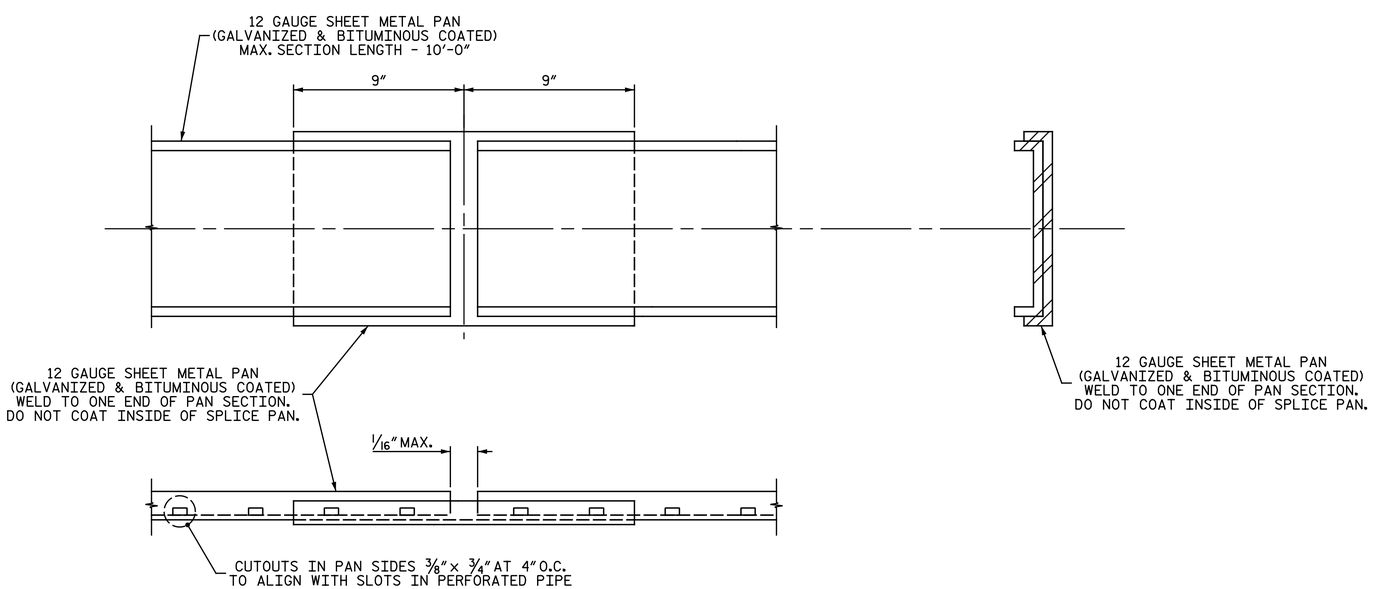

PAN SPLICE DETAIL

STRUCTURE DRAINAGE SYSTEM ESTIMATED QUANTITIES		
ITEM	QUANTITY	UNIT
8" I.D. DUCTILE IRON PIPE, CLASS 53 (FLANGED BOTH ENDS)	137.5	FT.
6" Ø STD PIPE (GALVANIZED, WITH ¾" Ø × 6" HEADED STUDS)	57	FT.
6" & 8" I.D. DUCTILE IRON PIPE FLANGED FITTINGS, 250 P.S.I. P.R.	2760	LBS.
8" I.D. DUCTILE IRON BLIND FLANGES	420	LBS.
8" I.D. PERFORATED HALF ROUND PIPE, (GALVANIZED AND BITUMINOUS COATED)	314.5	FT.
STEEL PAN BELOW HALF ROUND PIPE, (GALVANIZED AND BITUMINOUS COATED)	314.5	FT.
8" I.D. OFFSET PIPE CLAMPS	240	LBS.

PROJECT NO. U-3308
DURHAM COUNTY
STATION: 24+55.20 -LALT-
13+22.18 -CSXN-
SHEET 7 OF 7

NORTH CAROLINA PROFESSIONAL SEAL 25911 ENGINEER DUAIN G. HATHAWAY

DocuSigned by: Duain Hathaway 2E07B0710A0A4D...
5/3/2016

STATE OF NORTH CAROLINA
DEPARTMENT OF TRANSPORTATION
RALEIGH
SUPERSTRUCTURE
STRUCTURE DRAINAGE DETAILS

Michael Baker INTERNATIONAL
Michael Baker Engineering
8000 Regency Parkway, Suite 600
Cary, North Carolina 27518
NC License No.: F-1084

REVISIONS							
NO.	BY:	DATE:	NO.	BY:	DATE:	SHEET NO.	S4-51
1			3			TOTAL SHEETS	68
2			4				

DRAWN BY : M. D. MAYHEW DATE : 1-20-14
CHECKED BY : S. A. DENNEY DATE : 3-6-14

cmayhew 9:37:42 AM
5/3/2016
Filename: Y:\Projects\NCDOT\U-3308\Structures\Dwgs\Final\404_051_U3308_SMU_SD07.dgn

SITE 4

DocuSign Envelope ID: 34E2C66B-7797-4AB6-9BD3-31F0D6E698EB

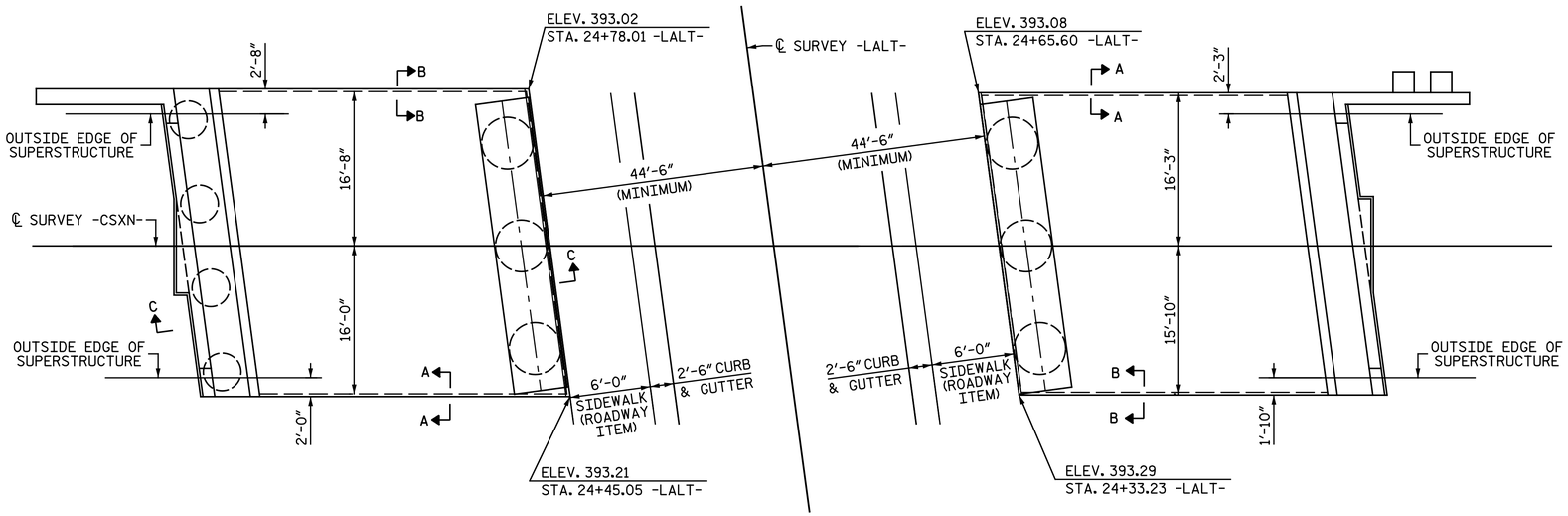

PLAN

GENERAL NOTES:

SLOPE PROTECTION SHALL BE PLACED UNDER THE ENDS OF THE BRIDGE AS SHOWN IN THE DETAILS. MEASUREMENT AND PAYMENT SHALL BE AS PRESCRIBED IN SECTION 462 OF THE STANDARD SPECIFICATIONS. FOR BERM WIDTH, SEE GENERAL DRAWING.

SLOPE PROTECTION SHALL CONSIST OF 4" POURED-IN-PLACE CONCRETE PAVING AS SHOWN IN THE DETAILS ON THIS SHEET. CONCRETE SHALL BE CLASS "B". THE CONCRETE SURFACE SHALL BE FLOATED WITH A WOODEN FLOAT AND FINISHED. WELDED WIRE FABRIC REINFORCING SHALL BE 6 X 6 - W1.4 X W1.4, 60" WIDE. SLOPE PROTECTION SHALL BE POURED IN 5' STRIPS AS SHOWN IN THE "POURING DETAIL" WITH 2'-0" LONG #4 BARS PLACED ALONG THE SLOPE BETWEEN STRIPS AT 1'-6" MAXIMUM SPACING. SLOPE PROTECTION MAY BE POURED IN ALTERNATE 4' AND 5' STRIPS AS SHOWN IN THE "OPTIONAL POURING DETAIL" WITH ADJACENT RUNS OF WELDED WIRE FABRIC LAPPING AT LEAST 6". THE COST OF THE WELDED WIRE FABRIC AND #4 BARS, IF USED, SHALL BE INCLUDED IN THE CONTRACT UNIT PRICE BID PER SQUARE YARD FOR SLOPE PROTECTION.

BRIDGE @ STA. 13+22.18 -CSXN-	4 INCH SLOPE PROTECTION	* WELDED WIRE FABRIC 60 INCHES WIDE
	SQUARE YARDS	APPROX. L.F.
ABUTMENT 1	145	290
ABUTMENT 2	143	286

* QUANTITY SHOWN IS BASED ON 5' POURS.

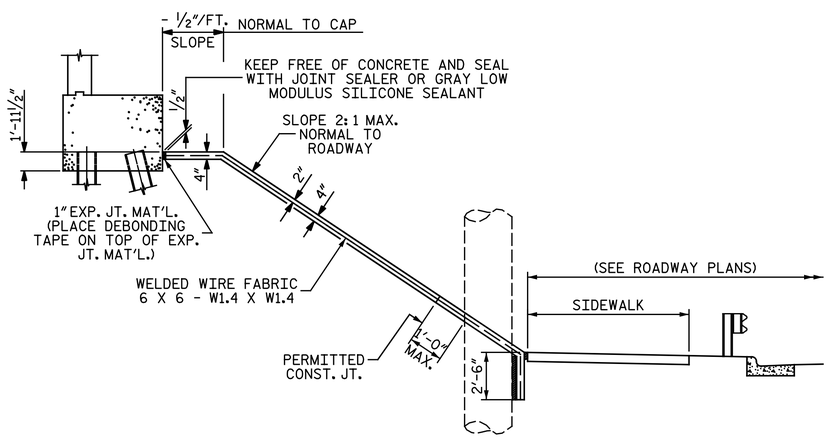

SECTION C-C

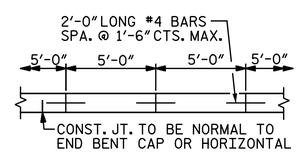

STRIP WIDTHS MAY VARY IN CURVED PORTION.

POURING DETAIL

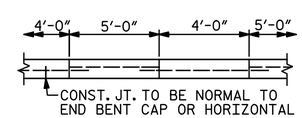

POUR A 4'-0" STRIP FIRST. STRIP WIDTHS MAY VARY IN CURVED PORTION.

OPTIONAL POURING DETAIL

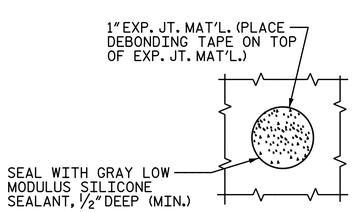

PLAN WHERE CONCRETE SLOPE PROTECTION MUST BE PLACED AROUND A PIER COLUMN

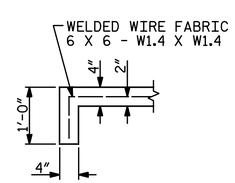

SECTION A-A

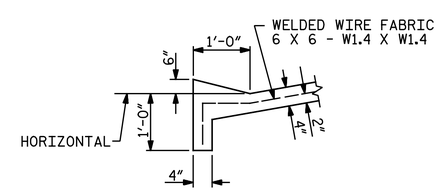

SECTION B-B

PROJECT NO. U-3308
DURHAM COUNTY
STATION: 24+55.20 -LALT-
13+22.18 -CSXN-

NORTH CAROLINA PROFESSIONAL SEAL 25911 ENGINEER DWAIN G. HATHAWAY

Docusigned by: Dwain Hathaway 283786071DA0460...
5/3/2016

Michael Baker INTERNATIONAL
Michael Baker Engineering
8000 Regency Parkway, Suite 600
Cary, North Carolina 276518
NC License No.: F-1084

STATE OF NORTH CAROLINA
DEPARTMENT OF TRANSPORTATION
RALEIGH

SLOPE PROTECTION DETAILS

REVISIONS								SHEET NO.
NO.	BY:	DATE:	NO.	BY:	DATE:			S4-52
1			3					TOTAL SHEETS
2			4					68

DRAWN BY : M. D. MAYHEW DATE : 1-8-14
CHECKED BY : S. A. DENNEY DATE : 3-6-14

mayhew
5/3/2016 9:37:43 AM
Filename: Y:\Projects\NCDOT\U-3308\Structures\Dwgs\Final\404_052_U3308_SMU_SP.dgn

SITE 4

DocuSign Envelope ID: 48A27C4D-A37A-43BA-95EE-BF2D2CDF1FAD

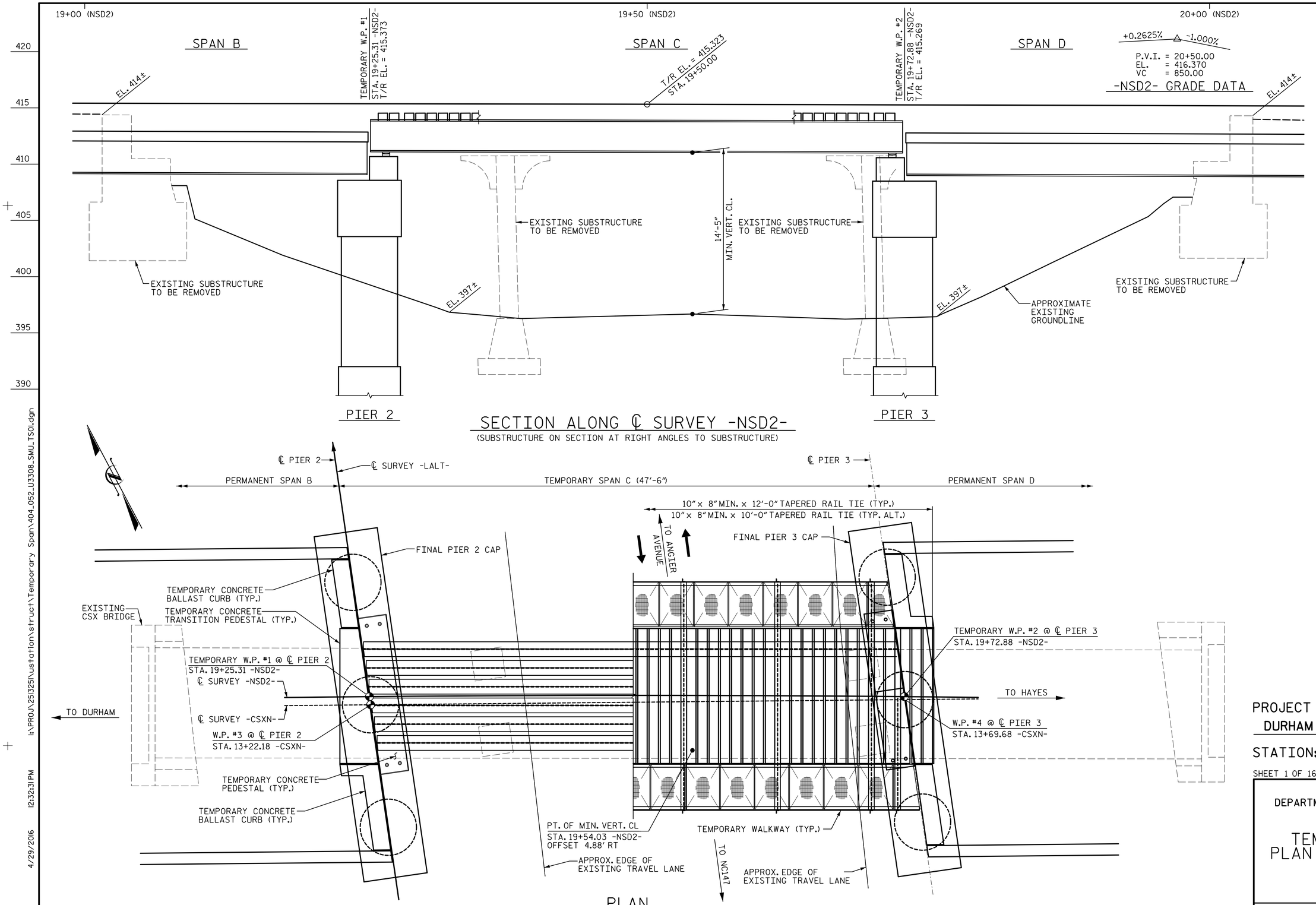

PROJECT NO. U-3308

DURHAM COUNTY

STATION: 24+55.20 -LALT-
13+22.18 -CSXN-

SHEET 1 OF 16

STATE OF NORTH CAROLINA
DEPARTMENT OF TRANSPORTATION
RALEIGH

TEMPORARY SPAN PLAN AND ELEVATION

NORTH CAROLINA PROFESSIONAL SEAL 19765 ENGINEER PAUL E. KELLY, JR. 4/29/2016

DocuSigned by: Paul Kelly 26AB8B0C2A4B4B...

REVISIONS								
NO.	BY:	DATE:	NO.	BY:	DATE:			
1			3					
2			4					

SHEET NO. S4-53

TOTAL SHEETS 68

STV / Ralph Whitehead Associates, Inc.
900 W Trade Street, Suite 715
Charlotte, NC 28202
NC License No. F-0991

DOCUMENT NOT CONSIDERED FINAL UNLESS ALL SIGNATURES COMPLETED

DRAWN BY : MTC DATE : 06-14
CHECKED BY : DJM DATE : 06-14

pkelly 4/29/2016 12:32:31 PM I:\PROJ\25I325I\ustation\struct\Temporary Span\404_052_U3308_SMU_TS01.dgn

DocuSign Envelope ID: 48A27C4D-A37A-43BA-95EE-BF2D2CDF1FAD

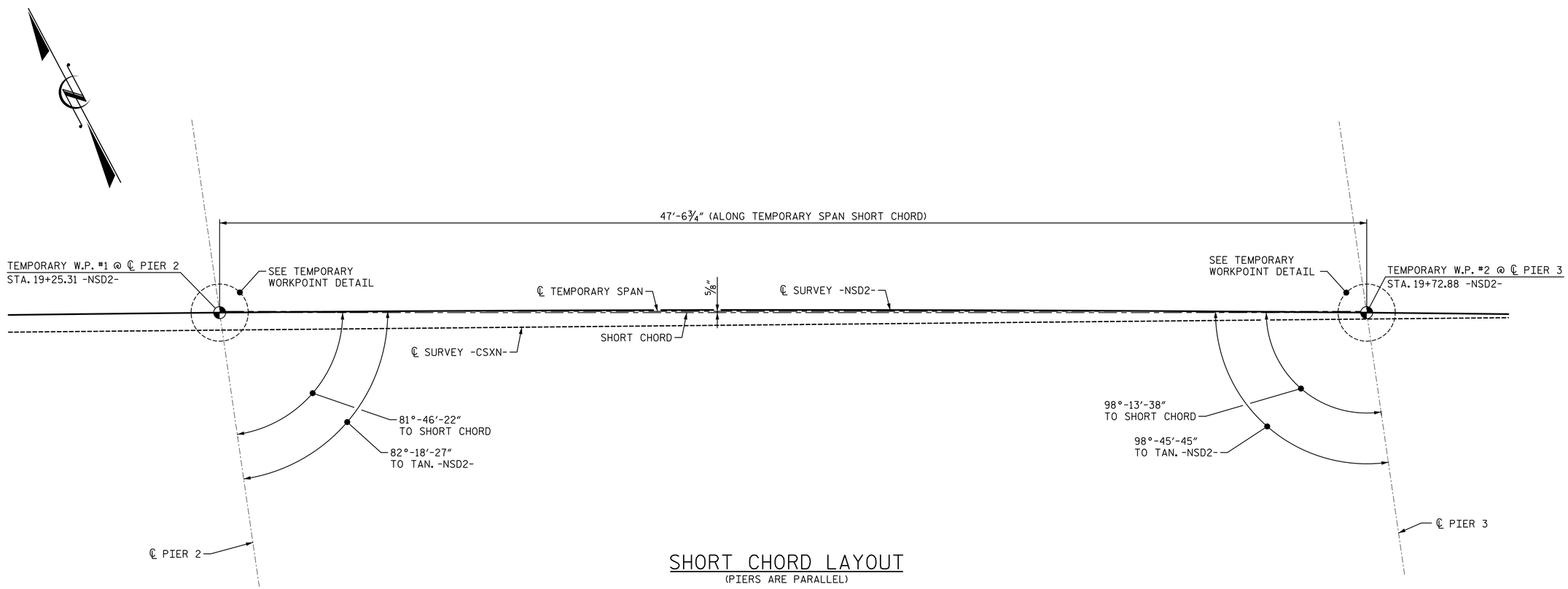

SHORT CHORD LAYOUT

(PIERS ARE PARALLEL)

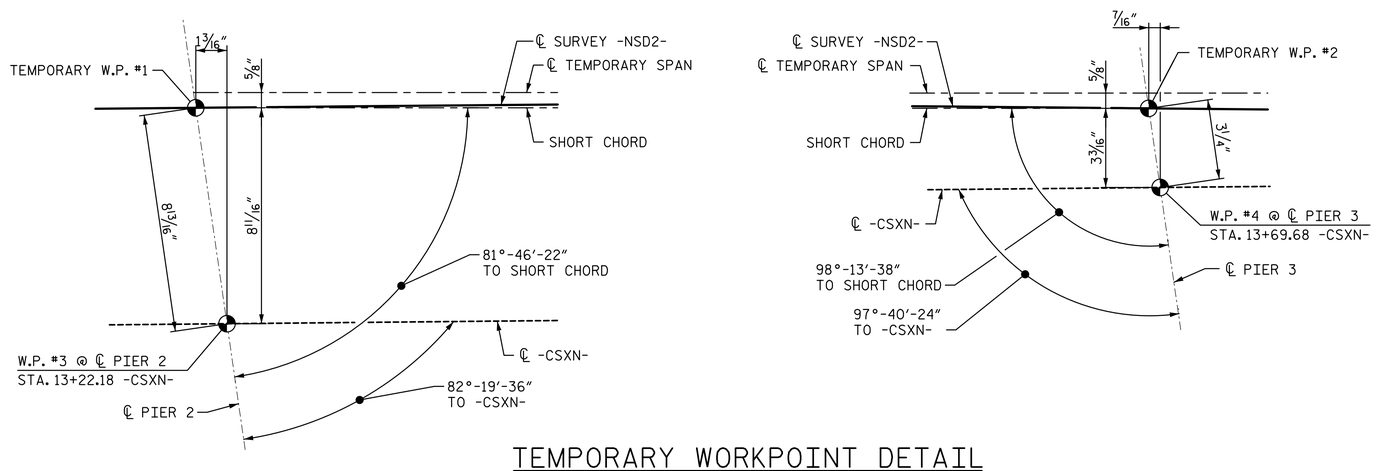

TEMPORARY WORKPOINT DETAIL

(PIERS ARE PARALLEL)

PROJECT NO. U-3308

DURHAM COUNTY

STATION: 24+55.20 -LALT-
13+22.18 -CSXN-

SHEET 2 OF 16

STATE OF NORTH CAROLINA
DEPARTMENT OF TRANSPORTATION
RALEIGH

TEMPORARY SPAN SHORT CHORD LAYOUT

NORTH CAROLINA PROFESSIONAL SEAL 19765 ENGINEER PAUL E. KELLY, JR.
DocuSigned by: Paul E. Kelly, Jr. 26AD0C0C0C0C0C0... 4/29/2016

REVISIONS						
NO.	BY:	DATE:	NO.	BY:	DATE:	
1			3			
2			4			

SHEET NO. S4-54

TOTAL SHEETS 68

DRAWN BY : MTC DATE : 06-14
CHECKED BY : DJM DATE : 06-14

DOCUMENT NOT CONSIDERED FINAL UNLESS ALL SIGNATURES COMPLETED

STV / Ralph Whitehead Associates, Inc.
900 W Trade Street, Suite 715
Charlotte, NC 28202
NC License No. F-0991

i:\PROJ\25l325l\ustation\struct\Temporary Span\404_053_U3308_SMU_TS02.dgn 4/29/2016 12:32:34 PM pkelly

DocuSign Envelope ID: 48A27C4D-A37A-43BA-95EE-BF2D2CDF1FAD

TEMPORARY SPAN GENERAL NOTES

1. THE TEMPORARY SPAN HAS BEEN DESIGNED IN ACCORDANCE WITH THE REQUIREMENTS OF THE CURRENT EDITION OF AREMA'S "MANUAL FOR RAILWAY ENGINEERING, VOL. 2, STRUCTURES", AND NORFOLK SOUTHERN CORPORATION'S "UNDERPASS GRADE SEPARATION CRITERIA".

2. ASSUMED LIVE LOAD: COOPER E80 OR ALTERNATE LIVE LOAD.

3. FOR ADDITIONAL NOTES AND DESIGN DATA SEE SHEET "GENERAL DRAWING SHEET 4 OF 5". IN THE EVENT ANY NOTES CONFLICT, THE NOTES ON THIS SHEET SHALL CONTROL FOR THE TEMPORARY SPAN.

4. THE TEMPORARY SPAN HAS BEEN DESIGNED IN ACCORDANCE WITH THE REQUIREMENTS OF THE AASHTO STANDARD SPECIFICATIONS FOR SEISMIC DESIGN OF HIGHWAY BRIDGES FOR SEISMIC ZONE 1.

5. REINFORCING STEEL SHALL BE ASTM 615, GRADE 60. ALL DIMENSIONS RELATING TO BAR SPACING ARE TO BAR CENTERS UNLESS NOTED OTHERWISE. FABRICATION IS TO BE IN ACCORDANCE WITH THE "MANUAL OF STANDARD PRACTICE", ACI 315 (CURRENT EDITION). ALL REINFORCING IN THE CONCRETE DECK SLAB AND PARAPETS SHALL BE EPOXY COATED.

6. THE CONTRACTOR SHALL PROVIDE INDEPENDENT ASSURANCE SAMPLES OF REINFORCING STEEL AS FOLLOWS: FOR PROJECTS REQUIRING UP TO 400 TONS OF REINFORCING STEEL, ONE 30 INCH SAMPLE OF EACH SIZE BAR USED, AND FOR PROJECTS REQUIRING OVER 400 TONS OF REINFORCING STEEL, TWO 30 INCH SAMPLES OF EACH SIZE BAR USED. THE BARS FROM WHICH THE SAMPLES ARE TAKEN MUST THEN BE SPLICED WITH REPLACEMENT BARS OF THE SIZE AND LENGTH OF THE SAMPLE PLUS A MINIMUM LAP SPLICE OF THIRTY BAR DIAMETERS. PAYMENT FOR THE SAMPLES OF REINFORCING STEEL SHALL BE CONSIDERED INCIDENTAL TO VARIOUS PAY ITEMS.

7. ALL MATERIALS AND WORKMANSHIP SHALL BE IN ACCORDANCE WITH "STANDARD SPECIFICATIONS FOR ROADS AND STRUCTURES", JANUARY 2012, NORTH CAROLINA DEPARTMENT OF TRANSPORTATION (HEREIN CALLED STANDARD SPECIFICATIONS), EXCEPT AS NOTED HEREIN, ELSEWHERE ON PLANS, OR IN THE SPECIAL PROVISIONS. STRUCTURAL STEEL SHALL BE IN ACCORDANCE WITH CURRENT AREMA SPECIFICATIONS AND NORFOLK SOUTHERN'S "SPECIFICATIONS FOR STEEL".

8. ALL CONCRETE USED FOR THE TEMPORARY SPAN (DECK AND CURBS) SHALL BE MIN. 5,000 PSI CONCRETE, WITH NO.57 OR 67 COARSE AGGREGATE AND SHALL BE AIR-ENTRAINED. MINIMUM CEMENT PER CUBIC YARD OF CONCRETE SHALL BE 6.5 BAGS. NO SUBSTITUTION OF FLY ASH, BLAST FURNACE SLAG OR OTHER MATERIAL WILL BE PERMITTED IN MEETING THIS MINIMUM CEMENT REQUIREMENT. CHAMFER ALL EXPOSED EDGES AND CORNERS ¾" EXCEPT AS NOTED ON THE PLANS. THE USE OF GROUND GRANULATED BLAST FURNACE SLAG IS NOT PERMITTED IN THIS STRUCTURE.

9. CONTROL OF WORK: ALL WORK INVOLVED IN THE CONSTRUCTION OF THE RAILWAY STRUCTURE SHALL BE PERFORMED SATISFACTORY TO THE ENGINEER AND/OR NORFOLK SOUTHERN RAILWAY COMPANY. ALL METHODS OF HANDLING THE WORK AFFECTING THE SAFETY OF RAIL OPERATIONS MUST BE APPROVED BY THE RAILWAY COMPANY BEFORE PROCEEDING WITH THAT PORTION OF THE WORK. RAIL TRAFFIC SHALL, AT ALL TIMES, BE MAINTAINED AND PROTECTED. THE CONTRACTOR SHALL NOT AT ANY TIME DELAY OR INTERFERE WITH RAIL OPERATIONS.

10. NEEDLE BEAMS WILL NOT BE ALLOWED UNLESS OTHERWISE CALLED FOR ON THE PLANS OR APPROVED BY THE ENGINEER.

11. FOR PORTLAND CEMENT, SEE SPECIAL PROVISIONS.

12. FOR FINE AND COARSE AGGREGATE, SEE SPECIAL PROVISIONS.

13. SEE "TEMPORARY SPAN STRUCTURAL STEEL NOTES" SHEET FOR ADDITIONAL NOTES.

14. FOR RAILROAD TRACKWORK, SEE RAILROAD TRACKWORK PLANS.

15. FOR SUBMITTAL OF WORKING DRAWINGS, SEE SPECIAL PROVISIONS.

16. FOR FALSEWORK AND FORMWORK, SEE SPECIAL PROVISIONS.

17. FOR CRANE SAFETY, SEE SPECIAL PROVISIONS.

18. FOR GROUT FOR STRUCTURES, SEE SPECIAL PROVISIONS.

19. FOR CAST-IN-PLACE CONCRETE, SEE SPECIAL PROVISION FOR NORFOLK SOUTHERN SPECIFICATIONS FOR CAST-IN-PLACE CONCRETE.

20. FOR PAINTING STRUCTURAL STEEL, SEE SPECIAL PROVISION FOR NORFOLK SOUTHERN SPECIFICATIONS FOR PAINTING SHOP FABRICATED BRIDGE STEEL.

21. FOR PROTECTION OF RAILWAY INTERESTS, SEE SPECIAL PROVISIONS.

22. FOR RAILROAD ROADBED, SEE RAILROAD ROADBED SPECIAL PROVISIONS.

23. FOR MAINTENANCE AND PROTECTION OF TRAFFIC BENEATH PROPOSED STRUCTURE, SEE SPECIAL PROVISIONS.

24. SHOCK PADS SHALL BE PREFORMED FABRIC BEARING PADS, ½" THICK, AND SHALL BE EITHER SHOCK PAD STYLE 15175, AS MANUFACTURED BY THE ALERT MANUFACTURING AND SUPPLY COMPANY, CHICAGO, IL; OR FABREEKA PADS, AS MANUFACTURED BY THE FABREEKA PRODUCTS COMPANY, BOSTON, MA; OR SORBTEX PADS, AS MANUFACTURED BY VOSS ENGINEERING, INC., CHICAGO, IL; OR AN APPROVED EQUAL.

25. ALL CONSTRUCTION JOINTS SHOWN ON THESE PLANS SHALL BE REQUIRED UNLESS SHOWN OPTIONAL. CONSTRUCTION JOINTS SHALL NOT BE PERMITTED EXCEPT AS SHOWN ON THE PLANS, OR WHERE WRITTEN APPROVAL HAS BEEN OBTAINED.

26. BENCHMARK: SEE LOCATION SKETCH.

27. DIRECT TENSION INDICATORS (DTI) WILL NOT BE PERMITTED. USE THE TURN-OF-NUT METHOD FOR INSTALLING AND TIGHTENING HIGH STRENGTH BOLTS.

28. THE RAILROAD TRACK TOP OF RAIL ELEVATIONS ON THE PLANS ARE FROM THE BEST INFORMATION AVAILABLE. PRIOR TO BEGINNING BRIDGE CONSTRUCTION, VERIFY THE TOP OF RAIL ELEVATIONS AND REPORT ANY VARIATIONS TO THE ENGINEER. ANY PLAN REVISIONS NECESSARY TO ACHIEVE THE REQUIRED MINIMUM CLEARANCE WILL BE PROVIDED BY THE DEPARTMENT.

29. THE CONTRACTOR IS REMINDED THAT WORK ON THIS PROJECT REQUIRES WORKING NEAR EXISTING STRUCTURES. EVERY EFFORT HAS BEEN MADE TO IDENTIFY DISCREPANCIES AND ENSURE THAT THE DETAILS ARE DEPICTED CORRECTLY. HOWEVER, SINCE THE PROJECT INVOLVES WORKING NEAR EXISTING STRUCTURES, THE CONTRACTOR CAN EXPECT AND SHOULD PLAN ON ENCOUNTERING VARIANCES AND DEVIATIONS BETWEEN THE INFORMATION FOUND IN THESE DRAWINGS AND THE EXISTING CONDITIONS. ACTUAL FIELD CONDITIONS MAY REQUIRE MODIFICATIONS IN CONSTRUCTION DETAILS AND QUANTITIES. THE CONTRACTOR IS RESPONSIBLE TO FIELD VERIFY ALL DETAILS INCLUDING GEOMETRY AND ELEVATIONS PRIOR TO THE INSTALLATION OF ANY MATERIAL. THE CONTRACTOR SHALL SUBMIT TO NCDOT AND NORFOLK SOUTHERN COPIES OF FIELD SURVEYS AND VERIFICATIONS FOR INCLUSION INTO THE CONSTRUCTION RECORDS FOR THE PROJECT.

30. ALL COSTS ASSOCIATED WITH THE TEMPORARY SPAN, INCLUDING BUT NOT LIMITED TO ERECTION, DEMOLITION/REMOVAL, PEDESTALS AND BALLAST CURBS, ALL MATERIALS (INCLUDING BUT NOT LIMITED TO STRUCTURAL STEEL, CONCRETE, REINFORCING STEEL, DECK GRATING, TRACK, TIES, MECHANICAL ANCHORS AND ANCHOR BOLTS, ETC.) AND LABOR SHALL BE INCLUDED IN THE LUMP SUM BID PRICE FOR THE "CONSTRUCTION, MAINTENANCE AND REMOVAL OF TEMPORARY SPAN". NO ADDITIONAL PAYMENT WILL BE MADE.

PROJECT NO. U-3308
DURHAM COUNTY
STATION: 24+55.20 -LALT-
13+22.18 -CSXN-
SHEET 3 OF 16

STATE OF NORTH CAROLINA
DEPARTMENT OF TRANSPORTATION
RALEIGH

TEMPORARY SPAN GENERAL NOTES

NORTH CAROLINA PROFESSIONAL SEAL 19765 ENGINEER PAUL E. KELLY, JR.
DocuSigned by: Paul E. Kelly, Jr. 26A7B5BDE2B408...
4/29/2016

REVISIONS						SHEET NO.
NO.	BY:	DATE:	NO.	BY:	DATE:	S4-55
1			3			TOTAL SHEETS
2			4			68

STV / Ralph Whitehead Associates, Inc.
900 W Trade Street, Suite 715
Charlotte, NC 28202
NC License No. F-0991

DOCUMENT NOT CONSIDERED FINAL UNLESS ALL SIGNATURES COMPLETED

DRAWN BY : MTC DATE : 06-14
CHECKED BY : DJM DATE : 06-14

pkelly 4/29/2016 12:32:37 PM I:\PROJ\25325I\ustation\struct\Temporary Span\404_054_U3308_SMU_TS03.dgn

DocuSign Envelope ID: 350CC784-7D57-4913-AD79-B3ECFB8C8DB5

TEMPORARY SPAN GENERAL NOTES

1. THE TEMPORARY SPAN HAS BEEN DESIGNED IN ACCORDANCE WITH THE REQUIREMENTS OF THE CURRENT EDITION OF AREMA'S "MANUAL FOR RAILWAY ENGINEERING, VOL. 2, STRUCTURES", AND NORFOLK SOUTHERN CORPORATION'S "UNDERPASS GRADE SEPARATION CRITERIA".

2. ASSUMED LIVE LOAD: COOPER E80 OR ALTERNATE LIVE LOAD.

3. FOR ADDITIONAL NOTES AND DESIGN DATA SEE SHEET "GENERAL DRAWING SHEET 4 OF 5". IN THE EVENT ANY NOTES CONFLICT, THE NOTES ON THIS SHEET SHALL CONTROL FOR THE TEMPORARY SPAN.

4. THE TEMPORARY SPAN HAS BEEN DESIGNED IN ACCORDANCE WITH THE REQUIREMENTS OF THE AASHTO STANDARD SPECIFICATIONS FOR SEISMIC DESIGN OF HIGHWAY BRIDGES FOR SEISMIC ZONE 1.

5. REINFORCING STEEL SHALL BE ASTM 615, GRADE 60. ALL DIMENSIONS RELATING TO BAR SPACING ARE TO BAR CENTERS UNLESS NOTED OTHERWISE. FABRICATION IS TO BE IN ACCORDANCE WITH THE "MANUAL OF STANDARD PRACTICE", ACI 315 (CURRENT EDITION). ALL REINFORCING IN THE CONCRETE DECK SLAB AND PARAPETS SHALL BE EPOXY COATED.

6. THE CONTRACTOR SHALL PROVIDE INDEPENDENT ASSURANCE SAMPLES OF REINFORCING STEEL AS FOLLOWS: FOR PROJECTS REQUIRING UP TO 400 TONS OF REINFORCING STEEL, ONE 30 INCH SAMPLE OF EACH SIZE BAR USED, AND FOR PROJECTS REQUIRING OVER 400 TONS OF REINFORCING STEEL, TWO 30 INCH SAMPLES OF EACH SIZE BAR USED. THE BARS FROM WHICH THE SAMPLES ARE TAKEN MUST THEN BE SPLICED WITH REPLACEMENT BARS OF THE SIZE AND LENGTH OF THE SAMPLE PLUS A MINIMUM LAP SPLICE OF THIRTY BAR DIAMETERS. PAYMENT FOR THE SAMPLES OF REINFORCING STEEL SHALL BE CONSIDERED INCIDENTAL TO VARIOUS PAY ITEMS.

7. ALL MATERIALS AND WORKMANSHIP SHALL BE IN ACCORDANCE WITH "STANDARD SPECIFICATIONS FOR ROADS AND STRUCTURES", JANUARY 2012, NORTH CAROLINA DEPARTMENT OF TRANSPORTATION (HEREIN CALLED STANDARD SPECIFICATIONS), EXCEPT AS NOTED HEREIN, ELSEWHERE ON PLANS, OR IN THE SPECIAL PROVISIONS. STRUCTURAL STEEL SHALL BE IN ACCORDANCE WITH CURRENT AREMA SPECIFICATIONS AND NORFOLK SOUTHERN'S "SPECIFICATIONS FOR STEEL".

8. ALL CONCRETE USED FOR THE TEMPORARY SPAN (DECK AND CURBS) SHALL BE MIN. 5,000 PSI CONCRETE, WITH NO.57 OR 67 COARSE AGGREGATE AND SHALL BE AIR-ENTRAINED. MINIMUM CEMENT PER CUBIC YARD OF CONCRETE SHALL BE 6.5 BAGS. NO SUBSTITUTION OF FLY ASH, BLAST FURNACE SLAG OR OTHER MATERIAL WILL BE PERMITTED IN MEETING THIS MINIMUM CEMENT REQUIREMENT. CHAMFER ALL EXPOSED EDGES AND CORNERS ¾" EXCEPT AS NOTED ON THE PLANS. THE USE OF GROUND GRANULATED BLAST FURNACE SLAG IS NOT PERMITTED IN THIS STRUCTURE.

9. CONTROL OF WORK: ALL WORK INVOLVED IN THE CONSTRUCTION OF THE RAILWAY STRUCTURE SHALL BE PERFORMED SATISFACTORY TO THE ENGINEER AND/OR NORFOLK SOUTHERN RAILWAY COMPANY. ALL METHODS OF HANDLING THE WORK AFFECTING THE SAFETY OF RAIL OPERATIONS MUST BE APPROVED BY THE RAILWAY COMPANY BEFORE PROCEEDING WITH THAT PORTION OF THE WORK. RAIL TRAFFIC SHALL, AT ALL TIMES, BE MAINTAINED AND PROTECTED. THE CONTRACTOR SHALL NOT AT ANY TIME DELAY OR INTERFERE WITH RAIL OPERATIONS.

10. NEEDLE BEAMS WILL NOT BE ALLOWED UNLESS OTHERWISE CALLED FOR ON THE PLANS OR APPROVED BY THE ENGINEER.

11. FOR PORTLAND CEMENT, SEE SPECIAL PROVISIONS.

12. FOR FINE AND COARSE AGGREGATE, SEE SPECIAL PROVISIONS.

13. SEE "TEMPORARY SPAN STRUCTURAL STEEL NOTES" SHEET FOR ADDITIONAL NOTES.

14. FOR RAILROAD TRACKWORK, SEE RAILROAD TRACKWORK PLANS.

15. FOR SUBMITTAL OF WORKING DRAWINGS, SEE SPECIAL PROVISIONS.

16. FOR FALSEWORK AND FORMWORK, SEE SPECIAL PROVISIONS.

17. FOR CRANE SAFETY, SEE SPECIAL PROVISIONS.

18. FOR GROUT FOR STRUCTURES, SEE SPECIAL PROVISIONS.

19. FOR CAST-IN-PLACE CONCRETE, SEE SPECIAL PROVISION FOR NORFOLK SOUTHERN SPECIFICATIONS FOR CAST-IN-PLACE CONCRETE.

20. PAINTING STRUCTURAL STEEL OF THE TEMPORARY SPAN IS NOT REQUIRED.

21. FOR PROTECTION OF RAILWAY INTERESTS, SEE SPECIAL PROVISIONS.

22. FOR RAILROAD ROADBED, SEE RAILROAD ROADBED SPECIAL PROVISIONS.

23. FOR MAINTENANCE AND PROTECTION OF TRAFFIC BENEATH PROPOSED STRUCTURE, SEE SPECIAL PROVISIONS.

24. SHOCK PADS SHALL BE PREFORMED FABRIC BEARING PADS, ½" THICK, AND SHALL BE EITHER SHOCK PAD STYLE 15175, AS MANUFACTURED BY THE ALERT MANUFACTURING AND SUPPLY COMPANY, CHICAGO, IL; OR FABREEKA PADS, AS MANUFACTURED BY THE FABREEKA PRODUCTS COMPANY, BOSTON, MA; OR SORBTEX PADS, AS MANUFACTURED BY VOSS ENGINEERING, INC., CHICAGO, IL; OR AN APPROVED EQUAL.

25. ALL CONSTRUCTION JOINTS SHOWN ON THESE PLANS SHALL BE REQUIRED UNLESS SHOWN OPTIONAL. CONSTRUCTION JOINTS SHALL NOT BE PERMITTED EXCEPT AS SHOWN ON THE PLANS, OR WHERE WRITTEN APPROVAL HAS BEEN OBTAINED.

26. BENCHMARK: SEE LOCATION SKETCH.

27. DIRECT TENSION INDICATORS (DTI) WILL NOT BE PERMITTED. USE THE TURN-OF-NUT METHOD FOR INSTALLING AND TIGHTENING HIGH STRENGTH BOLTS. SEE SPECIAL PROVISION FOR TURN-OF-NUT TIGHTENING.

28. THE RAILROAD TRACK TOP OF RAIL ELEVATIONS ON THE PLANS ARE FROM THE BEST INFORMATION AVAILABLE. PRIOR TO BEGINNING BRIDGE CONSTRUCTION, VERIFY THE TOP OF RAIL ELEVATIONS AND REPORT ANY VARIATIONS TO THE ENGINEER. ANY PLAN REVISIONS NECESSARY TO ACHIEVE THE REQUIRED MINIMUM CLEARANCE WILL BE PROVIDED BY THE DEPARTMENT.

29. THE CONTRACTOR IS REMINDED THAT WORK ON THIS PROJECT REQUIRES WORKING NEAR EXISTING STRUCTURES. EVERY EFFORT HAS BEEN MADE TO IDENTIFY DISCREPANCIES AND ENSURE THAT THE DETAILS ARE DEPICTED CORRECTLY. HOWEVER, SINCE THE PROJECT INVOLVES WORKING NEAR EXISTING STRUCTURES, THE CONTRACTOR CAN EXPECT AND SHOULD PLAN ON ENCOUNTERING VARIANCES AND DEVIATIONS BETWEEN THE INFORMATION FOUND IN THESE DRAWINGS AND THE EXISTING CONDITIONS. ACTUAL FIELD CONDITIONS MAY REQUIRE MODIFICATIONS IN CONSTRUCTION DETAILS AND QUANTITIES. THE CONTRACTOR IS RESPONSIBLE TO FIELD VERIFY ALL DETAILS INCLUDING GEOMETRY AND ELEVATIONS PRIOR TO THE INSTALLATION OF ANY MATERIAL. THE CONTRACTOR SHALL SUBMIT TO NCDOT AND NORFOLK SOUTHERN COPIES OF FIELD SURVEYS AND VERIFICATIONS FOR INCLUSION INTO THE CONSTRUCTION RECORDS FOR THE PROJECT.

30. ALL COSTS ASSOCIATED WITH THE TEMPORARY SPAN, INCLUDING BUT NOT LIMITED TO ERECTION, DEMOLITION/REMOVAL, PEDESTALS AND BALLAST CURBS, ALL MATERIALS (INCLUDING BUT NOT LIMITED TO STRUCTURAL STEEL, CONCRETE, REINFORCING STEEL, DECK GRATING, TRACK, TIES, MECHANICAL ANCHORS AND ANCHOR BOLTS, ETC.) AND LABOR SHALL BE INCLUDED IN THE LUMP SUM BID PRICE FOR THE "CONSTRUCTION, MAINTENANCE AND REMOVAL OF TEMPORARY SPAN". NO ADDITIONAL PAYMENT WILL BE MADE.

PROJECT NO. U-3308
DURHAM COUNTY
STATION: 24+55.20 -LALT-
13+22.18 -CSXN-
SHEET 3 OF 16

STATE OF NORTH CAROLINA
DEPARTMENT OF TRANSPORTATION
RALEIGH

TEMPORARY SPAN GENERAL NOTES

NORTH CAROLINA PROFESSIONAL SEAL 19765 ENGINEER PAUL E. KELLY, JR.
DocuSigned by: Paul Kelly Jr. 26ADE850B9A4A8...
7/7/2016

STV / Ralph Whitehead Associates, Inc.
900 W Trade Street, Suite 715
Charlotte, NC 28202
NC License No. F-0991

REVISIONS						SHEET NO.
NO.	BY:	DATE:	NO.	BY:	DATE:	S4-55
1			3			TOTAL SHEETS
2			4			68

DRAWN BY : MTC DATE : 06-14
CHECKED BY : DJM DATE : 06-14

pkelly 7/7/2016 1:47:15 PM I:\PROJ\25325\ustation\struct\Temporary Span\up_404_054_U3308_SMU_TS03.dgn

DocuSign Envelope ID: 48A27C4D-A37A-43BA-95EE-BF2D2CDF1FAD

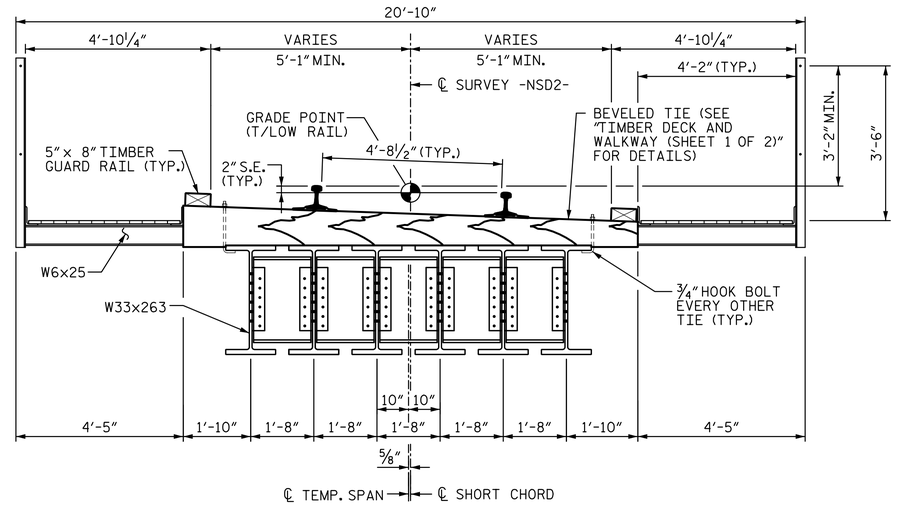

TEMPORARY SPAN TYPICAL SECTION

(FOR TEMPORARY SPAN ALONG -NSD2- TRACK)
(SIMPLE SPAN NON-COMPOSITE ASTM A-709 GRADE 50 W33x263 ROLLED BEAMS)

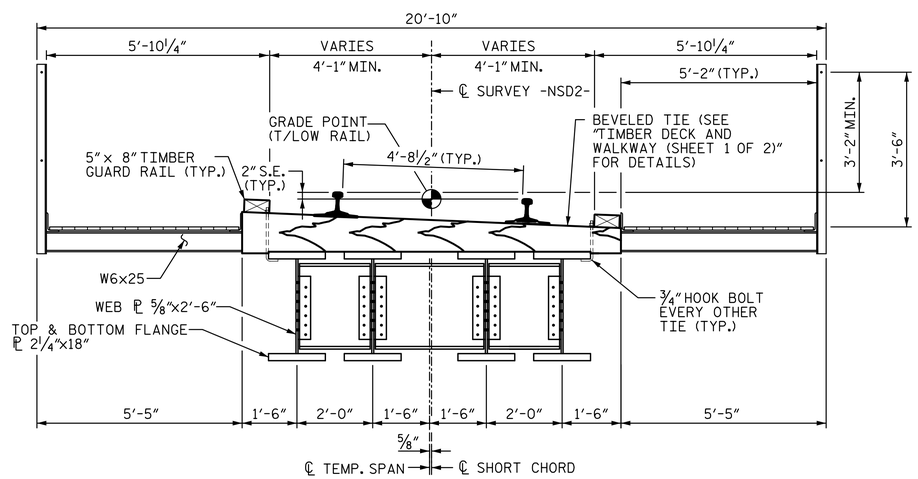

TEMPORARY SPAN TYPICAL SECTION - ALTERNATE

(FOR TEMPORARY SPAN ALONG -NSD2- TRACK)
(SIMPLE SPAN NON-COMPOSITE ASTM A-709 GRADE 50 PLATE GIRDERS)

NOTE: THE ALTERNATE CONFIGURATION HAS BEEN PROVIDED AS AN ACCEPTABLE ALTERNATIVE TO THE TEMPORARY SPAN AS DETAILED IN THESE PLANS. SHOULD THE CONTRACTOR CHOOSE TO USE THE ALTERNATE, THE APPLICABLE TEMPORARY SPAN PLAN SHEETS SHALL BE UPDATED, SIGNED AND SEALED BY A LICENSED AND REGISTERED ENGINEER AND SUBMITTED FOR APPROVAL TO THE DEPARTMENT AND RAILROADS PRIOR TO BEGINNING CONSTRUCTION. ALL COSTS ASSOCIATED WITH THE ALTERNATE DESIGN AND PLAN SUBMITTAL SHALL BE INCLUDED IN THE LUMP SUM BID PRICE FOR THE TEMPORARY SPAN. NO ADDITIONAL MEASUREMENT OR PAYMENT WILL BE MADE.

PROJECT NO. U-3308
DURHAM COUNTY
STATION: 24+55.20 -LALT-
13+22.18 -CSXN-
SHEET 4 OF 16

STATE OF NORTH CAROLINA
DEPARTMENT OF TRANSPORTATION
RALEIGH

TEMPORARY SPAN TYPICAL SECTIONS

DocuSign Envelope ID: 48A27C4D-A37A-43BA-95EE-BF2D2CDF1FAD
NORTH CAROLINA PROFESSIONAL SEAL 19765 ENGINEER PAUL E. KELLY, JR.
4/29/2016

REVISIONS								SHEET NO.
NO.	BY:	DATE:	NO.	BY:	DATE:			S4-56
1			3					TOTAL SHEETS
2			4					68

STV / Ralph Whitehead Associates, Inc.
900 W Trade Street, Suite 715
Charlotte, NC 28202
NC License No. F-0991

DOCUMENT NOT CONSIDERED FINAL UNLESS ALL SIGNATURES COMPLETED

DRAWN BY : MTC DATE : 06-14
CHECKED BY : DJM DATE : 06-14

pkelly I:\PROJ\25\325\ustation\struct\Temporary Span\404_055_U3308_SMU_TS04.dgn 12:32:40 PM 4/29/2016

DocuSign Envelope ID: 48A27C4D-A37A-43BA-95EE-BF2D2CDF1FAD

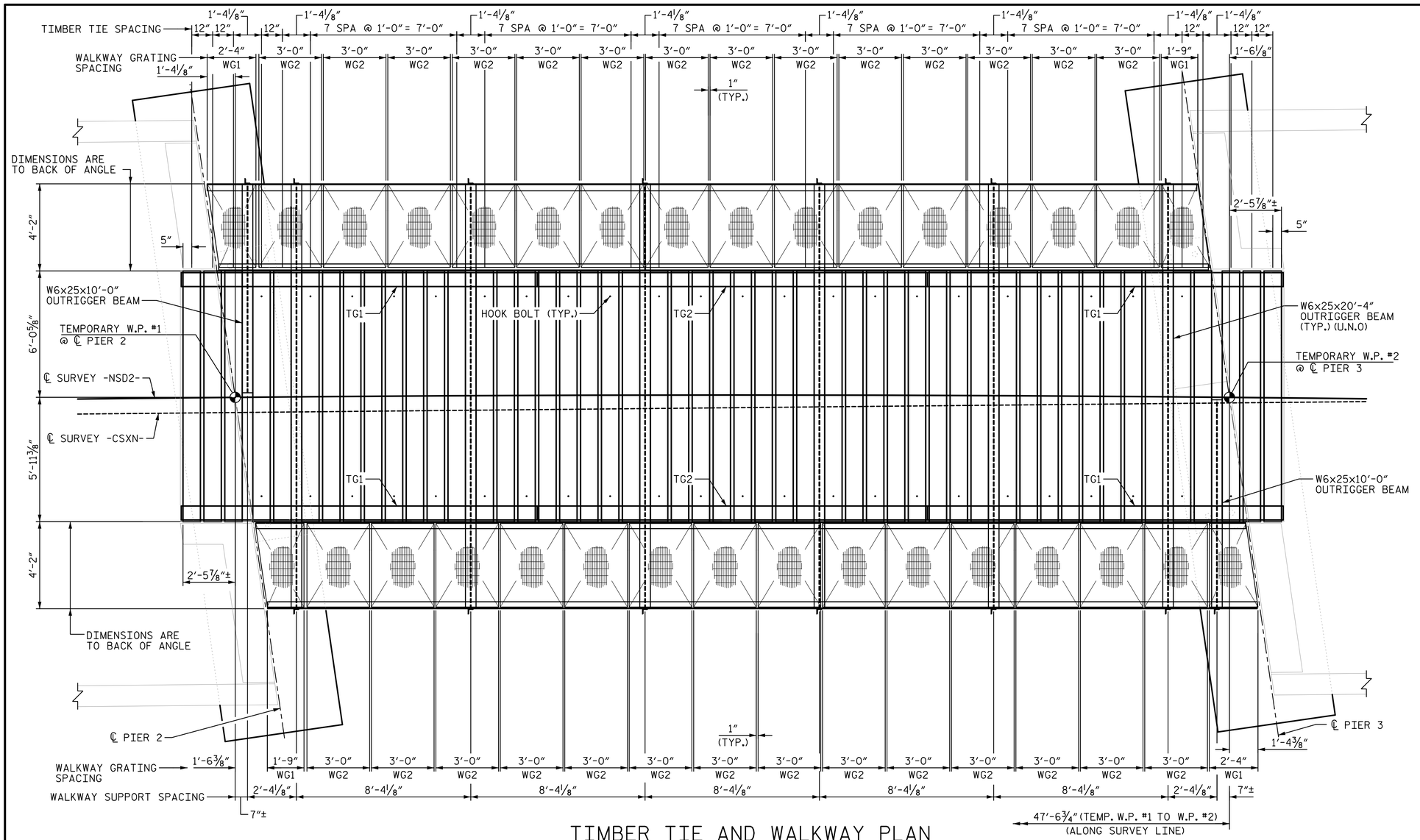

TIMBER TIE AND WALKWAY PLAN

NOTES:

1. FOR TEMPORARY SPAN GENERAL NOTES, SEE SHEET TITLED "TEMPORARY SPAN GENERAL NOTES".
2. FOR TEMPORARY SPAN STRUCTURAL STEEL DETAILS, SEE SHEETS TITLED "TEMPORARY SPAN STRUCTURAL STEEL DETAILS".
3. FOR ADDITIONAL NOTES AND DETAILS, SEE SHEET TITLED "TIMBER DECK AND WALKWAY DETAILS (SHEET 2 OF 2)"
4. FOR ALTERNATE TEMPORARY SPAN, USE 10" X 8" MIN. X 10'-0" TIES WITH 5'-0" GRATING.

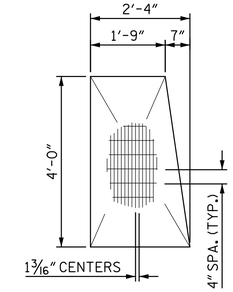

WG1

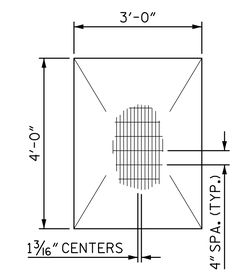

WG2

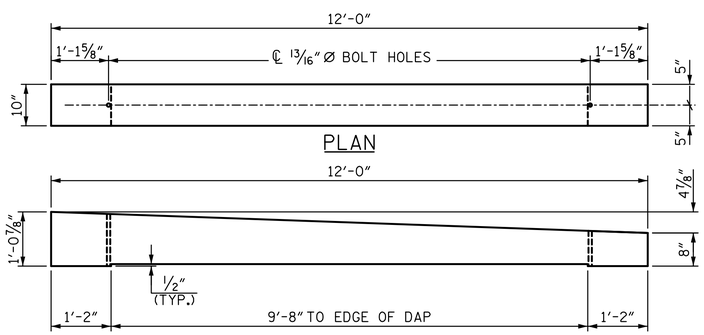

PLAN

ELEVATION

TIMBER BRIDGE TIE

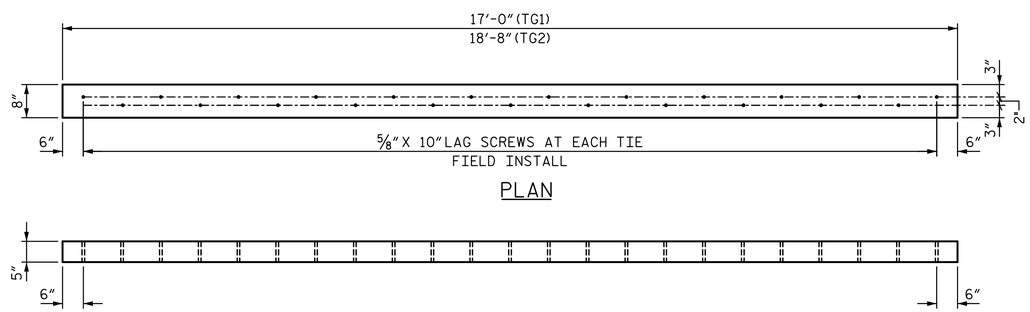

PLAN

ELEVATION

TIMBER GUARDRAIL

NOTES TO TIMBER FABRICATOR:

1. TIMBERS ARE TO BE FRAMED TO DIMENSIONS AND DETAILS AS SHOWN BEFORE TREATING AND MARKED AS SHOWN.
2. TIMBER TIES ARE TO BE LAID OFF FROM THE SQUARE END AND MARKED ON SAME END.
3. TIMBER TIES MUST BE STRAIGHT AND TRUE.

NORTH CAROLINA PROFESSIONAL SEAL 19765 ENGINEER PAUL E. KELLY, JR. 4/29/2016

PROJECT NO. U-3308
DURHAM COUNTY
STATION: 24+55.20 -LALT-
13+22.18 -CSXN-
SHEET 5 OF 16

STATE OF NORTH CAROLINA
DEPARTMENT OF TRANSPORTATION
RALEIGH

TIMBER DECK AND WALKWAY DETAILS (SHEET 1 OF 2)

REVISIONS								SHEET NO.
NO.	BY:	DATE:	NO.	BY:	DATE:			S4-57
1			3					TOTAL SHEETS
2			4					68

DRAWN BY : NMC DATE : 06-14
CHECKED BY : DJM DATE : 06-14

DOCUMENT NOT CONSIDERED FINAL UNLESS ALL SIGNATURES COMPLETED

STV / Ralph Whitehead Associates, Inc.
900 W Trade Street, Suite 715
Charlotte, NC 28202
NC License No. F-0991

pkelly 4/29/2016 12:32:43 PM I:\PROJ\25325\ustation\struct\Temporary Span\404_056_U3308_SMU_TS05.dgn

DocuSign Envelope ID: 48A27C4D-A37A-43BA-95EE-BF2D2CDF1FAD

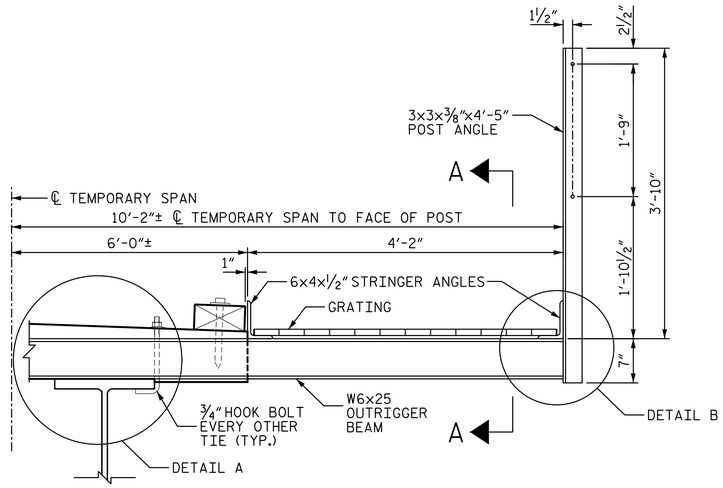

TYPICAL WALKWAY SECTION

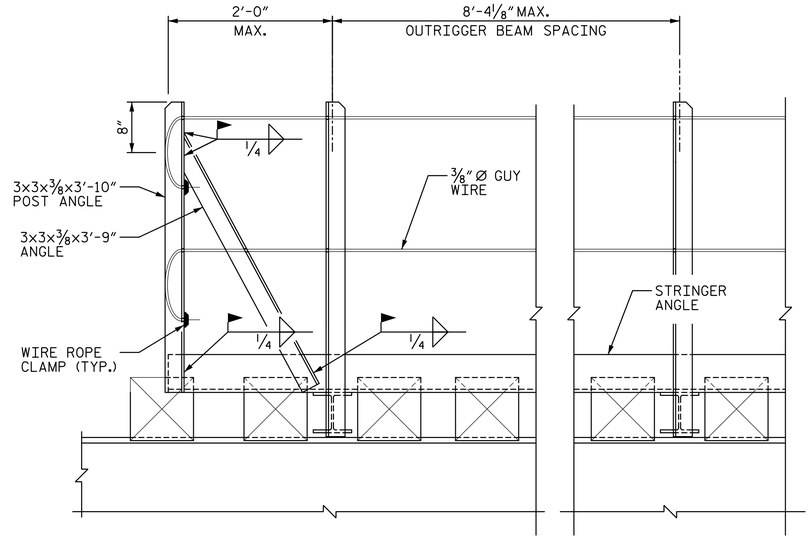

ELEVATION AT TEMPORARY SPAN ENDS

TIMBER DECK AND WALKWAY QUANTITIES

ITEMS	UNIT	QUANTITY
W6X25 OUTRIGGER BEAM	LBS.	3550
L6X4X½ STRINGER	LBS.	3176
L3X3X⅜ POSTS AND END BRACE	LBS.	664
WALKWAY GRATING	LBS.	2775
8"MIN. X 10"X 12'-0" TIE	EA.	27
8"MIN. X 10"X 12'-0" TIE W/ HOOK BOLT	EA.	23
5"X 8" TIMBER GUARD RAIL	LF.	105.3

TIMBER DECK AND WALKWAY QUANTITIES - ALTERNATE

ITEMS	UNIT	QUANTITY
W6X25 OUTRIGGER BEAM	LBS.	3550
L6X4X½ STRINGER	LBS.	3176
L3X3X⅜ POSTS AND END BRACE	LBS.	664
WALKWAY GRATING	LBS.	3440
8"MIN. X 10"X 10'-0" TIE	EA.	27
8"MIN. X 10"X 12'-0" TIE W/ HOOK BOLT	EA.	23
5"X 8" TIMBER GUARD RAIL	LF.	105.3

NOTES:

1. FOR TEMPORARY SPAN GENERAL NOTES, SEE SHEET TITLED "TEMPORARY SPAN GENERAL NOTES".
2. FOR TEMPORARY SPAN STRUCTURAL STEEL DETAILS, SEE SHEETS TITLED "TEMPORARY SPAN STRUCTURAL STEEL DETAILS".
3. FOR ADDITIONAL NOTES AND DETAILS, SEE SHEET TITLED "TIMBER DECK AND WALKWAY DETAILS (1 OF 2)".
4. FOR ALTERNATE TEMPORARY SPAN, SEE SHEET TITLED "TEMPORARY SPAN TYPICAL SECTION"

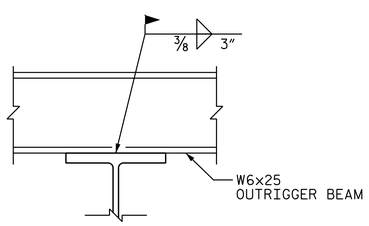

DETAIL A

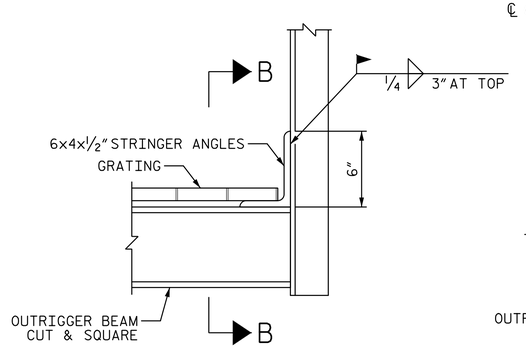

DETAIL B

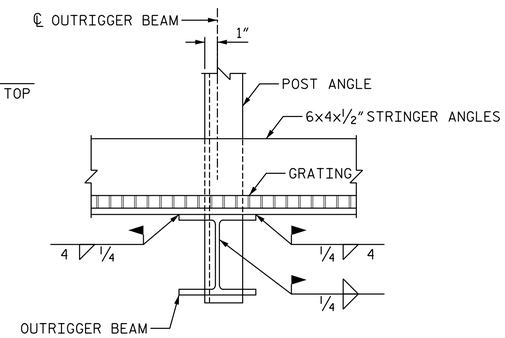

SECTION B-B

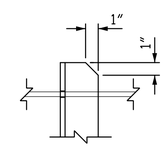

TYPICAL POST ANGLE CLIP

TIMBER TIE DECK GENERAL NOTES:

SPECIFICATIONS: AREMA CHAPTER 7, "TIMBER STRUCTURES" AND ANY CSXT OR NORFOLK SOUTHERN STANDARD PROCEDURES, AND AS AMENDED OR MODIFIED ON THESE PLANS.

DESIGN LOADS: COOPER E80 LIVE LOAD

TIMBER: TIMBER TIES AND GUARDRAIL SHALL BE CREOSOTE TREATED SOUTHERN YELLOW PINE, DENSE STRUCTURAL 65, LUMBER OF THE SOUTHERN PINE INSPECTION BUREAU.

FASTENERS: BOLTS, WASHERS, LAG SCREWS, ETC. SHALL BE IN ACCORDANCE WITH AREMA 7.1.6 "SPECIFICATION OF FASTENERS FOR TIMBER TRESTLES".

TIMBER GUARDRAIL: GUARDRAILS SHALL BE FASTENED TO EACH TIMBER BRIDGE TIE.

TIE ANCHORAGE: THE TIMBER TIES SHALL BE FASTENED TO THE BEAM FLANGES WITH ¾" DIA. HOOK BOLTS, OR EQUAL AT EVERY OTHER TIE. TIMBER TIES SHALL BE DAPPED TO FIT TOP FLANGES OF BEAM AS SHOWN ON SHEET TITLED "TIMBER DECK AND WALKWAY DETAILS (1 OF 2)".

WALKWAY: WALKWAY GRATING SHALL BE RECTANGULAR WELDED GRATING MADE OF ASTM A569 STEEL, HOT DIPPED GALVANIZED IN ACCORDANCE WITH ASTM A123 AFTER FABRICATION. BEARING BARS ARE TO BE 1" X ⅛" AT 1 3/16" CENTERS, AND TWISTED SQ. BARS AT 4" CENTERS. HANDRAIL POST SHALL BE MADE OF ASTM A36 STEEL, HOT DIPPED GALVANIZED IN ACCORDANCE WITH ASTM A123 AFTER FABRICATION. GUY WIRE SHALL BE ⅜" DIA. GALVANIZED WIRE ROPE ANCHORED WITH GALVANIZED WIRE ROPE CLIPS (GALV. MALLEABLE IRON HEAVY DUTY CROSBY CLIPS AND ROPE THIMBLE).

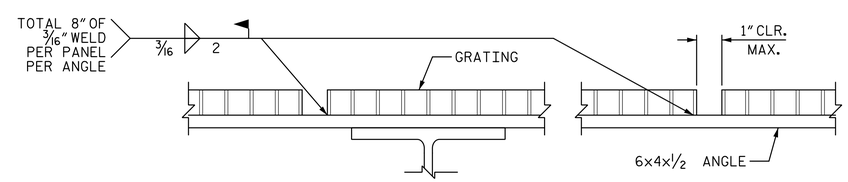

SECTION A-A

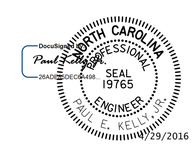

PROJECT NO. U-3308

DURHAM COUNTY

STATION: 24+55.20 -LALT-
13+22.18 -CSXN-

SHEET 6 OF 16

STATE OF NORTH CAROLINA
DEPARTMENT OF TRANSPORTATION
RALEIGH

TIMBER DECK AND WALKWAY DETAILS (SHEET 2 OF 2)

REVISIONS								SHEET NO.
NO.	BY:	DATE:	NO.	BY:	DATE:			S4-58
1			3					TOTAL SHEETS
2			4					68

DRAWN BY : NMC DATE : 06-14
CHECKED BY : DJM DATE : 06-14

DOCUMENT NOT CONSIDERED FINAL UNLESS ALL SIGNATURES COMPLETED

STV / Ralph Whitehead Associates, Inc.
900 W Trade Street, Suite 715
Charlotte, NC 28202
NC License No. F-0991

pkelly I:\PROJ\25325\ustation\struct\Temporary Span\404_057_U3308_SMU_TS06.dgn 4/29/2016 12:32:45 PM

DocuSign Envelope ID: 48A27C4D-A37A-43BA-95EE-BF2D2CDF1FAD

NOTES:

1. FOR ADDITIONAL HANDRAIL DETAILS, SEE SHEET TITLED "HANDRAIL DETAILS".
2. FOR LOCATION OF HANDRAIL, SEE SHEETS TITLED "TEMPORARY CONCRETE PEDESTAL AND BALLAST RETAINER".
3. ½" ELASTOMERIC PAD SHALL BE SIZED TO THE FULL PLAN DIMENSIONS OF THE TEMPORARY CONCRETE PEDESTAL (MK. C1 AND C2).

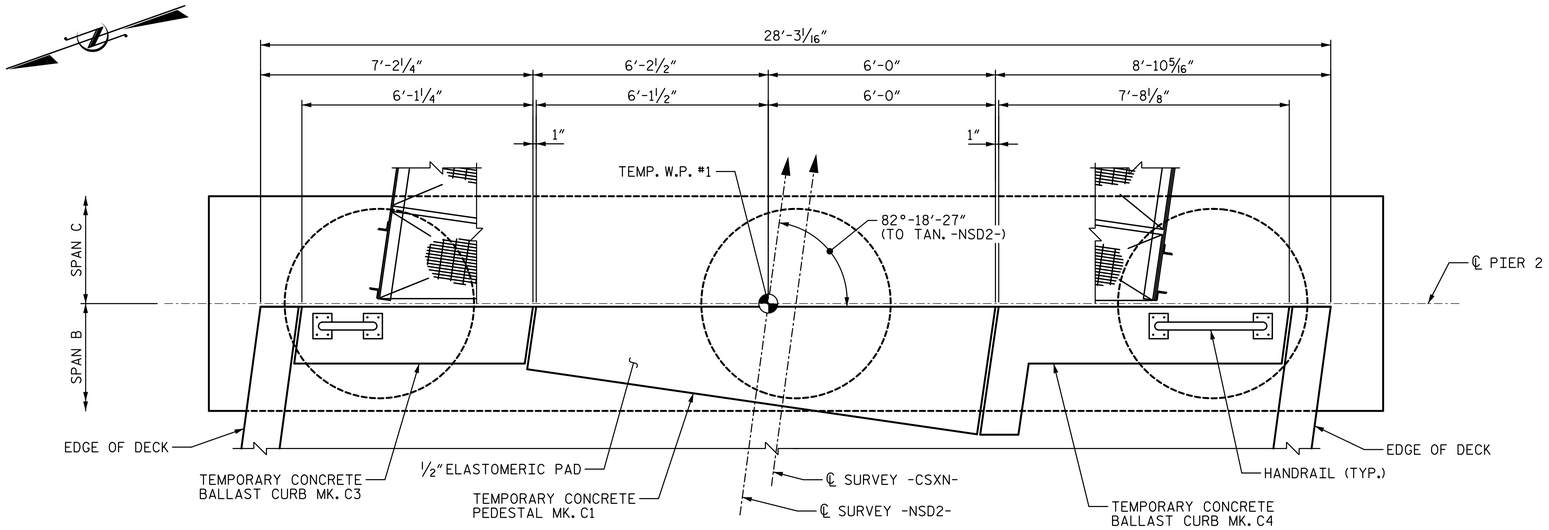

PLAN VIEW - TEMPORARY CONCRETE PEDESTAL AND BALLAST RETAINER AT PIER 2

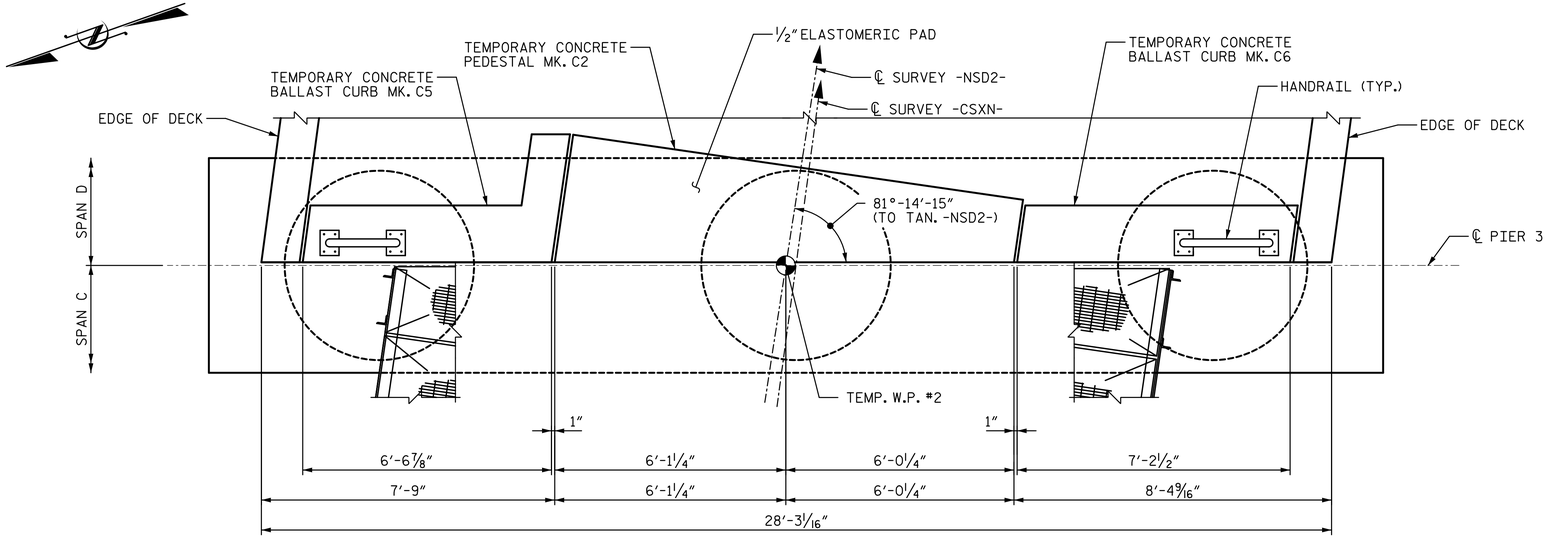

PLAN VIEW - TEMPORARY CONCRETE PEDESTAL AND BALLAST RETAINER AT PIER 3

CIP CONCRETE PEDESTAL & BALLAST CURB INSTALLATION SEQUENCE

1. PLACE FELT FABRIC ON EXISTING PIER CAP.
2. INSTALL MECHANICAL ANCHORS AND ANCHOR BLOCKOUT, SEE ANCHOR BOLT DETAIL ON SHEET TITLED "TEMPORARY CONCRETE PEDESTAL AND BALLAST RETAINER (4 OF 4)" FOR ANCHOR INFORMATION.
3. FORM CIP CONCRETE PEDESTAL, BALLAST CURB, BLOCKOUTS, ETC.
4. PLACE CONCRETE AND FINISH TO SPECIFIED ELEVATIONS AND INSTALL ANCHOR BOLTS.
5. REMOVE FORMS.
6. INSTALL HANDRAILS ON TEMPORARY CONCRETE BALLAST CURBS.
7. PLACE ½" ELASTOMERIC PAD ON TEMPORARY CONCRETE PEDESTAL.
8. INSTALL TEMPORARY SPAN AND TRACK.
9. AFTER COMPLETION OF NSRR BRIDGE, REMOVE TEMPORARY SPAN AND TRACK.
10. REMOVE ANCHOR BOLTS, CIP COMPONENTS AND FELT FABRIC.

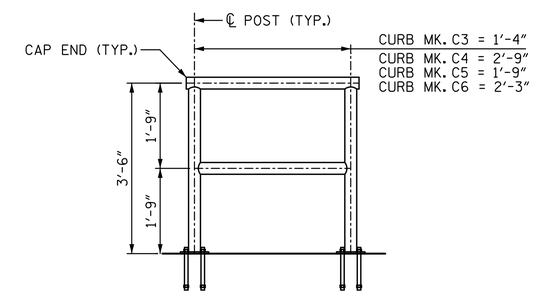

TEMPORARY BALLAST CURB HANDRAIL DETAIL

PROJECT NO. U-3308

DURHAM COUNTY

STATION: 24+55.20 -LALT-
13+22.18 -CSXN-

SHEET 7 OF 16

STATE OF NORTH CAROLINA
DEPARTMENT OF TRANSPORTATION
RALEIGH

TEMPORARY CONCRETE PEDESTAL AND BALLAST RETAINER (1 OF 4)

NORTH CAROLINA PROFESSIONAL SEAL 19765 ENGINEER PAUL E. KELLY, JR. 4/29/2016

REVISIONS							SHEET NO.
NO.	BY:	DATE:	NO.	BY:	DATE:		S4-59
1			3				TOTAL SHEETS
2			4				68

DRAWN BY : MTC DATE : 06-14
CHECKED BY : DJM DATE : 06-14

DOCUMENT NOT CONSIDERED FINAL UNLESS ALL SIGNATURES COMPLETED

STV / Ralph Whitehead Associates, Inc.
900 W Trade Street, Suite 715
Charlotte, NC 28202
NC License No. F-0991

pkelly 4/29/2016 12:32:48 PM I:\PROJ\25325\ustation\struct\Temporary Span\404_058_U3308_SMU_TS07.dgn

DocuSign Envelope ID: 48A27C4D-A37A-43BA-95EE-BF2D2CDF1FAD

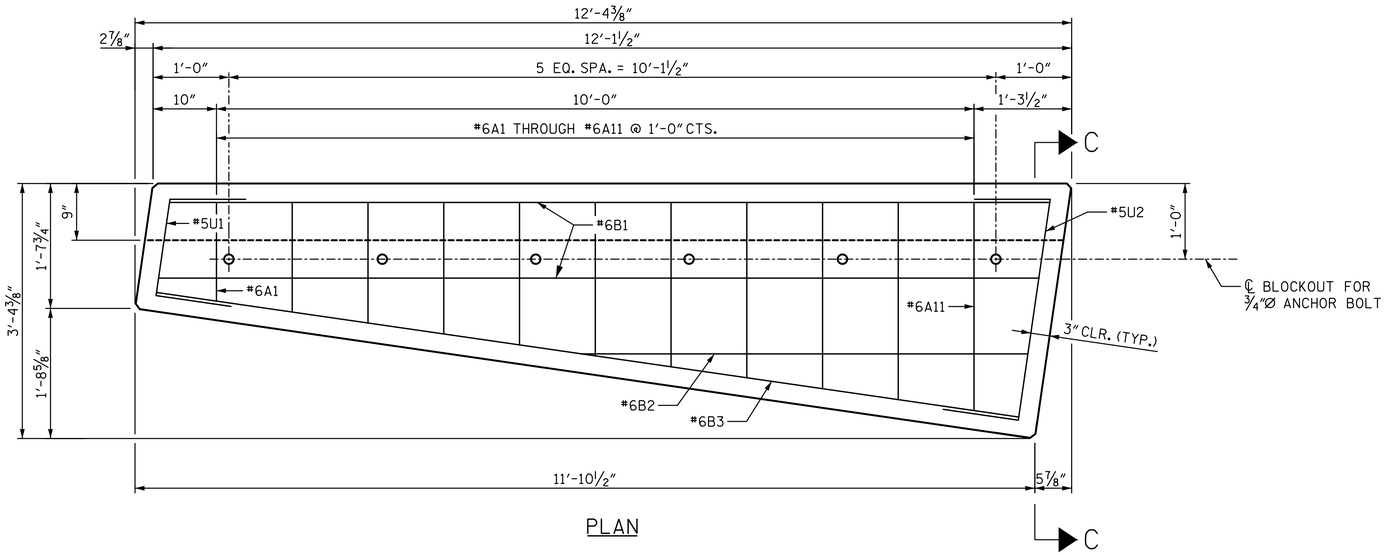

PLAN

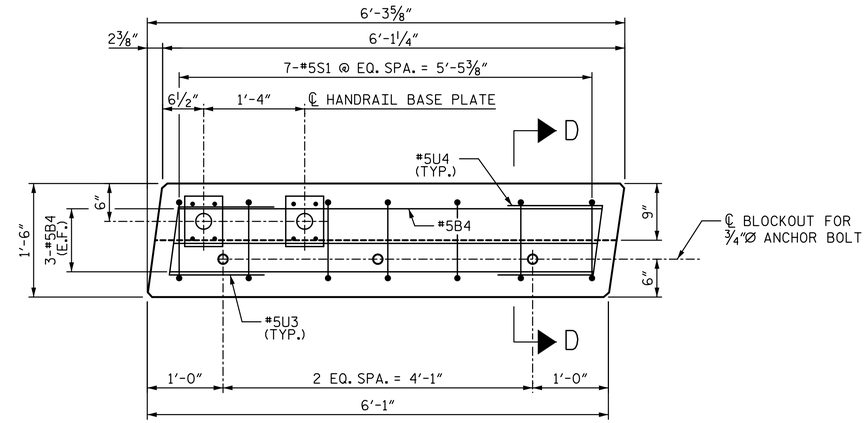

PLAN

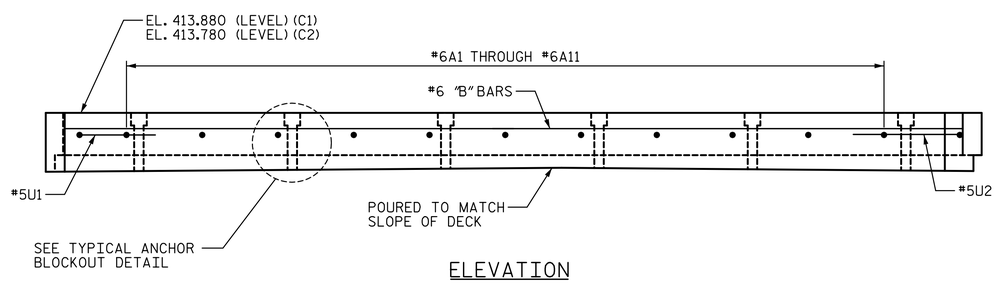

ELEVATION

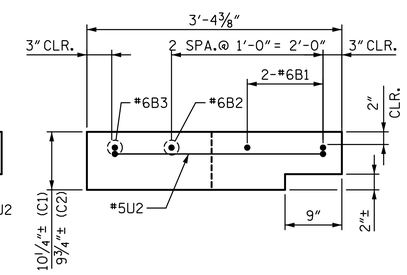

SECTION C-C

TYPICAL CONCRETE PEDESTAL MK. C1 & C2

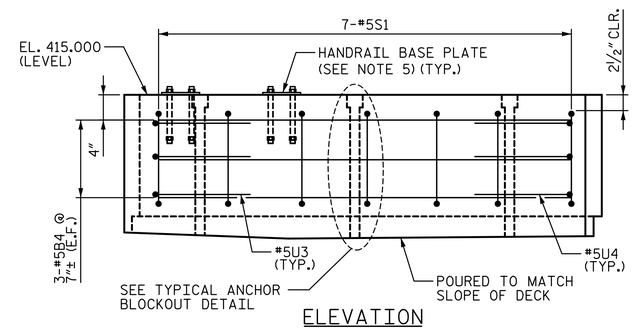

ELEVATION

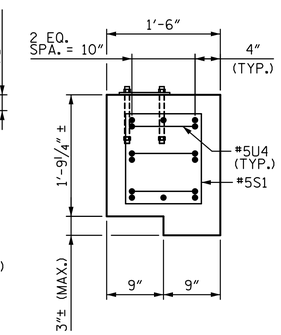

SECTION D-D

CONCRETE BALLAST CURB MK. C3

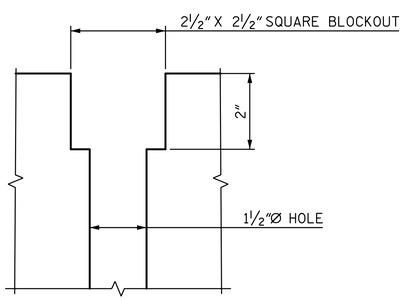

TYPICAL ANCHOR BLOCKOUT DETAIL

NOTES:

1. ALL BLOCKOUT HOLES PASS THROUGH FULL DEPTH OF PEDESTAL OR BALLAST CURB.
2. PREFORMED 1½″Ø HOLES FOR ANCHOR BOLTS SHALL BE FORMED WITH PERMANENT CORRUGATED METAL DUCTS MADE FROM 26 GAUGE STRIP STEEL CONFORMING TO ASTM A 65M, G90 COATING WEIGHT, OR APPROVED EQUAL.
3. SEE SHEET TITLED "TEMPORARY CONCRETE PEDESTAL AND BALLAST RETAINER (4 OF 4) FOR ANCHOR BOLT DETAIL.
4. CONTRACTOR MAY ADJUST REINFORCEMENT SLIGHTLY AS NECESSARY TO AVOID BLOCKOUTS AND HANDRAIL BASE PLATE/ANCHOR BOLTS.
5. ANCHOR RODS FOR BASE PLATE SHALL BE CAST-IN-PLACE WITH THE BALLAST CURB. FOR BASE PLATE AND ANCHOR ROD DETAILS, SEE SHEET TITLED "HANDRAIL DETAILS".
6. FOR HANDRAIL DETAILS, SEE SHEETS TITLED "TEMPORARY CONCRETE PEDESTAL AND BALLAST RETAINER (1 OF 4)" AND "HANDRAIL DETAILS".
7. CHAMFER EDGES ¾″ X ¾″.
8. 3″ COVER U.N.O.
9. FOR ADDITIONAL NOTES, SEE SHEET TITLED "TEMPORARY CONCRETE PEDESTAL AND BALLAST RETAINER (1 OF 4)".

PROJECT NO. U-3308
DURHAM COUNTY
STATION: 24+55.20 -LALT-
13+22.18 -CSXN-
SHEET 8 OF 16

STATE OF NORTH CAROLINA
DEPARTMENT OF TRANSPORTATION
RALEIGH

TEMPORARY CONCRETE PEDESTAL AND BALLAST RETAINER (2 OF 4)

Docu Sign Envelope ID: 26D85DBF-D6B8-4... Pat... NORTH CAROLINA PROFESSIONAL SEAL 19765 ENGINEER PAUL E. KELLY, JR. 4/29/2016

REVISIONS							SHEET NO.
NO.	BY:	DATE:	NO.	BY:	DATE:		S4-60
1			3				TOTAL SHEETS
2			4				68

DRAWN BY : MTC DATE : 06-14
CHECKED BY : DJM DATE : 06-14

DOCUMENT NOT CONSIDERED FINAL UNLESS ALL SIGNATURES COMPLETED

STV / Ralph Whitehead Associates, Inc.
900 W Trade Street, Suite 715
Charlotte, NC 28202
NC License No. F-0991

pkelly 4/29/2016 12:32:50 PM I:\PROJ\25325\ustation\struct\Temporary Span\404_059_U3308_SMU_TS08.dgn

DocuSign Envelope ID: 48A27C4D-A37A-43BA-95EE-BF2D2CDF1FAD

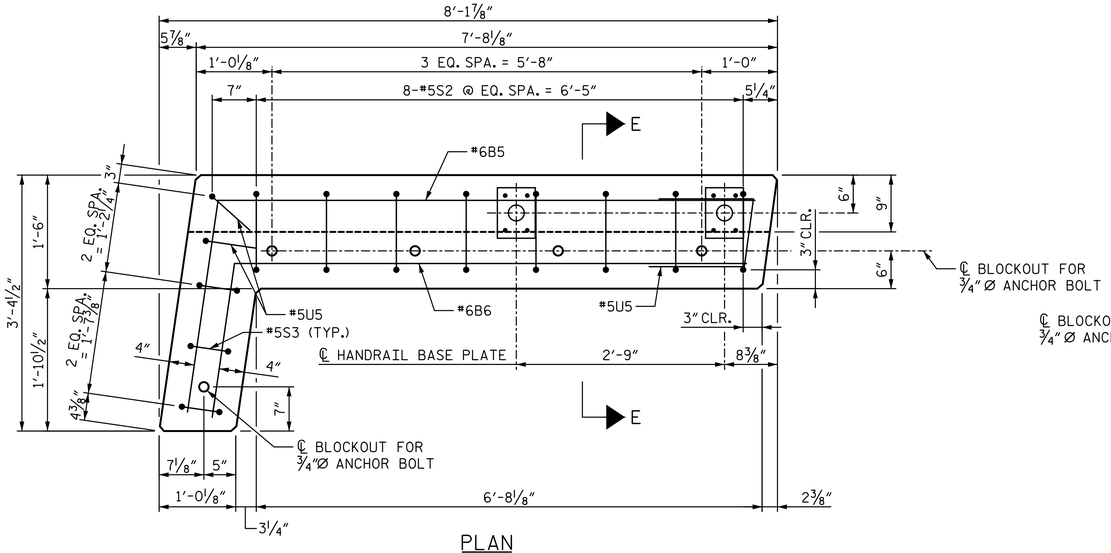

PLAN

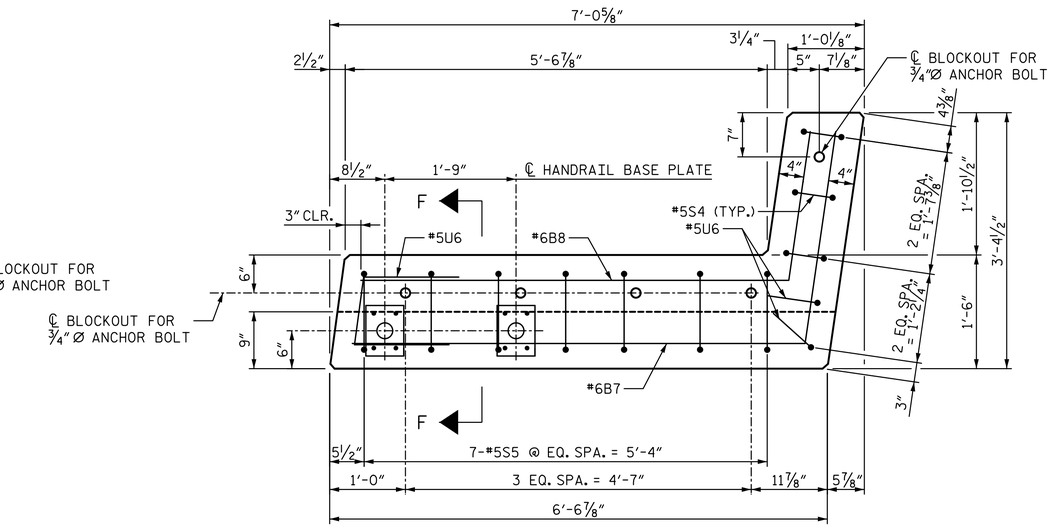

PLAN

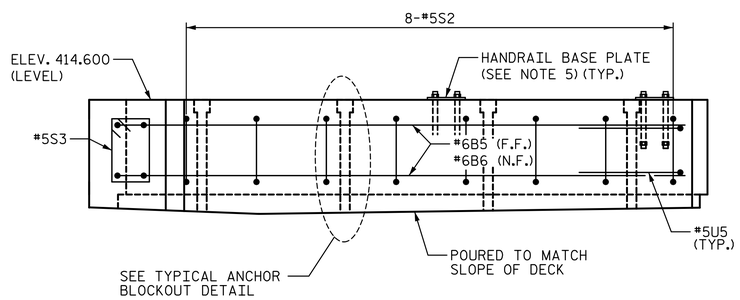

ELEVATION

(SOME REINFORCEMENT NOT SHOWN FOR CLARITY)

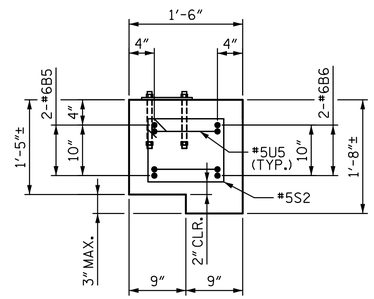

SECTION E-E

CONCRETE BALLAST CURB MK. C4

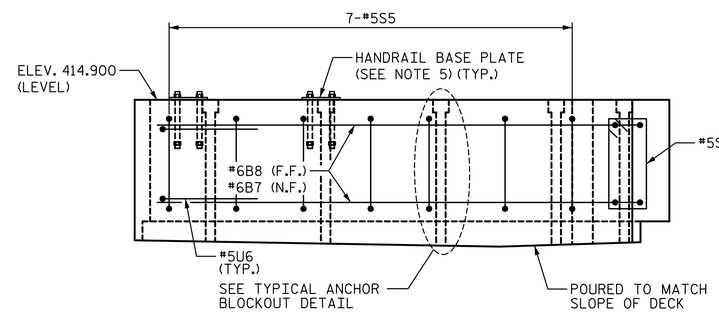

ELEVATION

(SOME REINFORCEMENT NOT SHOWN FOR CLARITY)

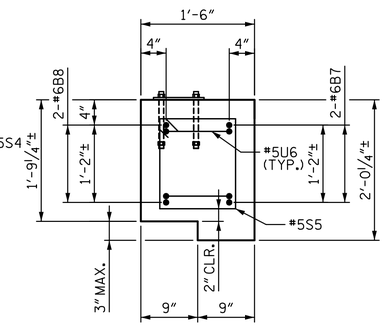

SECTION F-F

CONCRETE BALLAST CURB MK. C5

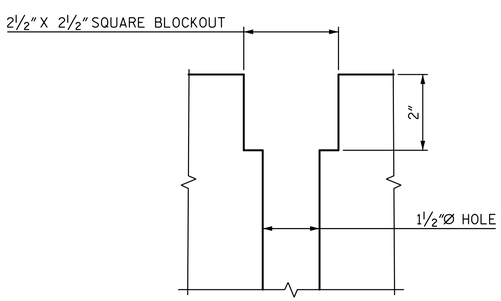

TYPICAL ANCHOR BLOCKOUT DETAIL

NOTES:

1. ALL BLOCKOUT HOLES PASS THROUGH FULL DEPTH OF PEDESTAL OR BALLAST CURB.
2. PREFORMED 1½"Ø HOLES FOR ANCHOR BOLTS SHALL BE FORMED WITH PERMANENT CORRUGATED METAL DUCTS MADE FROM 26 GAUGE STRIP STEEL CONFORMING TO ASTM A 65M, G90 COATING WEIGHT, OR APPROVED EQUAL.
3. SEE SHEET TITLED "TEMPORARY CONCRETE PEDESTAL AND BALLAST RETAINER (4 OF 4) FOR ANCHOR BOLT DETAIL.
4. CONTRACTOR MAY ADJUST REINFORCEMENT SLIGHTLY AS NECESSARY TO AVOID BLOCKOUTS AND HANDRAIL BASE PLATE/ANCHOR BOLTS.
5. ANCHOR RODS FOR BASE PLATE SHALL BE CAST-IN-PLACE WITH THE BALLAST CURB. FOR BASE PLATE AND ANCHOR RODS DETAILS, SEE SHEET TITLED "HANDRAIL DETAILS".
6. FOR HANDRAIL DETAILS, SEE SHEETS TITLED "TEMPORARY CONCRETE PEDESTAL AND BALLAST RETAINER (1 OF 4)" AND "HANDRAIL DETAILS".
7. CHAMFER EDGES ¾" X ¾".
8. 3" COVER U.N.O.
9. FOR ADDITIONAL NOTES, SEE SHEET TITLED "TEMPORARY CONCRETE PEDESTAL AND BALLAST RETAINER (1 OF 4)".

PROJECT NO. U-3308
DURHAM COUNTY
STATION: 24+55.20 -LALT-
13+22.18 -CSXN-
SHEET 9 OF 16

STATE OF NORTH CAROLINA
DEPARTMENT OF TRANSPORTATION
RALEIGH

TEMPORARY CONCRETE PEDESTAL AND BALLAST RETAINER (3 OF 4)

DocuSigned by: Paul E. Kelly Jr. 26A2B3DDE2F4B0... NORTH CAROLINA PROFESSIONAL SEAL 19765 ENGINEER PAUL E. KELLY, JR. 4/29/2016

REVISIONS						
NO.	BY:	DATE:	NO.	BY:	DATE:	
1			3			
2			4			

SHEET NO. S4-61
TOTAL SHEETS 68

DRAWN BY : MTC DATE : 06-14
CHECKED BY : DJM DATE : 06-14

DOCUMENT NOT CONSIDERED FINAL UNLESS ALL SIGNATURES COMPLETED

STV / Ralph Whitehead Associates, Inc.
900 W Trade Street, Suite 715
Charlotte, NC 28202
NC License No. F-0991

pkelly 4/29/2016 12:32:53 PM I:\PROJ\25325\ustation\struct\Temporary Span\404_060_U3308_SMU_TS09.dgn

DocuSign Envelope ID: 48A27C4D-A37A-43BA-95EE-BF2D2CDF1FAD

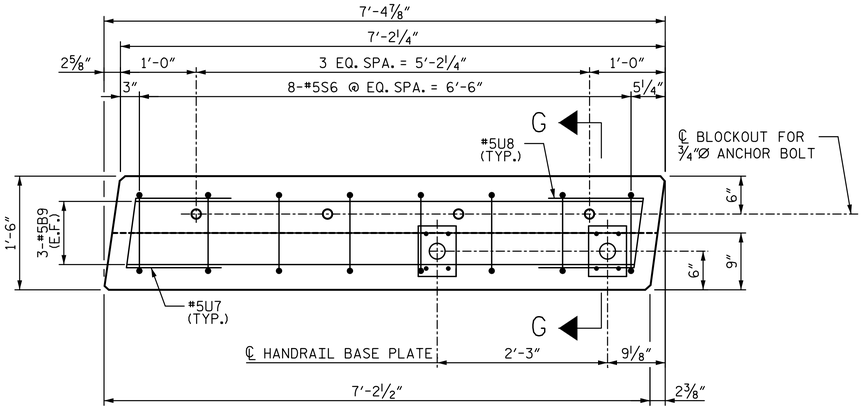

PLAN

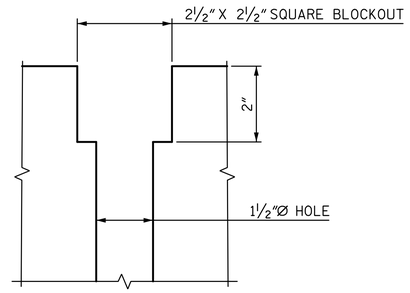

TYPICAL ANCHOR BLOCKOUT DETAIL

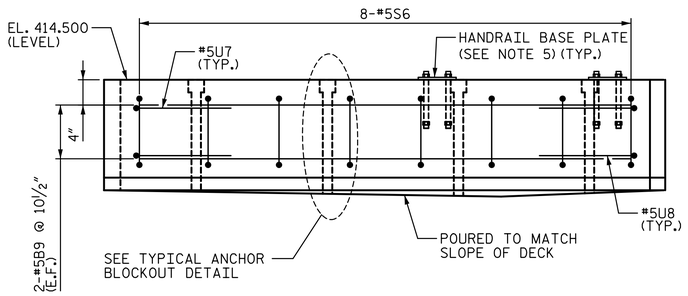

ELEVATION

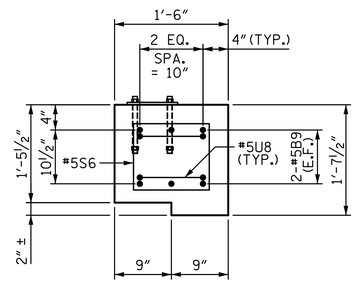

SECTION G-G

CONCRETE BALLAST CURB MK. C6

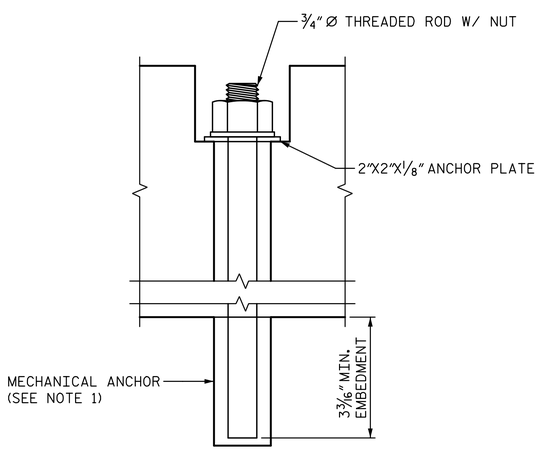

ANCHOR BOLT DETAIL

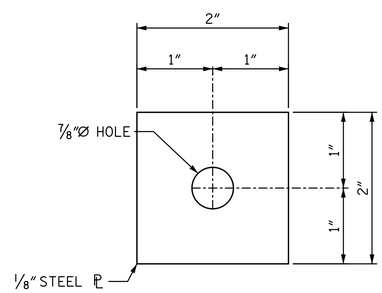

ANCHOR PLATE

NOTES:

1. ALL BLOCKOUT HOLES PASS THROUGH FULL DEPTH OF PEDESTAL OR BALLAST CURB.
2. PREFORMED 1½"Ø HOLES FOR ANCHOR BOLTS SHALL BE FORMED WITH PERMANENT CORRUGATED METAL DUCTS MADE FROM 26 GAUGE STRIP STEEL CONFORMING TO ASTM A 65M, G90 COATING WEIGHT, OR APPROVED EQUAL.
3. SEE SHEET TITLED "TEMPORARY CONCRETE PEDESTAL AND BALLAST RETAINER (4 OF 4) FOR ANCHOR BOLT DETAIL.
4. CONTRACTOR MAY ADJUST REINFORCEMENT SLIGHTLY AS NECESSARY TO AVOID BLOCKOUTS AND HANDRAIL BASE PLATE/ANCHOR BOLTS.
5. ANCHOR RODS FOR BASE PLATE SHALL BE CAST-IN-PLACE WITH THE BALLAST CURB. FOR BASE PLATE AND ANCHOR RODS DETAILS, SEE SHEET TITLED "HANDRAIL DETAILS".
6. FOR HANDRAIL DETAILS, SEE SHEETS TITLED "TEMPORARY CONCRETE PEDESTAL AND BALLAST RETAINER (1 OF 4)" AND "HANDRAIL DETAILS".
7. CHAMFER EDGES ¾" X ¾".
8. 3" COVER U.N.O.
9. FOR MECHANICAL ANCHOR, USE ¾"Ø, RED HEAD MULTI-STEP II DROP-IN ANCHOR, OR APPROVED EQUAL. MECHANICAL ANCHORS SHALL BE INSTALLED PER MANUFACTURER RECOMMENDATIONS.

REINFORCING BAR SCHEDULE

TEMPORARY BALLAST RETAINER

MARK	NO.	SIZE	TYPE	LENGTH (ft. in.)	WEIGHT (lb.)
A1	2	6	STR.	1'-4"	4
A2	2	6	STR.	1'-5"	4
A3	2	6	STR.	1'-7"	5
A4	2	6	STR.	1'-9"	5
A5	2	6	STR.	1'-11"	6
A6	2	6	STR.	2'-0"	6
A7	2	6	STR.	2'-2"	7
A8	2	6	STR.	2'-3"	7
A9	2	6	STR.	2'-6"	7
A10	2	6	STR.	2'-7"	8
A11	2	6	STR.	2'-9"	8
B1	4	6	STR.	11'-8"	71
B2	2	6	STR.	5'-11"	18
B3	2	6	STR.	11'-6"	35
B4	8	5	STR.	5'-7"	47
B5	2	6	5	9'-11"	30
B6	2	6	5	8'-9"	26
B7	2	6	5	8'-10"	27
B8	2	6	5	7'-8"	23
B9	6	5	STR.	6'-8"	42
S1	7	5	4	5'-6"	40
S2	8	5	4	4'-9"	40
S3	3	5	4	3'-9"	12
S4	3	5	4	4'-6"	14
S5	7	5	4	5'-6"	40
S6	8	5	4	4'-10"	40
U1	2	5	1	3'-2"	7
U2	2	5	2	4'-11"	10
U3	3	5	3	3'-4"	10
U4	3	5	3	3'-4"	10
U5	2	5	3	3'-4"	7
U6	2	5	3	3'-4"	7
U7	2	5	3	3'-4"	7
U8	2	5	3	3'-4"	7

BILL OF MATERIAL

COMPONENT MK.	CIP CONCRETE	REINFORCING STEEL
	(C.Y.)	(LBS.)
C1	0.9	104
C2	0.9	104
C3	0.7	107
C4	0.8	115
C5	0.8	111
C6	0.7	96
TOTAL	4.8	637

BAR TYPES

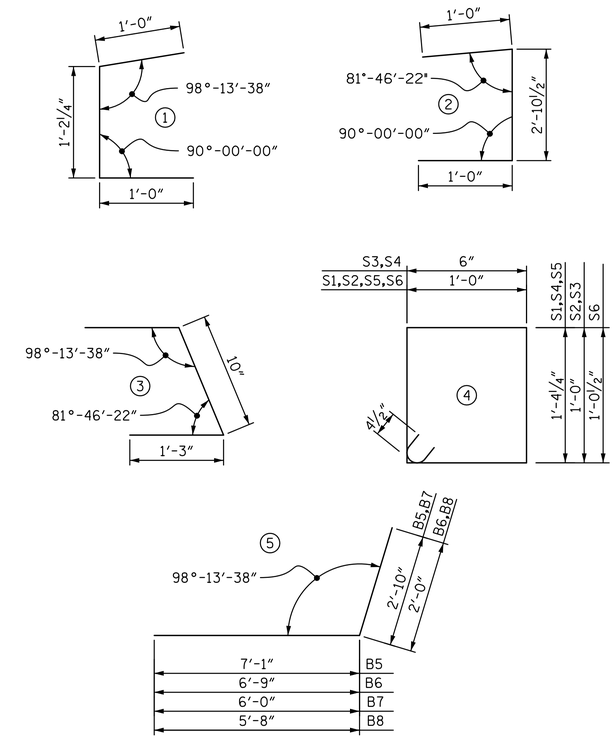

ALL BAR DIMENSIONS ARE OUT TO OUT.

TOTAL QUANTITIES

ITEMS	UNIT	QUANTITY
CIP CONCRETE (5,000 PSI)	C.Y.	4.8
REINFORCING STEEL (60,000 PSI)	LBS.	637
⅛" STEEL PLATE	EA.	29
¾"Ø THREADED ROD AND MECHANICAL ANCHOR ASSEMBLY	EA.	29
HANDRAIL	LIN. FT.	8.3
HANDRAIL BASE PLATE ASSEMBLY	EA.	8
½" ELASTOMERIC PAD	SQ. FT.	60.8

PROJECT NO. U-3308
DURHAM COUNTY
STATION: 24+55.20 -LALT-
13+22.18 -CSXN-
SHEET 10 OF 16

STATE OF NORTH CAROLINA
DEPARTMENT OF TRANSPORTATION
RALEIGH

TEMPORARY CONCRETE PEDESTAL AND BALLAST RETAINER (4 OF 4)

NORTH CAROLINA PROFESSIONAL SEAL 19765 ENGINEER PAUL E. KELLY, JR. 4/29/2016

DOCUMENT NOT CONSIDERED FINAL UNLESS ALL SIGNATURES COMPLETED

STV / Ralph Whitehead Associates, Inc.
900 W Trade Street, Suite 715
Charlotte, NC 28202
NC License No. F-0991

REVISIONS							
NO.	BY:	DATE:	NO.	BY:	DATE:	SHEET NO.	S4-62
1			3			TOTAL SHEETS	68
2			4				

DRAWN BY : MTC DATE : 06-14
CHECKED BY : DJM DATE : 06-14

pkelly 4/29/2016 12:32:56 PM I:\PROJ\25325\ustation\struct\Temporary Span\404_06LU3308_SMU_TS10.dgn

DocuSign Envelope ID: 48A27C4D-A37A-43BA-95EE-BF2D2CDF1FAD

TEMPORARY SPAN STRUCTURAL STEEL NOTES

FOR ADDITIONAL NOTES, SEE SHEET TITLED "TEMPORARY SPAN GENERAL NOTES"

STRUCTURAL STEEL: ALL STRUCTURAL STEEL SHAPES, PLATES AND BARS SHALL BE ASTM A709, GRADE 50 OR 50W, UNLESS NOTED OTHERWISE. FRACTURE CRITICAL MEMBERS SHALL BE ASTM A709, GRADE 50F2 OR 50WF2 (SUPPLEMENTAL REQUIREMENT S84 AND S29 SHALL APPLY). NON-FRACTURE CRITICAL MEMBERS SHALL BE ASTM A709, GRADE 50T2 OR 50WT2 (SUPPLEMENTAL REQUIREMENTS S83 SHALL APPLY). ALL STRUCTURAL STEEL SHALL BE IN ACCORDANCE WITH THE PROJECT SPECIFICATIONS AND THE FOLLOWING REQUIREMENTS:

1. THE MATERIAL SUPPLIED SHALL BE OTHER THAN RIMMED OR CAPPED STEEL.
2. THE MATERIAL SUPPLIED SHALL BE SILICONE KILLED, FINE GRAIN PRACTICE.
3. CERTAIN ELEMENTS OF THE STRUCTURE ARE NOTED AS "FRACTURE CRITICAL MEMBERS" (FCM) AND SHALL MEET THE REQUIREMENTS FOR "FRACTURE CONTROL PLAN FOR FRACTURE CRITICAL MEMBERS" (AREMA CHAPTER 15, SECTION 1.14.) THE IMPACT REQUIREMENTS FOR FRACTURE CRITICAL MEMBERS SHALL BE AS REQUIRED FOR ZONE 2 SERVICE TEMPERATURE. TEST RESULTS SHALL BE FURNISHED TO THE ENGINEER OR AUTHORIZED REPRESENTATIVE.
4. ALL NON-FRACTURE CRITICAL MEMBERS OF THE STRUCTURE SHALL CONFORM TO THE SUPPLEMENTAL REQUIREMENTS FOR NON-FRACTURE CRITICAL IMPACT TEST NOTED IN AREMA CHAPTER 15, SECTION 1.2.1, TABLE 15-1-2 FOR ZONE 2 SERVICE TEMPERATURE. TEST RESULTS SHALL BE FURNISHED TO ENGINEER OR AUTHORIZED REPRESENTATIVE.

ALL STEEL MATERIAL SHALL BE STRAIGHT AND FREE FROM SHARP KINKS AND BENDS. ANY STEEL MATERIAL EXHIBITING SUCH DEFICIENCIES SHALL BE CAUSE FOR THE REJECTION OF THE MATERIAL. STRAIGHTENING OF THE MATERIAL SHALL NOT BE ACCEPTABLE.

MATERIAL AND WORKMANSHIP: EXCEPT AS MAY OTHERWISE BE SPECIFIED ON THE PROJECT PLANS OR SPECIFICATIONS, ALL MATERIAL AND WORKMANSHIP SHALL BE IN ACCORDANCE WITH THE CURRENT EDITION OF AMERICAN RAILWAY ENGINEERING AND MAINTENANCE-OF-WAY ASSOCIATION (AREMA) MANUAL FOR RAILWAY ENGINEERING. PROJECT SHALL ALSO ADHERE TO STATE OF NORTH CAROLINA DEPARTMENT OF TRANSPORTATION (NCDOT) STRUCTURE DESIGN UNIT DESIGN MANUAL, 2007 REVISION. IN THE EVENT OF CONFLICTS THE MORE STRINGENT SHALL APPLY.

SPECIFICATIONS: AMERICAN RAILWAY ENGINEERING AND MAINTENANCE-OF-WAY ASSOCIATION (AREMA) MANUAL FOR RAILWAY ENGINEERING, 2014 EDITION, NORFOLK SOUTHERN UNDERPASS GRADE SEPARATION DESIGN CRITERIA, STATE OF NORTH CAROLINA DEPARTMENT OF TRANSPORTATION STRUCTURE DESIGN UNIT DESIGN MANUAL, STATE OF NORTH CAROLINA DEPARTMENT OF TRANSPORTATION STANDARD SPECIFICATIONS FOR ROADS AND STRUCTURES.

ALL W-SHAPE BEAMS SHALL BE FABRICATED WITH THE NATURAL CAMBER OF THE BEAM "UP".

ALL DIMENSIONS SHOWN ARE HORIZONTAL OR VERTICAL UNLESS OTHERWISE NOTED.

MILL TEST REPORTS: NORFOLK SOUTHERN RAILWAY COMPANY SHALL BE FURNISHED COPIES OF MILL TEST REPORTS FOR ALL MATERIALS EXCEPT MISCELLANEOUS PLATES AND SHAPES. REPORTS SHALL INDICATE COMPLIANCE WITH ALL SPECIFIED REQUIREMENTS.

INSPECTION: SHOP INSPECTION BY NORFOLK SOUTHERN RAILWAY COMPANY OR ITS AUTHORIZED AGENT, SEE SPECIAL PROVISIONS FOR ADDITIONAL WELDING INSPECTION OF FLANGE PLATE TO WEB PLATES WELDS.

SHOP AND FIELD PAINT: ALL NEW STRUCTURAL STEEL MEMBERS, EXCEPT FAYING SURFACES, SHALL BE PAINTED IN ACCORDANCE WITH THE CURRENT NORFOLK SOUTHERN CORPORATION SPECIFICATIONS. THE SYSTEM TO BE USED SHALL BE AN INORGANIC ZINC-ACRYLIC SYSTEM. TOP COAT SHALL BE APPLIED IN THE FIELD.

SHOP DRAWINGS: SHOP DRAWINGS SHALL BE APPROVED BY THE CHIEF ENGINEER BRIDGES & STRUCTURES, NORFOLK SOUTHERN CORPORATION, ATLANTA, GEORGIA. MATERIAL SHALL NOT BE FABRICATED UNTIL DRAWINGS HAVE BEEN APPROVED. COPIES OF APPROVED SHOP DRAWINGS ARE TO BE FURNISHED TO NCDOT. SHOP DRAWINGS SHALL BE LABELED "NORFOLK SOUTHERN M.P. H-56.10".

HOLES: OPEN HOLES AS NOTED.

ANCHOR BOLTS SHALL BE GROUTED IN FORMED HOLES AFTER GIRDERS ARE ERECTED.

BEARING PADS SHALL BE USED WHENEVER STEEL MASONRY PLATE, OR OTHER STEEL BEARING PLATE, BEARS ON CONCRETE. PADS SHALL BE PREFORMED FABRIC BEARING PADS, 1/2" THICK. PREFORMED BEARING PADS SHALL BE SHOCK PAD STYLE 15175, AS MANUFACTURED BY THE ALERT MANUFACTURING AND SUPPLY COMPANY, CHICAGO, IL; OR FABREEKA PADS, AS MANUFACTURED BY THE FABREEKA PRODUCTS COMPANY, BOSTON, MA; OR SORBTEX PADS, AS MANUFACTURED BY VOSS ENGINEERING, INC., CHICAGO, IL; OR AN APPROVED EQUAL.

FOR PROTECTION OF PAINTED STEEL, SEE STANDARD SPECIFICATIONS FOR PAINTING STEEL STRUCTURES.

FOR STRUCTURAL STEEL, SEE SPECIAL PROVISION "NORFOLK SOUTHERN SPECIFICATIONS FOR STRUCTURAL STEEL".

WELDING: WELDING SHALL BE IN ACCORDANCE WITH AASHTO/ AWS-D1.5M:2012 AND AMERICAN NATIONAL STANDARD, INCLUDING INTERIMS, AS MODIFIED OR SUPPLEMENTED BY THE AREMA MANUAL FOR RAILWAY ENGINEERING.

ALL WELDS SHALL BE MADE WITH E7018 ELECTRODES. WELDING SHALL BE PERFORMED WITH THE SUBMERGED ARC WELDING (SAW) OR SHIELDED METAL ARC WELDING (SMAW) PROCESS. FRACTURE-CRITICAL MEMBER FLANGE TO WEB WELDS SHALL BE MADE BY THE SUBMERGED ARC WELDING (SAW) PROCESS.

ALL WELDS ARE TO BE SHOP WELDS, UNLESS NOTED OTHERWISE. WELDING PROCEDURE AND SIZES SHALL BE AS SHOWN IN THE PROJECT PLANS.

THERE SHALL BE THOROUGH FUSION BETWEEN WELD METAL AND BASE METAL AND BETWEEN SUCCESSIVE PASSES OF THE WELD. ALL CRATERS SHALL BE FILLED TO THE FULL CROSS SECTION OF THE WELD.

PRIOR TO WELDING, EACH WELDER SHALL HAVE BEEN CERTIFIED IN ACCORDANCE WITH AWS REQUIREMENTS DURING A PERIOD OF ONE (1) YEAR PRIOR TO WORK ON THE BRIDGE. THE FABRICATOR SHALL FURNISH THE ENGINEER OR AUTHORIZED REPRESENTATIVE WITH AN AWS CERTIFICATE FOR EACH WELDER, COVERING THEIR ABILITY TO MAKE A COMPLETE AND SATISFACTORY WELD OF EACH KIND TO BE USED ON THE PROJECT.

SURFACES AND EDGES TO BE WELDED SHALL BE SMOOTH, UNIFORM AND FREE FROM FINS, TEARS CRACKS, OR OTHER DEFICIENCIES WHICH WOULD ADVERSELY AFFECT THE QUALITY OR STRENGTH OF THE WELD. SURFACES TO BE WELDED AND SURFACES ADJACENT TO A WELD SHALL ALSO BE FREE OF ANY SCALE, SLAG, RUST, MOISTURE, GREASE OR OTHER FOREIGN MATERIAL THAT WILL INHIBIT PROPER WELDING.

NON-DESTRUCTIVE TESTING OF THE FRACTURE CRITICAL MEMBERS IS TO BE PERFORMED BY AN INDEPENDENT TESTING COMPANY APPROVED BY THE ENGINEER AND CONTRACTED BY THE FABRICATOR. PERSONAL QUALIFICATIONS AND CERTIFICATION ARE TO BE IN ACCORDANCE WITH THE CURRENT AREMA MANUAL CHAPTER 15 FOR FRACTURE CRITICAL MEMBERS. COPIES OF THE TEST ARE TO BE FURNISHED TO THE ENGINEER OR AUTHORIZED REPRESENTATIVE FOR INCLUSION IN THEIR PROJECT FILE.

THERE SHALL BE NO FIELD WELDING ON THIS PROJECT OTHER THAN AS DIRECTLY DETAILED IN THESE PLANS, UNLESS APPROVED BY THE ENGINEER OR AUTHORIZED REPRESENTATIVE IN WRITING.

BOLTS: ALL BOLTED CONNECTIONS SHALL BE MADE WITH 7/8" DIA. ASTM A325, TYPE 3 BOLTS UNLESS NOTED OTHERWISE. NUTS AND WASHER SHALL BE A563, GRADE C3, AND F436, TYPE 3 RESPECTIVELY. ALL BOLTS, NUTS, AND WASHERS SHALL BE MECHANICALLY GALVANIZED UNLESS NOTED OTHERWISE. OPEN HOLES SHALL BE 15/16" DIA. UNLESS NOTED OTHERWISE. ALL BOLTS, NUTS, AND WASHERS WILL BE SUPPLIED FROM A SINGLE SOURCE WITH DOCUMENTATION OF THEIR SOURCE AND QUALITY CERTIFICATION. ALL HIGH STRENGTH BOLTS SHALL BE TIGHTENED BY THE "TURN-OF-NUT METHOD" IN ACCORDANCE WITH AREMA MANUAL CHAPTER 15, SECTION 3.2.3 - INSTALLATION OF HIGH STRENGTH BOLTS. ANY BOLTS THAT REQUIRE REMOVAL AFTER BEING TIGHTENED SHALL BE DISCARDED AND A NEW BOLT INSTALLED, UNLESS OTHERWISE NOTED.

ALL BOLT HOLES SHALL BE SUB-DRILLED AND REAMED OR DRILLED FROM THE SOLID. AT NO TIME ARE HOLES TO BE SUB-PUNCHED AND REAMED OR PUNCHED FULL SIZE.

ALL HOLES SHALL BE 1/16" LARGER THAN THE SPECIFIED BOLT SIZE UNLESS OTHERWISE NOTED IN THE PROJECT PLANS.

BOLTS SHALL BE INSTALLED WITH THE BOLT HEADS EXPOSED TO THE WEATHER. THE SPECIFIED WASHERS SHALL BE INSTALLED BENEATH THE TURNING ELEMENT. VERTICALLY POSITIONED BOLTS WHICH HAVE BOTH THE HEAD AND NUT EXPOSED TO WEATHER SHALL HAVE THE HEAD PLACED ABOVE THE NUT. HORIZONTAL POSITIONED NUTS SHALL HAVE THE HEADS ON THE VISIBLE SIDE OF THE CONNECTION.

SWEDGED ANCHOR BOLTS SHALL CONFORM TO ASTM F1554, GRADE 55, AS DESIGNATED IN THE PROJECT PLANS. SWEDGED ANCHOR BOLTS SHALL NOT BE PAINTED. ANCHOR BOLT NUTS AND WASHER SHALL CONFORM TO ASTM A563, GRADE C3 HEAVY HEX WITH NYLON INSERT AND ASTM F436, TYPE 3 CIRCULAR WASHERS, RESPECTIVELY. ANCHOR BOLTS AND ALL ASSOCIATED HARDWARE SHALL BE HOT DIPPED GALVANIZED IN ACCORDANCE WITH ASTM A153, CLASS C.

NO SALVAGED MATERIALS WILL BE ALLOWED FOR THE CONSTRUCTION OF THE TEMPORARY SPAN.

APPROX. STRUCTURAL STEEL QUANTITIES

ITEMS	UNIT	QUANTITY
TEMPORARY SPAN APPROX. STRUCTURAL STEEL	LBS.	90,200
TEMPORARY SPAN APPROX. STRUCTURAL STEEL - ALTERNATE	LBS.	77,000

PROJECT NO. U-3308
DURHAM COUNTY
STATION: 24+55.20 -LALT-
13+22.18 -CSXN-
SHEET 11 OF 16

STATE OF NORTH CAROLINA
DEPARTMENT OF TRANSPORTATION
RALEIGH

TEMPORARY SPAN STRUCTURAL STEEL NOTES

DocuSigned by: Paul E. Kelly Jr. 26AD1BDDE0E2488... NORTH CAROLINA PROFESSIONAL SEAL 19765 ENGINEER PAUL E. KELLY JR. 4/29/2016

DOCUMENT NOT CONSIDERED FINAL UNLESS ALL SIGNATURES COMPLETED

STV / Ralph Whitehead Associates, Inc.
900 W Trade Street, Suite 715
Charlotte, NC 28202
NC License No. F-0991

REVISIONS

NO.	BY:	DATE:	NO.	BY:	DATE:
1			3		
2			4		

SHEET NO. S4-63
TOTAL SHEETS 68

DRAWN BY : NMC DATE : 06-14
CHECKED BY : DJM DATE : 06-14

pkelly 4/29/2016 12:32:59 PM I:\PROJ\25\325\ustation\struct\Temporary Span\404_062_U3308_SMU_TSII.dgn

DocuSign Envelope ID: 350CC784-7D57-4913-AD79-B3ECFB8C8DB5

TEMPORARY SPAN STRUCTURAL STEEL NOTES

FOR ADDITIONAL NOTES, SEE SHEET TITLED "TEMPORARY SPAN GENERAL NOTES"

STRUCTURAL STEEL: ALL STRUCTURAL STEEL SHAPES, PLATES AND BARS SHALL BE ASTM A709, GRADE 50 OR 50W, UNLESS NOTED OTHERWISE. FRACTURE CRITICAL MEMBERS SHALL BE ASTM A709, GRADE 50F2 OR 50WF2 (SUPPLEMENTAL REQUIREMENT S84 AND S29 SHALL APPLY). NON-FRACTURE CRITICAL MEMBERS SHALL BE ASTM A709, GRADE 50T2 OR 50WT2 (SUPPLEMENTAL REQUIREMENTS S83 SHALL APPLY). ALL STRUCTURAL STEEL SHALL BE IN ACCORDANCE WITH THE PROJECT SPECIFICATIONS AND THE FOLLOWING REQUIREMENTS:

1. THE MATERIAL SUPPLIED SHALL BE OTHER THAN RIMMED OR CAPPED STEEL.
2. THE MATERIAL SUPPLIED SHALL BE SILICONE KILLED, FINE GRAIN PRACTICE.
3. CERTAIN ELEMENTS OF THE STRUCTURE ARE NOTED AS "FRACTURE CRITICAL MEMBERS" (FCM) AND SHALL MEET THE REQUIREMENTS FOR "FRACTURE CONTROL PLAN FOR FRACTURE CRITICAL MEMBERS" (AREMA CHAPTER 15, SECTION 1.14.) THE IMPACT REQUIREMENTS FOR FRACTURE CRITICAL MEMBERS SHALL BE AS REQUIRED FOR ZONE 2 SERVICE TEMPERATURE. TEST RESULTS SHALL BE FURNISHED TO THE ENGINEER OR AUTHORIZED REPRESENTATIVE.
4. ALL NON-FRACTURE CRITICAL MEMBERS OF THE STRUCTURE SHALL CONFORM TO THE SUPPLEMENTAL REQUIREMENTS FOR NON-FRACTURE CRITICAL IMPACT TEST NOTED IN AREMA CHAPTER 15, SECTION 1.2.1, TABLE 15-1-2 FOR ZONE 2 SERVICE TEMPERATURE. TEST RESULTS SHALL BE FURNISHED TO ENGINEER OR AUTHORIZED REPRESENTATIVE.

ALL STEEL MATERIAL SHALL BE STRAIGHT AND FREE FROM SHARP KINKS AND BENDS. ANY STEEL MATERIAL EXHIBITING SUCH DEFICIENCIES SHALL BE CAUSE FOR THE REJECTION OF THE MATERIAL. STRAIGHTENING OF THE MATERIAL SHALL NOT BE ACCEPTABLE.

MATERIAL AND WORKMANSHIP: EXCEPT AS MAY OTHERWISE BE SPECIFIED ON THE PROJECT PLANS OR SPECIFICATIONS, ALL MATERIAL AND WORKMANSHIP SHALL BE IN ACCORDANCE WITH THE CURRENT EDITION OF AMERICAN RAILWAY ENGINEERING AND MAINTENANCE-OF-WAY ASSOCIATION (AREMA) MANUAL FOR RAILWAY ENGINEERING. PROJECT SHALL ALSO ADHERE TO STATE OF NORTH CAROLINA DEPARTMENT OF TRANSPORTATION (NCDOT) STRUCTURE DESIGN UNIT DESIGN MANUAL, 2007 REVISION. IN THE EVENT OF CONFLICTS THE MORE STRINGENT SHALL APPLY.

SPECIFICATIONS: AMERICAN RAILWAY ENGINEERING AND MAINTENANCE-OF-WAY ASSOCIATION (AREMA) MANUAL FOR RAILWAY ENGINEERING, 2014 EDITION, NORFOLK SOUTHERN UNDERPASS GRADE SEPARATION DESIGN CRITERIA, STATE OF NORTH CAROLINA DEPARTMENT OF TRANSPORTATION STRUCTURE DESIGN UNIT DESIGN MANUAL, STATE OF NORTH CAROLINA DEPARTMENT OF TRANSPORTATION STANDARD SPECIFICATIONS FOR ROADS AND STRUCTURES.

ALL W-SHAPE BEAMS SHALL BE FABRICATED WITH THE NATURAL CAMBER OF THE BEAM "UP".

ALL DIMENSIONS SHOWN ARE HORIZONTAL OR VERTICAL UNLESS OTHERWISE NOTED.

MILL TEST REPORTS: NORFOLK SOUTHERN RAILWAY COMPANY SHALL BE FURNISHED COPIES OF MILL TEST REPORTS FOR ALL MATERIALS EXCEPT MISCELLANEOUS PLATES AND SHAPES. REPORTS SHALL INDICATE COMPLIANCE WITH ALL SPECIFIED REQUIREMENTS.

INSPECTION: SHOP INSPECTION BY NORFOLK SOUTHERN RAILWAY COMPANY OR ITS AUTHORIZED AGENT, SEE SPECIAL PROVISIONS FOR ADDITIONAL WELDING INSPECTION OF FLANGE PLATE TO WEB PLATES WELDS.

SHOP DRAWINGS: SHOP DRAWINGS SHALL BE APPROVED BY THE CHIEF ENGINEER BRIDGES & STRUCTURES, NORFOLK SOUTHERN CORPORATION, ATLANTA, GEORGIA. MATERIAL SHALL NOT BE FABRICATED UNTIL DRAWINGS HAVE BEEN APPROVED. COPIES OF APPROVED SHOP DRAWINGS ARE TO BE FURNISHED TO NCDOT. SHOP DRAWINGS SHALL BE LABELED "NORFOLK SOUTHERN M.P. H-56.10".

HOLES: OPEN HOLES AS NOTED.

ANCHOR BOLTS SHALL BE GROUTED IN FORMED HOLES AFTER GIRDERS ARE ERECTED.

BEARING PADS SHALL BE USED WHENEVER STEEL MASONRY PLATE, OR OTHER STEEL BEARING PLATE, BEARS ON CONCRETE. PADS SHALL BE PREFORMED FABRIC BEARING PADS, 1/2" THICK. PREFORMED BEARING PADS SHALL BE SHOCK PAD STYLE 15175, AS MANUFACTURED BY THE ALERT MANUFACTURING AND SUPPLY COMPANY, CHICAGO, IL; OR FABREEKA PADS, AS MANUFACTURED BY THE FABREEKA PRODUCTS COMPANY, BOSTON, MA; OR SORBTEX PADS, AS MANUFACTURED BY VOSS ENGINEERING, INC., CHICAGO, IL; OR AN APPROVED EQUAL.

FOR STRUCTURAL STEEL, SEE SPECIAL PROVISION "NORFOLK SOUTHERN SPECIFICATIONS FOR STRUCTURAL STEEL".

WELDING: WELDING SHALL BE IN ACCORDANCE WITH AASHTO/ AWS-D1.5M:2012 AND AMERICAN NATIONAL STANDARD, INCLUDING INTERIMS, AS MODIFIED OR SUPPLEMENTED BY THE AREMA MANUAL FOR RAILWAY ENGINEERING.

ALL WELDS SHALL BE MADE WITH E7018 ELECTRODES. WELDING SHALL BE PERFORMED WITH THE SUBMERGED ARC WELDING (SAW) OR SHIELDED METAL ARC WELDING (SMAW) PROCESS. FRACTURE-CRITICAL MEMBER FLANGE TO WEB WELDS SHALL BE MADE BY THE SUBMERGED ARC WELDING (SAW) PROCESS.

ALL WELDS ARE TO BE SHOP WELDS, UNLESS NOTED OTHERWISE. WELDING PROCEDURE AND SIZES SHALL BE AS SHOWN IN THE PROJECT PLANS.

THERE SHALL BE THOROUGH FUSION BETWEEN WELD METAL AND BASE METAL AND BETWEEN SUCCESSIVE PASSES OF THE WELD. ALL CRATERS SHALL BE FILLED TO THE FULL CROSS SECTION OF THE WELD.

PRIOR TO WELDING, EACH WELDER SHALL HAVE BEEN CERTIFIED IN ACCORDANCE WITH AWS REQUIREMENTS DURING A PERIOD OF ONE (1) YEAR PRIOR TO WORK ON THE BRIDGE. THE FABRICATOR SHALL FURNISH THE ENGINEER OR AUTHORIZED REPRESENTATIVE WITH AN AWS CERTIFICATE FOR EACH WELDER, COVERING THEIR ABILITY TO MAKE A COMPLETE AND SATISFACTORY WELD OF EACH KIND TO BE USED ON THE PROJECT.

SURFACES AND EDGES TO BE WELDED SHALL BE SMOOTH, UNIFORM AND FREE FROM FINS, TEARS CRACKS, OR OTHER DEFICIENCIES WHICH WOULD ADVERSELY AFFECT THE QUALITY OR STRENGTH OF THE WELD. SURFACES TO BE WELDED AND SURFACES ADJACENT TO A WELD SHALL ALSO BE FREE OF ANY SCALE, SLAG, RUST, MOISTURE, GREASE OR OTHER FOREIGN MATERIAL THAT WILL INHIBIT PROPER WELDING.

NON-DESTRUCTIVE TESTING OF THE FRACTURE CRITICAL MEMBERS IS TO BE PERFORMED BY AN INDEPENDENT TESTING COMPANY APPROVED BY THE ENGINEER AND CONTRACTED BY THE FABRICATOR. PERSONAL QUALIFICATIONS AND CERTIFICATION ARE TO BE IN ACCORDANCE WITH THE CURRENT AREMA MANUAL CHAPTER 15 FOR FRACTURE CRITICAL MEMBERS. COPIES OF THE TEST ARE TO BE FURNISHED TO THE ENGINEER OR AUTHORIZED REPRESENTATIVE FOR INCLUSION IN THEIR PROJECT FILE.

THERE SHALL BE NO FIELD WELDING ON THIS PROJECT OTHER THAN AS DIRECTLY DETAILED IN THESE PLANS, UNLESS APPROVED BY THE ENGINEER OR AUTHORIZED REPRESENTATIVE IN WRITING.

BOLTS: ALL BOLTED CONNECTIONS SHALL BE MADE WITH 7/8" DIA. ASTM A325, TYPE 3 BOLTS UNLESS NOTED OTHERWISE. NUTS AND WASHER SHALL BE A563, GRADE C3, AND F436, TYPE 3 RESPECTIVELY. ALL BOLTS, NUTS, AND WASHERS SHALL BE MECHANICALLY GALVANIZED UNLESS NOTED OTHERWISE. OPEN HOLES SHALL BE 15/16" DIA. UNLESS NOTED OTHERWISE. ALL BOLTS, NUTS, AND WASHERS WILL BE SUPPLIED FROM A SINGLE SOURCE WITH DOCUMENTATION OF THEIR SOURCE AND QUALITY CERTIFICATION. ALL HIGH STRENGTH BOLTS SHALL BE TIGHTENED BY THE "TURN-OF-NUT METHOD" IN ACCORDANCE WITH AREMA MANUAL CHAPTER 15, SECTION 3.2.3 - INSTALLATION OF HIGH STRENGTH BOLTS. ANY BOLTS THAT REQUIRE REMOVAL AFTER BEING TIGHTENED SHALL BE DISCARDED AND A NEW BOLT INSTALLED, UNLESS OTHERWISE NOTED. FOR TURN-OF-NUT TIGHTENING SEE SPECIAL PROVISIONS.

ALL BOLT HOLES SHALL BE SUB-DRILLED AND REAMED OR DRILLED FROM THE SOLID. AT NO TIME ARE HOLES TO BE SUB-PUNCHED AND REAMED OR PUNCHED FULL SIZE.

ALL HOLES SHALL BE 1/16" LARGER THAN THE SPECIFIED BOLT SIZE UNLESS OTHERWISE NOTED IN THE PROJECT PLANS.

BOLTS SHALL BE INSTALLED WITH THE BOLT HEADS EXPOSED TO THE WEATHER. THE SPECIFIED WASHERS SHALL BE INSTALLED BENEATH THE TURNING ELEMENT. VERTICALLY POSITIONED BOLTS WHICH HAVE BOTH THE HEAD AND NUT EXPOSED TO WEATHER SHALL HAVE THE HEAD PLACED ABOVE THE NUT. HORIZONTAL POSITIONED NUTS SHALL HAVE THE HEADS ON THE VISIBLE SIDE OF THE CONNECTION.

SWEDGED ANCHOR BOLTS SHALL CONFORM TO ASTM F1554, GRADE 55, AS DESIGNATED IN THE PROJECT PLANS. SWEDGED ANCHOR BOLTS SHALL NOT BE PAINTED. ANCHOR BOLT NUTS AND WASHER SHALL CONFORM TO ASTM A563, GRADE C3 HEAVY HEX WITH NYLON INSERT AND ASTM F436, TYPE 3 CIRCULAR WASHERS, RESPECTIVELY. ANCHOR BOLTS AND ALL ASSOCIATED HARDWARE SHALL BE HOT DIPPED GALVANIZED IN ACCORDANCE WITH ASTM A153, CLASS C.

NO SALVAGED MATERIALS WILL BE ALLOWED FOR THE CONSTRUCTION OF THE TEMPORARY SPAN.

APPROX. STRUCTURAL STEEL QUANTITIES

ITEMS	UNIT	QUANTITY
TEMPORARY SPAN APPROX. STRUCTURAL STEEL	LBS.	90,200
TEMPORARY SPAN APPROX. STRUCTURAL STEEL - ALTERNATE	LBS.	77,000

PROJECT NO. U-3308
DURHAM COUNTY
STATION: 24+55.20 -LALT-
13+22.18 -CSXN-
SHEET 11 OF 16

STATE OF NORTH CAROLINA
DEPARTMENT OF TRANSPORTATION
RALEIGH

TEMPORARY SPAN STRUCTURAL STEEL NOTES

NORTH CAROLINA PROFESSIONAL SEAL 19765 ENGINEER PAUL E. KELLY, JR.
DocuSigned by: Paul Kelly Jr. 26ADE85E2C06A4B...
7/7/2016

STV / Ralph Whitehead Associates, Inc.
900 W Trade Street, Suite 715
Charlotte, NC 28202
NC License No. F-0991

REVISIONS								SHEET NO.
NO.	BY:	DATE:	NO.	BY:	DATE:			S4-63
1			3					TOTAL SHEETS
2			4					68

DRAWN BY : NMC DATE : 06-14
CHECKED BY : DJM DATE : 06-14

pkelly 7/7/2016 12:07:13 PM I:\PROJ\25\325\ustation\struct\Temporary Span\up_404_062_U3308_SMU_TS11.dgn

DocuSign Envelope ID: 48A27C4D-A37A-43BA-95EE-BF2D2CDF1FAD

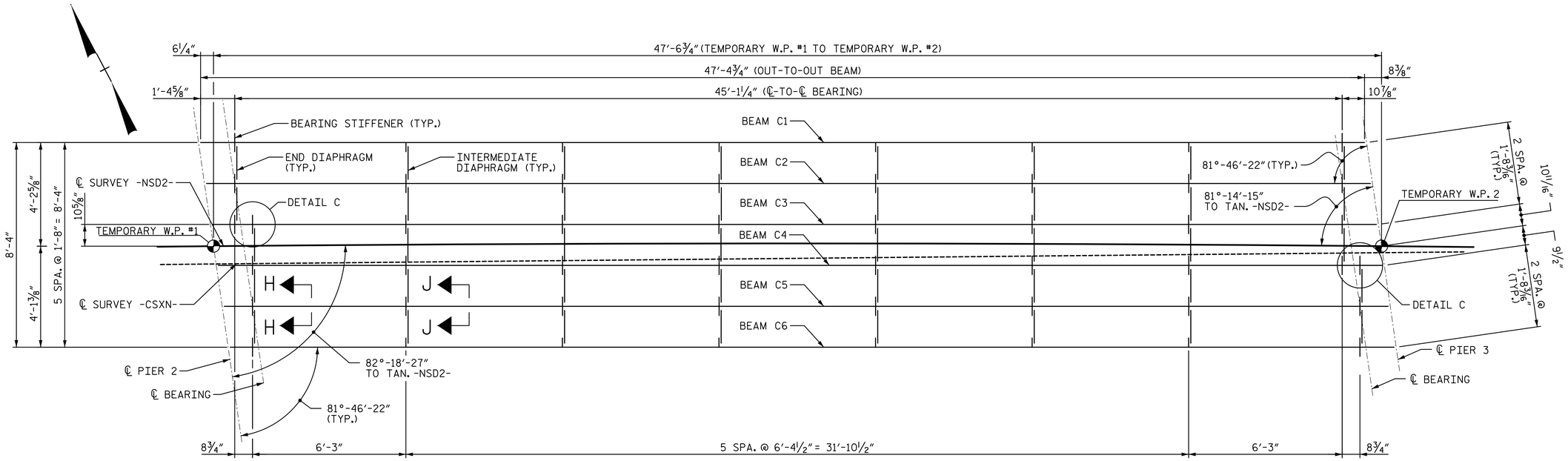

PLAN - TEMPORARY SPAN C

(PIERS ARE PARALLEL)

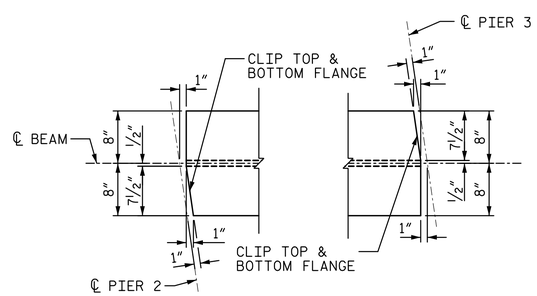

BEAM END CLIP DETAIL

(TOP AND BOTTOM FLANGE)

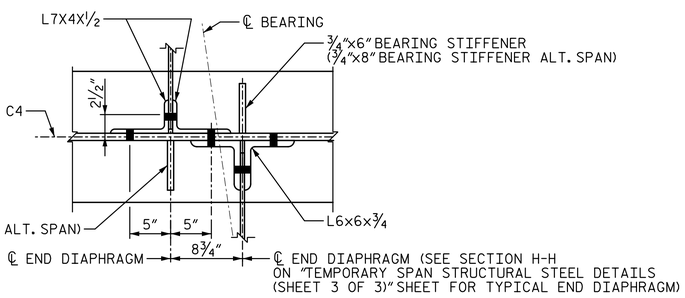

DETAIL C

END DIAPHRAGM AT PIER 3 SHOWN, PIER 2 SIMILAR.

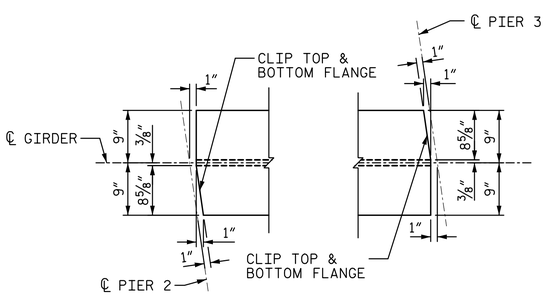

GIRDER END CLIP DETAIL - ALTERNATE

(TOP AND BOTTOM FLANGE)

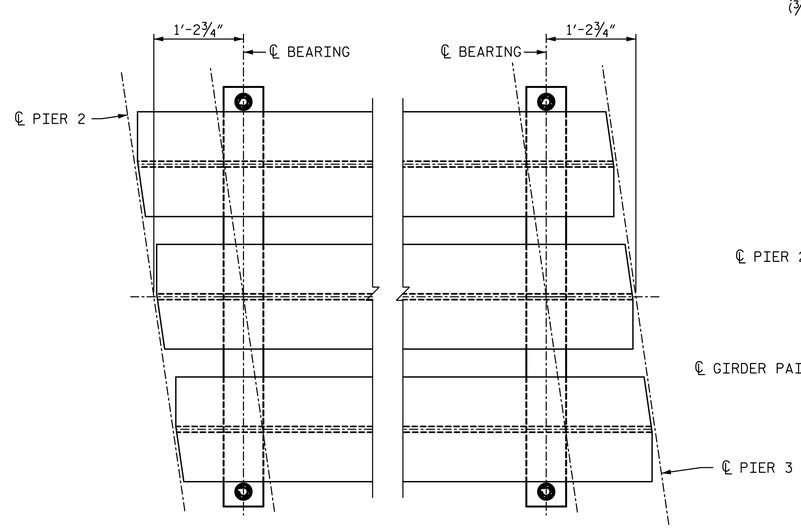

BEARING LOCATION DETAIL

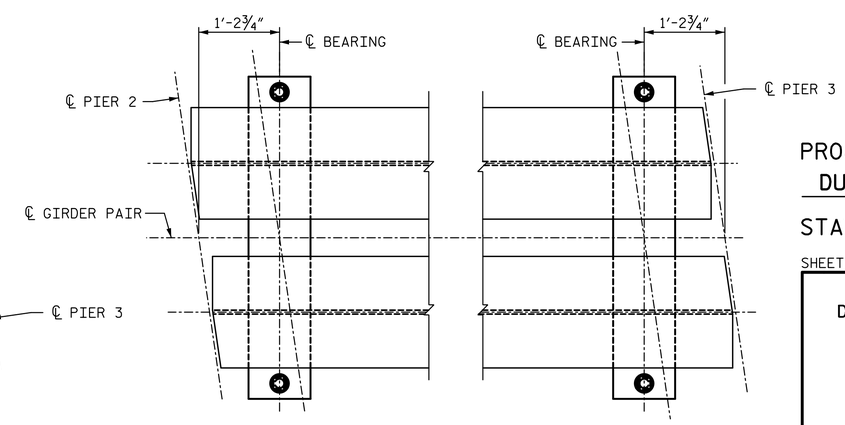

BEARING LOCATION DETAIL - ALTERNATE

NOTES:

1. FOR ALTERNATE 4-GIRDER SPACING SEE SHEET TITLED "TEMPORARY SPAN TYPICAL SECTION".
2. FOR SECTION H-H AND J-J, SEE SHEET TITLED "TEMPORARY SPAN STRUCTURAL STEEL DETAILS (3 OF 3)".

DOCUMENT NOT CONSIDERED FINAL UNLESS ALL SIGNATURES COMPLETED

STV / Ralph Whitehead Associates, Inc.
900 W Trade Street, Suite 715
Charlotte, NC 28202
NC License No. F-0991

NORTH CAROLINA PROFESSIONAL SEAL 19765 ENGINEER PAUL E. KELLY, JR. 4/29/2016

PROJECT NO. U-3308
DURHAM COUNTY
STATION: 24+55.20 -LALT-
13+22.18 -CSXN-
SHEET 12 OF 16

STATE OF NORTH CAROLINA
DEPARTMENT OF TRANSPORTATION
RALEIGH

TEMPORARY SPAN STRUCTURAL STEEL DETAILS (1 OF 3)

REVISIONS								SHEET NO.
NO.	BY:	DATE:	NO.	BY:	DATE:			S4-64
1			3					TOTAL SHEETS
2			4					68

DRAWN BY : NMC DATE : 06-14
CHECKED BY : DJM DATE : 06-14

pkelly 4/29/2016 12:33:03 PM I:\PROJ\25325\ustation\struct\Temporary Span\404_063_U3308_SMU_TS12.dgn

DocuSign Envelope ID: 48A27C4D-A37A-43BA-95EE-BF2D2CDF1FAD

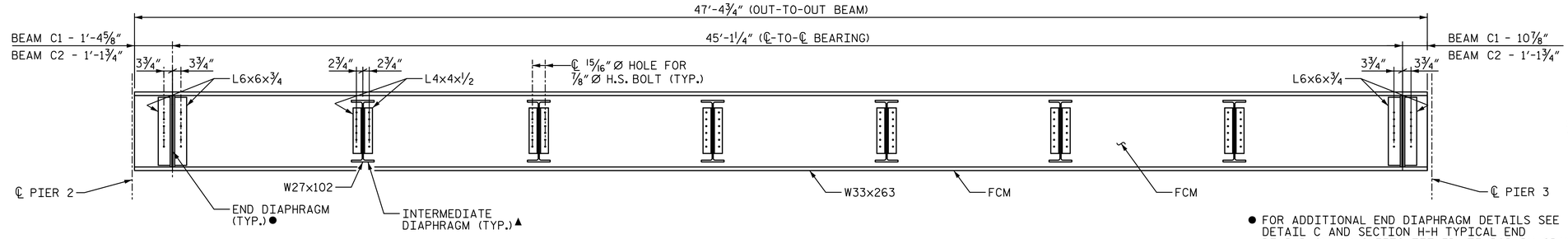

ELEVATION - TEMPORARY SPAN C @ BEAM C1, C2

● FOR ADDITIONAL END DIAPHRAGM DETAILS SEE DETAIL C AND SECTION H-H TYPICAL END DIAPHRAGM ON SHEETS TITLED "TEMPORARY SPAN STRUCTURAL STEEL DETAILS (1 OF 3)" & "TEMPORARY SPAN STRUCTURAL STEEL DETAILS (3 OF 3)" RESPECTIVELY.

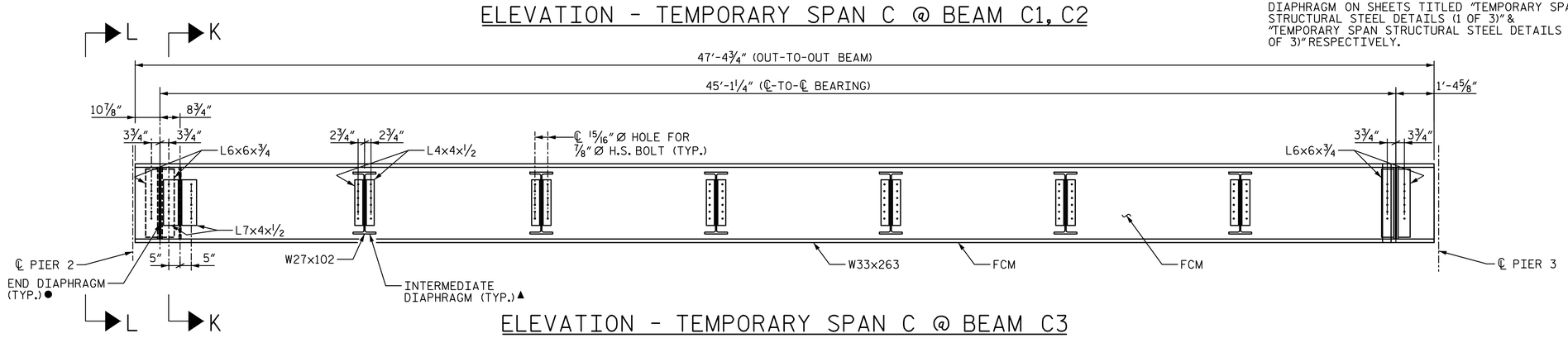

ELEVATION - TEMPORARY SPAN C @ BEAM C3

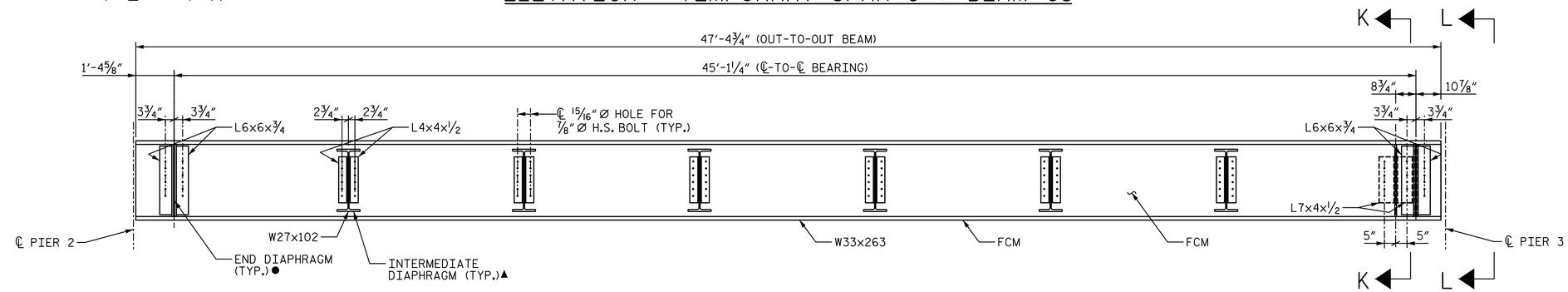

ELEVATION - TEMPORARY SPAN C @ BEAM C4

▲ FOR ADDITIONAL INTERMEDIATE DIAPHRAGM DETAILS, SEE SECTION J-J TYPICAL INTERMEDIATE DIAPHRAGM ON SHEET TITLED "TEMPORARY SPAN STRUCTURAL STEEL DETAILS (3 OF 3)".

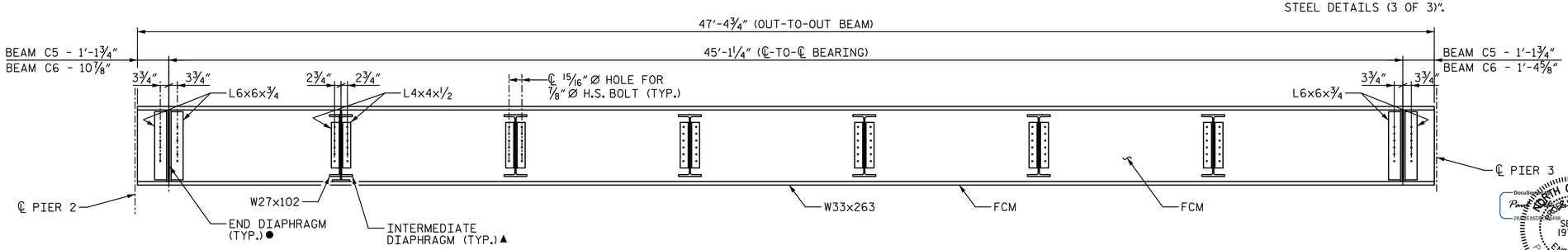

ELEVATION - TEMPORARY SPAN C @ BEAM C5 & C6

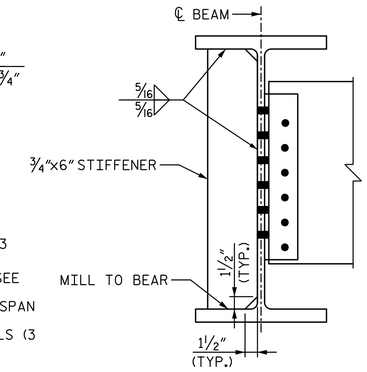

SECTION K-K

FOR ADDITIONAL DIAPHRAGM AND CONNECTION DETAILS, SEE SECTION J-J ON SHEET TITLED "TEMPORARY SPAN STRUCTURAL STEEL DETAILS (3 OF 3)".

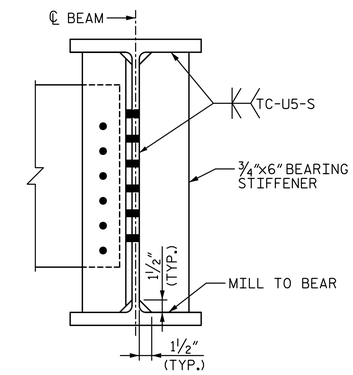

SECTION L-L

FOR ADDITIONAL DIAPHRAGM AND CONNECTION DETAILS, SEE SECTION H-H ON SHEET TITLED "TEMPORARY SPAN STRUCTURAL STEEL DETAILS (3 OF 3)".

NOTES:

1. FOR ALTERNATE 4 GIRDER SPACING SEE TITLED "TEMPORARY SPAN TYPICAL SECTION".
2. FOR END DIAPHRAGM AND INTERMEDIATE DIAPHRAGM DETAILS, SEE SHEET TITLED "TEMPORARY SPAN STRUCTURAL STEEL DETAILS (3 OF 3)".
3. FOR WELD TERMINATION DETAILS, SEE SHEET TITLED "STRUCTURAL STEEL DIAPHRAGM DETAILS".

PROJECT NO. U-3308

DURHAM COUNTY

STATION: 24+55.20 -LALT-
13+22.18 -CSXN-

SHEET 13 OF 16

STATE OF NORTH CAROLINA
DEPARTMENT OF TRANSPORTATION
RALEIGH

TEMPORARY SPAN STRUCTURAL STEEL DETAILS (2 OF 3)

NORTH CAROLINA PROFESSIONAL SEAL 19765 ENGINEER PAUL E. KELLY, JR. 4/29/2016

DocuSign Envelope ID: 48A27C4D-A37A-43BA-95EE-BF2D2CDF1FAD

REVISIONS								SHEET NO.
NO.	BY:	DATE:	NO.	BY:	DATE:			S4-65
1			3					TOTAL SHEETS
2			4					68

DRAWN BY : MTC DATE : 06-14
CHECKED BY : DJM DATE : 06-14

DOCUMENT NOT CONSIDERED FINAL UNLESS ALL SIGNATURES COMPLETED

STV / Ralph Whitehead Associates, Inc.
900 W Trade Street, Suite 715
Charlotte, NC 28202
NC License No. F-0991

pkelly 4/29/2016 12:33:06 PM I:\PROJ\25325\ustation\struct\Temporary Span\404_064_U3308_SMU_TS13.dgn

DocuSign Envelope ID: 48A27C4D-A37A-43BA-95EE-BF2D2CDF1FAD

▲FOR OUTSIDE FACE OF EXTERIOR GIRDER/BEAM PROVIDE 1/2"x8"x1'-10" FILLER PLATE BETWEEN ANGLES.

NOTE: FOR WELD TERMINIATION DETAILS, SEE SHEET TITLED "STRUCTURAL STEEL DIAPHRAGM DETAILS".

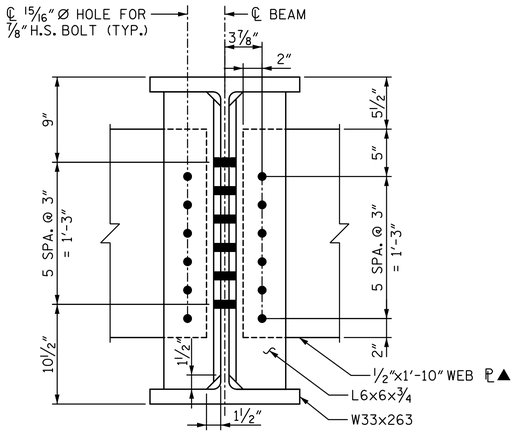

SECTION H-H
TYPICAL END DIAPHRAGM

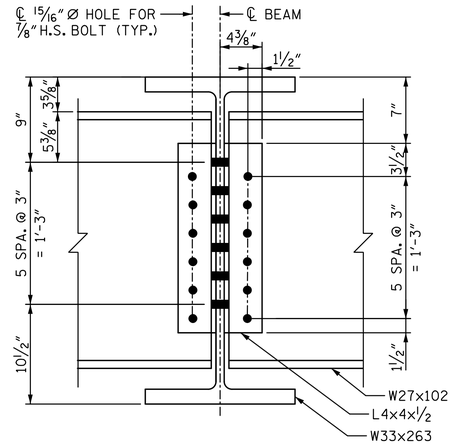

SECTION J-J
TYPICAL INTERMEDIATE DIAPHRAGM

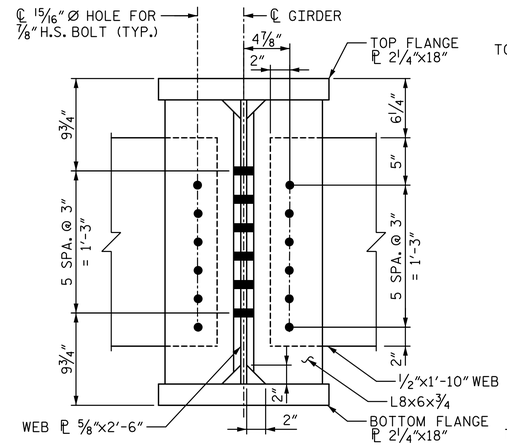

SECTION H-H - ALTERNATE
TYPICAL END DIAPHRAGM

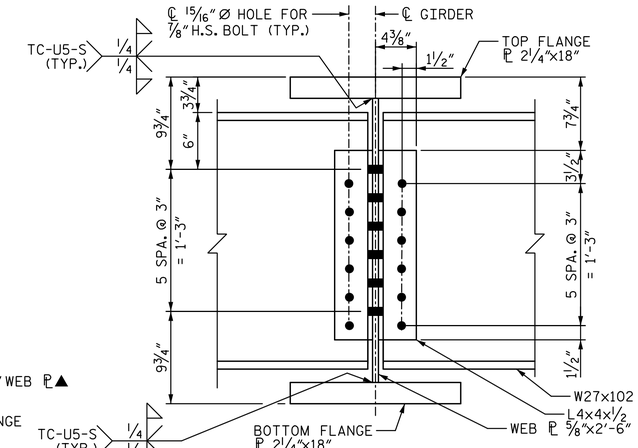

SECTION J-J - ALTERNATE
TYPICAL INTERMEDIATE DIAPHRAGM

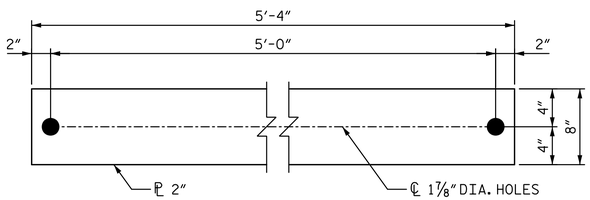

SOLE PLATE

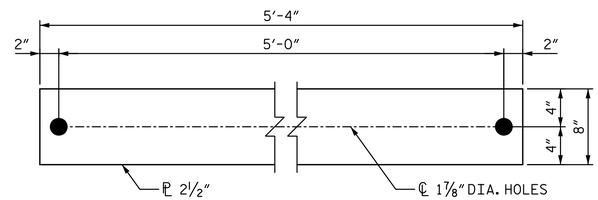

MASONRY PLATE

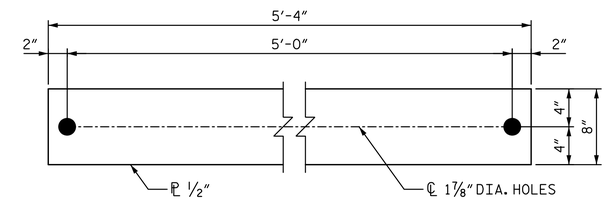

SHOCK PAD

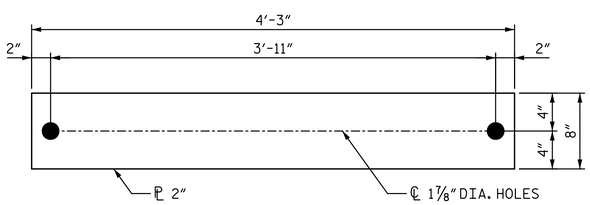

SOLE PLATE (ALTERNATE)

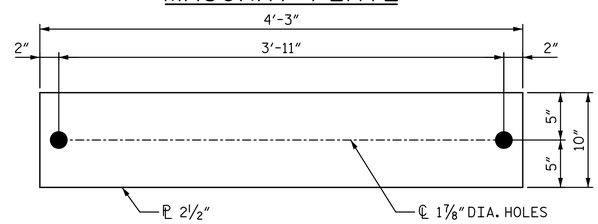

MASONRY PLATE (ALTERNATE)

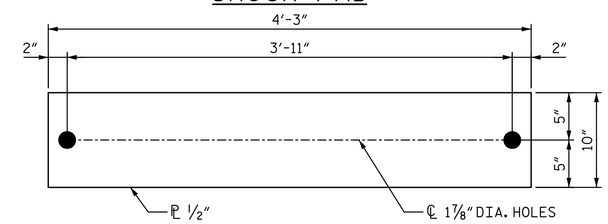

SHOCK PAD (ALTERNATE)

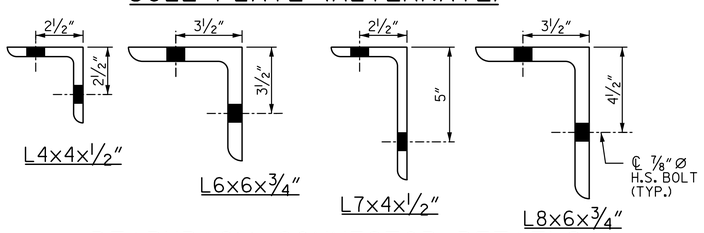

DIAPHRAGM CONNECTOR DETAILS

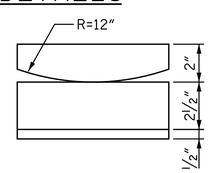

SECTION THROUGH BEARING

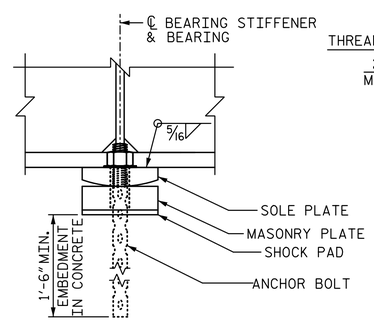

BEARING ASSEMBLY

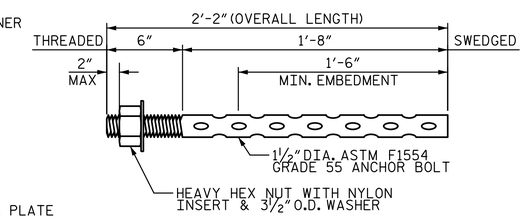

ANCHOR BOLT DETAIL

ANCHOR BOLT INSTALLATION NOTES

1. PLACE BEARING ASSEMBLY IN THE PLAN LOCATIONS AS SHOWN ON SHEETS TITLED "TEMPORARY SPAN STRUCTURAL STEEL (1 OF 3)", "PIER 2 TEMPORARY PEDESTAL" AND "PIER 3 TEMPORARY PEDESTAL".
2. INSTALL WASHER AND HEAVY HEX NUT ON ANCHOR BOLT IN ACCORDANCE WITH DIMENSIONS ON THIS SHEET.
3. FILL THE ANCHOR BLOCKOUT SHOWN ON SHEETS TITLED "PIER 2 TEMPORARY PEDESTAL" AND "PIER 3 TEMPORARY PEDESTAL" WITH EPOXY GROUT.
4. PLACE ANCHOR BOLT IN PREFORMED HOLE.
5. ALLOW EPOXY GROUT TO SET PRIOR TO SETTING GIRDERS ON BEARING ASSEMBLIES.

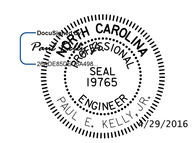

PROJECT NO. U-3308
DURHAM COUNTY
STATION: 24+55.20 -LALT-
13+22.18 -CSXN-
SHEET 14 OF 16

STATE OF NORTH CAROLINA
DEPARTMENT OF TRANSPORTATION
RALEIGH

TEMPORARY SPAN STRUCTURAL STEEL DETAILS (3 OF 3)

REVISIONS								SHEET NO.
NO.	BY:	DATE:	NO.	BY:	DATE:			S4-66
1			3					TOTAL SHEETS
2			4					68

DRAWN BY : NMC DATE : 06-14
CHECKED BY : DJM DATE : 06-14

DOCUMENT NOT CONSIDERED FINAL UNLESS ALL SIGNATURES COMPLETED

STV / Ralph Whitehead Associates, Inc.
900 W Trade Street, Suite 715
Charlotte, NC 28202
NC License No. F-0991

pkelly 4/29/2016 12:33:09 PM I:\PROJ\25325\ustation\struct\Temporary Span\404_065_U3308_SMU_TS14.dgn

DocuSign Envelope ID: 48A27C4D-A37A-43BA-95EE-BF2D2CDF1FAD

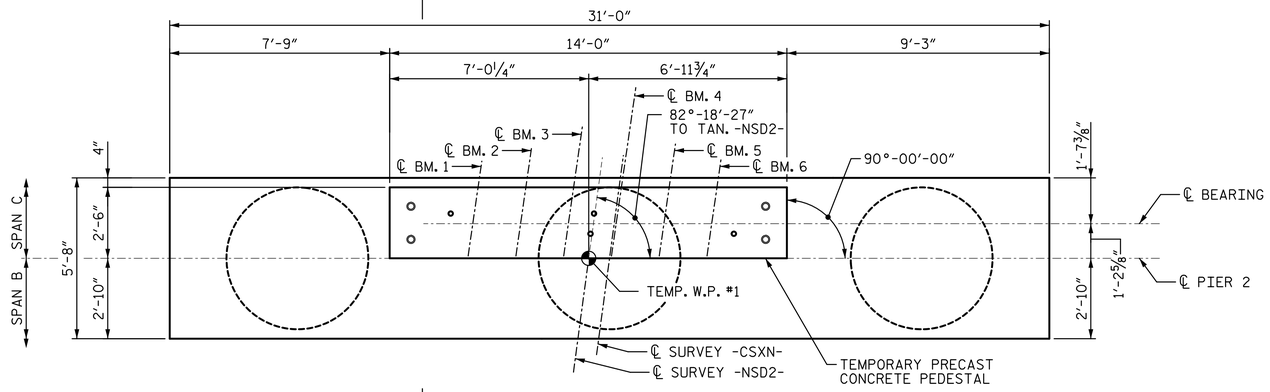

PLAN - PIER 2

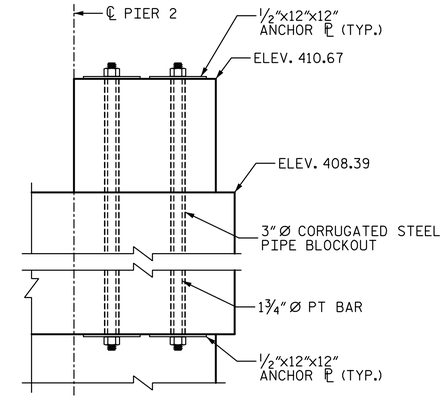

SECTION M-M

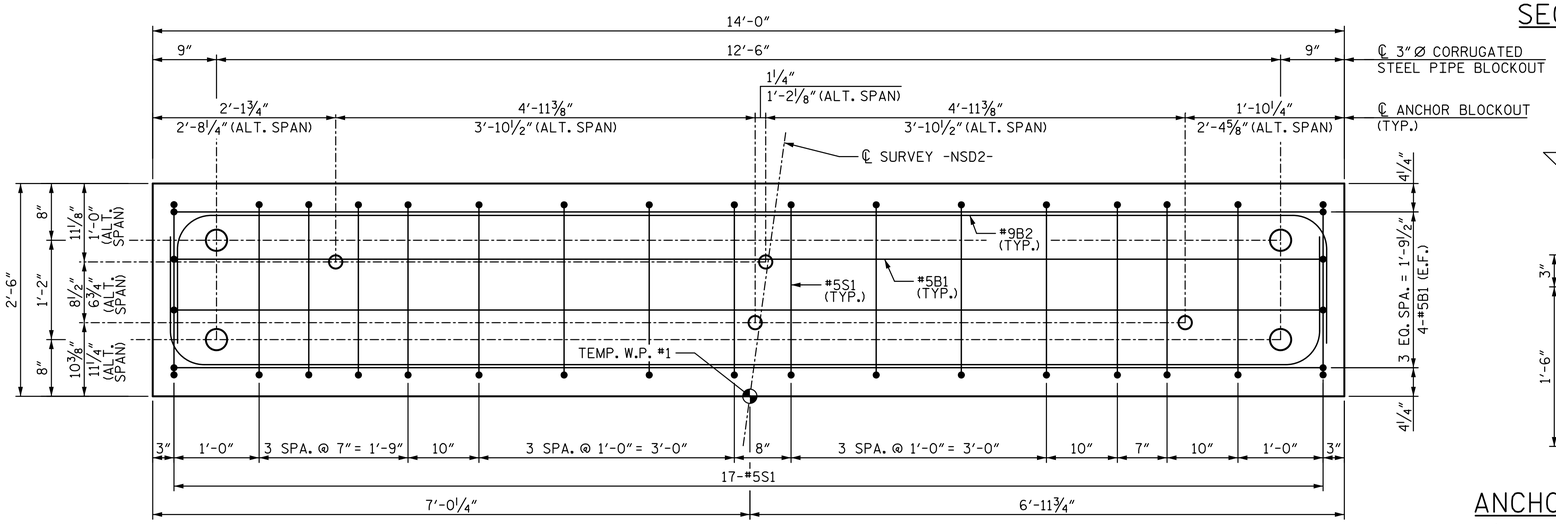

PLAN

(BAR SPACING EXAGGERATED FOR CLARITY)

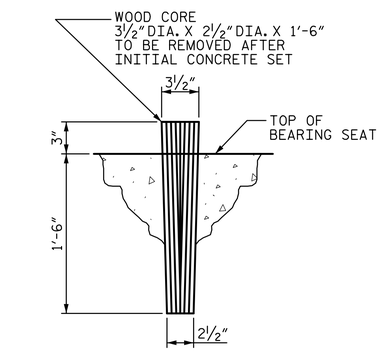

ANCHOR BLOCKOUT DETAIL

*IF FREEZING WEATHER IS ENCOUNTERED FILL HOLES WITH ANTIFREEZE AND SAWDUST.

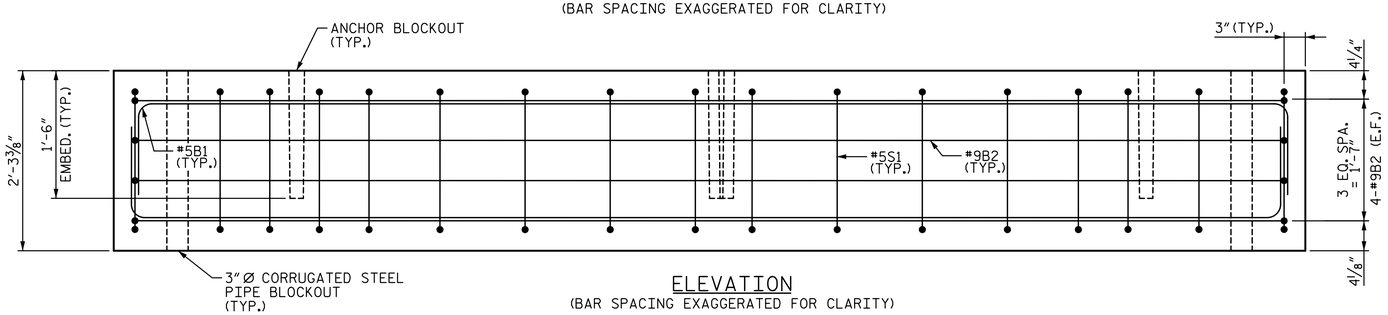

ELEVATION

(BAR SPACING EXAGGERATED FOR CLARITY)

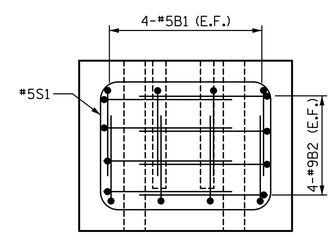

END VIEW

PIER 2 TEMPORARY PRECAST CONCRETE PEDESTAL

NOTES:

1. FOR TEMPORARY PEDESTAL CONSTRUCTION SEQUENCE, SEE SHEET TITLED "PIER 3 TEMPORARY PEDESTAL".
2. FOR TEMPORARY SPAN GENERAL NOTES, SEE SHEET TITLED "TEMPORARY SPAN GENERAL NOTES".
3. CONTRACTOR MAY ADJUST REINFORCING SLIGHTLY AS NECESSARY TO AVOID PREFORMED HOLES AND BLOCKOUTS.
4. FOR PT BAR, ASSEMBLY, AND ANCHOR PLATE DETAILS AND NOTES, SEE SHEET TITLED "PIER 3 TEMPORARY PEDESTAL".
5. CHAMFER ¾" X ¾" (TYP.)
6. PT = POST TENSIONED

REINFORCING BAR SCHEDULE

PIER 2 TEMPORARY PEDESTAL

MARK	NO.	SIZE	TYPE	LENGTH (ft. in.)	WEIGHT (lb.)
B1	8	5	2	15'-6"	130
B2	8	9	2	16'-8"	454
S1	17	5	1	8'-7"	152

BAR TYPES

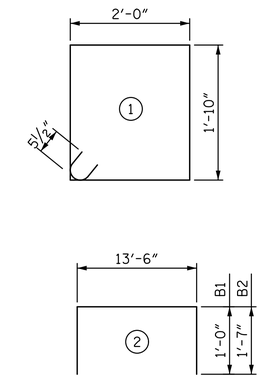

QUANTITIES - PIER 2 TEMPORARY PEDESTAL

ITEMS	UNIT	QUANTITY
PRECAST CONCRETE (5,000 PSI)	C.Y.	3.0
REINFORCING STEEL (60,000 PSI)	LBS.	736
½" PLATE	LBS.	163
1¾" DIA. PT BAR	LF	31.2

PROJECT NO. U-3308

DURHAM COUNTY

STATION: 24+55.20 -LALT-
13+22.18 -CSXN-

SHEET 15 OF 16

STATE OF NORTH CAROLINA
DEPARTMENT OF TRANSPORTATION
RALEIGH

PIER 2 TEMPORARY PEDESTAL

NORTH CAROLINA PROFESSIONAL SEAL 19765 ENGINEER PAUL E. KELLY, JR. 4/29/2016

DOCUSIGN PROFILE NOT ACCEPTED FOR THIS DOCUMENT

DRAWN BY : MTC DATE : 06-14
CHECKED BY : DJM DATE : 06-14

DOCUMENT NOT CONSIDERED FINAL UNLESS ALL SIGNATURES COMPLETED

STV / Ralph Whitehead Associates, Inc.
900 W Trade Street, Suite 715
Charlotte, NC 28202
NC License No. F-0991

REVISIONS								SHEET NO.
NO.	BY:	DATE:	NO.	BY:	DATE:			S4-67
1			3					TOTAL SHEETS
2			4					68

pkelly 4/29/2016 12:33:15 PM I:\PROJ\25325\ustation\struct\Temporary Span\404_066_U3308_SMU_TS15.dgn

DocuSign Envelope ID: 48A27C4D-A37A-43BA-95EE-BF2D2CDF1FAD

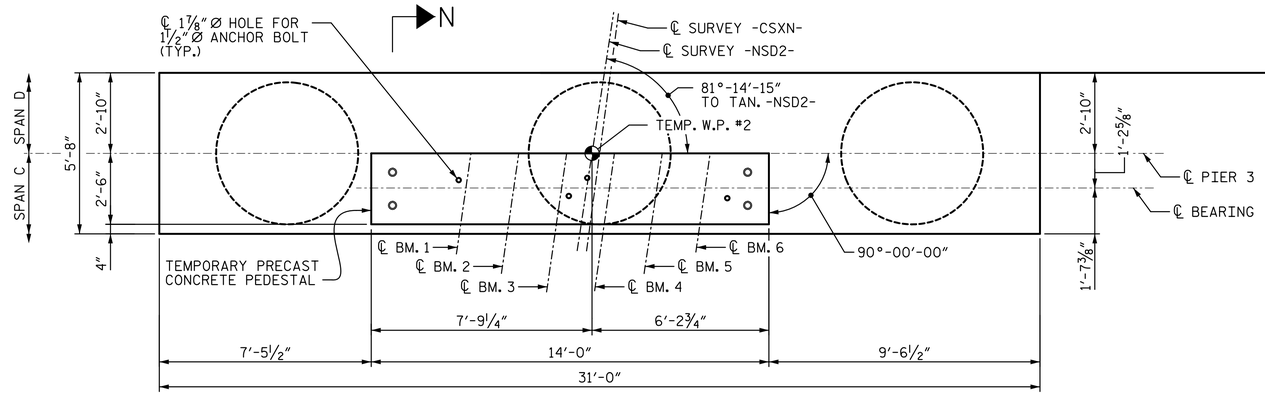

PLAN - PIER 3

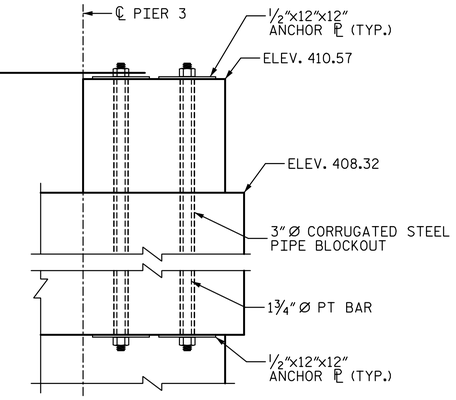

SECTION N-N

REINFORCING BAR SCHEDULE

PIER 3 TEMPORARY PEDESTAL

MARK	NO.	SIZE	TYPE	LENGTH (ft. in.)	WEIGHT (lb.)
B1	8	5	2	15'-6"	130
B2	8	9	2	16'-8"	454
S1	18	5	1	8'-7"	161

BAR TYPES

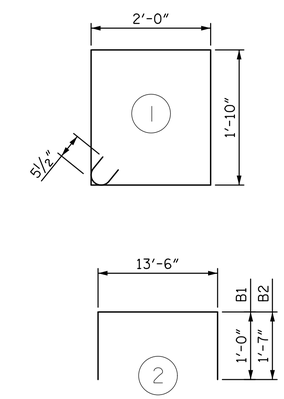

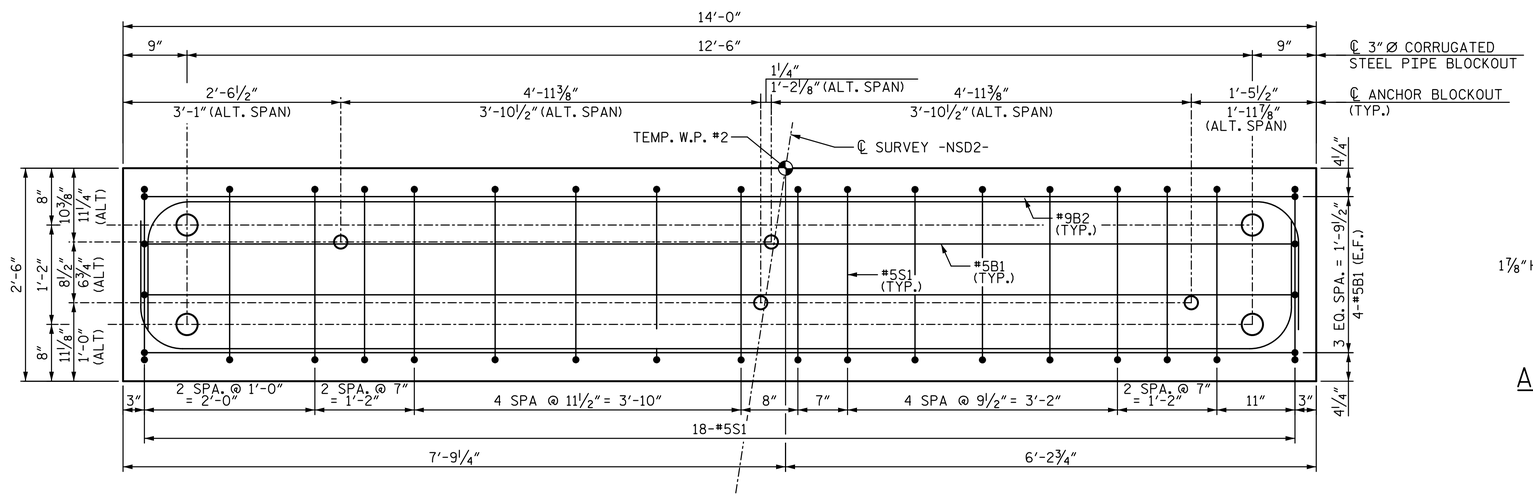

PLAN

(BAR SPACING EXAGGERATED FOR CLARITY)

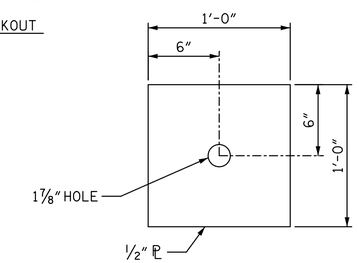

ANCHOR PLATE DETAIL

(QTY. 8 EA. PEDESTAL)

QUANTITIES - PIER 3 TEMPORARY PEDESTAL

ITEMS	UNIT	QUANTITY
PRECAST CONCRETE (5,000 PSI)	C.Y.	2.9
REINFORCING STEEL (60,000 PSI)	LBS.	745
½" PLATE	LBS.	163
1¾" DIA. PT BAR	LF	31.2

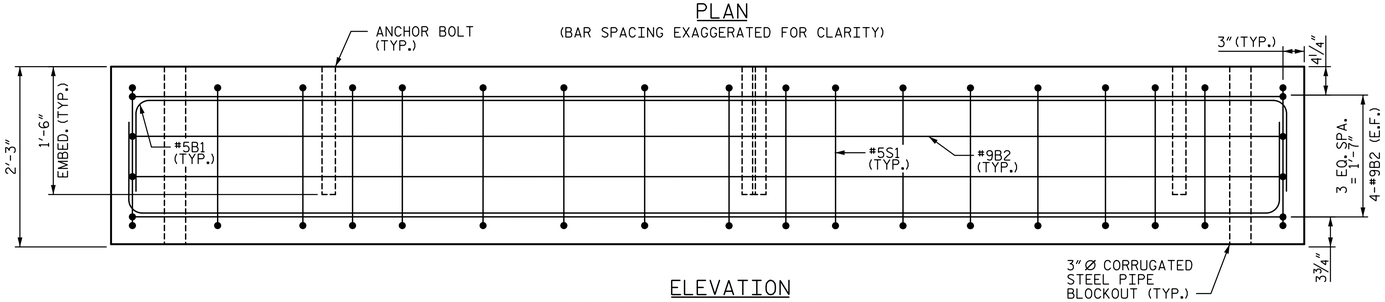

ELEVATION

(BAR SPACING EXAGGERATED FOR CLARITY)

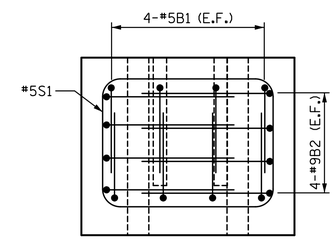

END VIEW

PIER 3 TEMPORARY PRECAST CONCRETE PEDESTAL

TEMPORARY PEDESTAL CONSTRUCTION PROCEDURE:

1. PLACE TEMPORARY PRECAST CONCRETE PEDESTAL ON PIER CAP.
2. INSTALL 1¾" DIA. PT BAR AND TENSION TO A FINAL FORCE OF 120 KIPS.
3. INSTALL BEARINGS AND ANCHORS FOR TEMPORARY SPAN.
4. UPON REMOVAL OF TEMPORARY SPAN, REMOVE TEMPORARY PEDESTAL AND PT BARS. GROUT 3" DIA. CORRUGATED BLOCKOUT IN PIER CAP USING NON-SHRINK GROUT.

NOTES:

1. FOR ANCHOR BLOCKOUT DETAIL, SEE SHEET TITLED "PIER 2 TEMPORARY PEDESTAL".
2. FOR TEMPORARY SPAN GENERAL NOTES, SEE SHEET TITLED "TEMPORARY SPAN GENERAL NOTES".
3. CONTRACTOR MAY ADJUST REINFORCING SLIGHTLY AS NECESSARY TO AVOID PREFORMED HOLES AND BLOCKOUTS.
4. FOR PT BAR, USE WILLIAMS FORM ENGINEERING CORP., "150-KSI ALL-THREAD-BAR" OR APPROVED EQUAL.
5. PT BAR ASSEMBLY AND PROTECTION SHALL BE INSTALLED PER MANUFACTURER'S RECOMMENDATIONS.
6. CHAMFER ¾" X ¾" (TYP.)
7. PT = POST TENSIONED

PROJECT NO. U-3308
DURHAM COUNTY
STATION: 24+55.20 -LALT-
13+22.18 -CSXN-

SHEET 16 OF 16

STATE OF NORTH CAROLINA
DEPARTMENT OF TRANSPORTATION
RALEIGH

PIER 3 TEMPORARY PEDESTAL

NORTH CAROLINA PROFESSIONAL SEAL 19765 ENGINEER BRIAN E. KELLY, JR. 4/29/2016

DOCUMENT NOT CONSIDERED FINAL UNLESS ALL SIGNATURES COMPLETED

STV / Ralph Whitehead Associates, Inc.
900 W Trade Street, Suite 715
Charlotte, NC 28202
NC License No. F-0991

REVISIONS							SHEET NO.
NO.	BY:	DATE:	NO.	BY:	DATE:		S4-68
1			3				TOTAL SHEETS
2			4				68

DRAWN BY : MTC DATE : 06-14
CHECKED BY : DJM DATE : 06-14

pkelly 4/29/2016 12:33:18 PM I:\PROJ\25\325\ustation\struct\Temporary Span\404_067_U3308_SMU_TS16.dgn