F.A. PROJ. NO: STP-55(20)

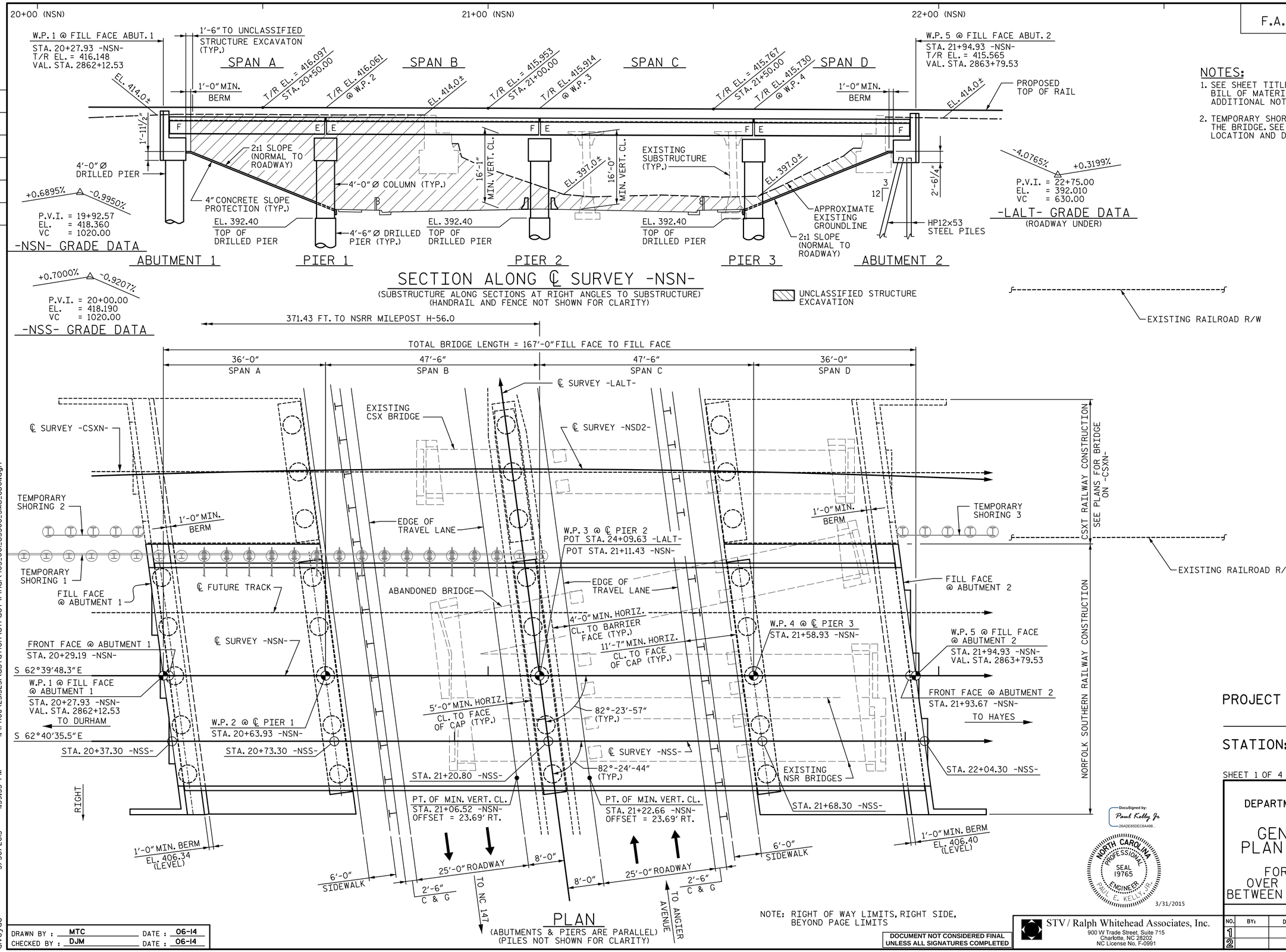

NOTES:

1. SEE SHEET TITLED "GENERAL DRAWING TOTAL BILL OF MATERIAL & GENERAL NOTES" FOR ADDITIONAL NOTES.
2. TEMPORARY SHORING IS REQUIRED TO CONSTRUCT THE BRIDGE. SEE TEMPORARY SHORING SHEETS FOR LOCATION AND DETAILS.

SECTION ALONG ℄ SURVEY -NSN-
(SUBSTRUCTURE ALONG SECTIONS AT RIGHT ANGLES TO SUBSTRUCTURE)
(HANDRAIL AND FENCE NOT SHOWN FOR CLARITY)

PLAN
(ABUTMENTS & PIERS ARE PARALLEL)
(PILES NOT SHOWN FOR CLARITY)

NOTE: RIGHT OF WAY LIMITS, RIGHT SIDE, BEYOND PAGE LIMITS

PROJECT NO. U-3308
DURHAM COUNTY
STATION: POT 24+09.63 -LALT-
POT 21+11.43 -NSN-

SHEET 1 OF 4 M.P. H-56.10

STATE OF NORTH CAROLINA
DEPARTMENT OF TRANSPORTATION
RALEIGH

GENERAL DRAWING
PLAN AND ELEVATION

FOR BRIDGE ON NSRR
OVER NC 55 (ALSTON AVE.)
BETWEEN NC 147 & ANGIER AVE.

DocuSigned by: Paul Kelly Jr. 26ADE85DEC6A498...
NORTH CAROLINA PROFESSIONAL SEAL 19765 ENGINEER PAUL E. KELLY, JR.
3/31/2015

REVISIONS								SHEET NO.
NO.	BY:	DATE:	NO.	BY:	DATE:			S3-1
1			3					TOTAL SHEETS
2			4					44

DRAWN BY : MTC DATE : 06-14
CHECKED BY : DJM DATE : 06-14

DOCUMENT NOT CONSIDERED FINAL UNLESS ALL SIGNATURES COMPLETED

STV / Ralph Whitehead Associates, Inc.
900 W Trade Street, Suite 715
Charlotte, NC 28202
NC License No. F-0991

dlveyac 3/30/2015 1:39:55 PM I:\PROJ\25325\ustation\structure\Final\403_001_U3308_SMU_GD01.dgn

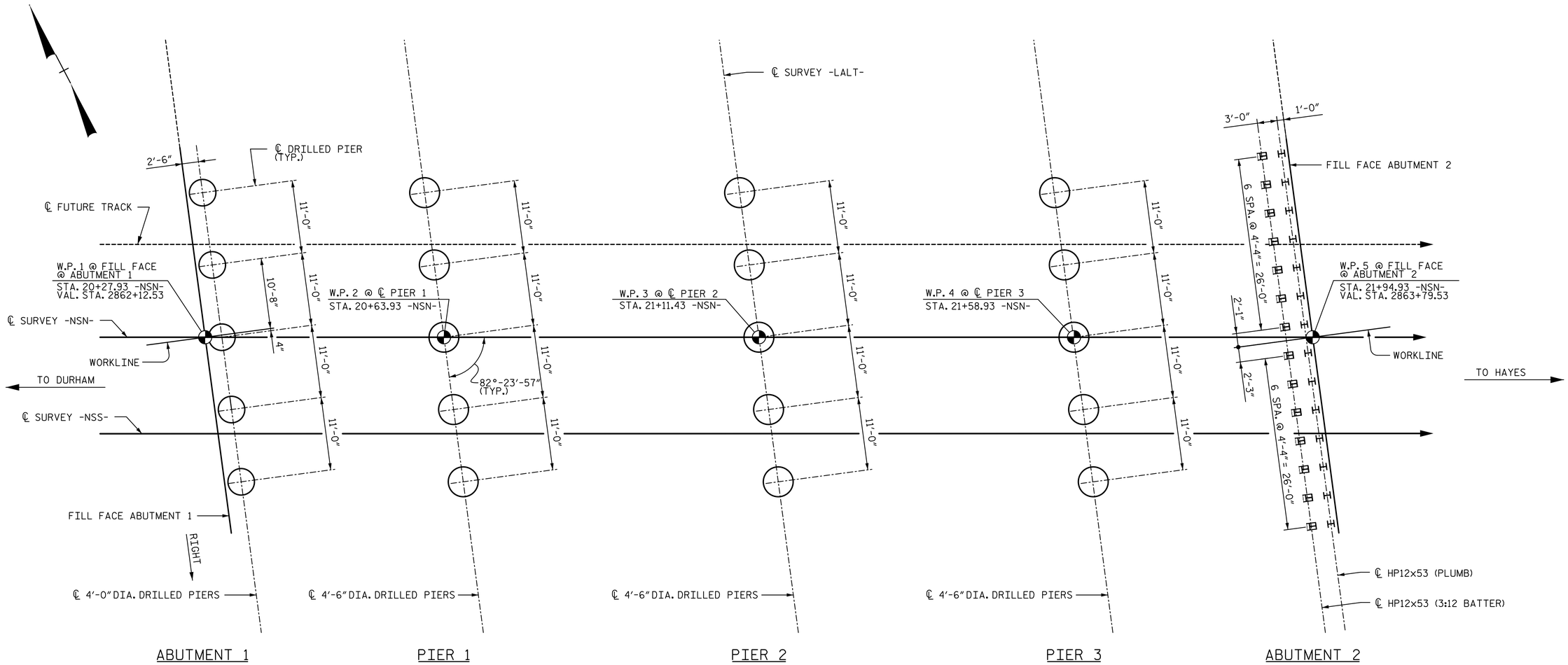

FOUNDATION LAYOUT

NOTES:

1. FOR PILES, SEE PILES (LFD-ASD) SPECIAL PROVISIONS.
2. DRIVE PILES AT ABUTMENT 2 TO A REQUIRED BEARING CAPACITY OF 130 TONS PER PILE. THE REQUIRED BEARING CAPACITY IS EQUAL TO THE ALLOWABLE BEARING CAPACITY WITH A MINIMUM FACTOR OF SAFETY OF TWO.
3. THE ALLOWABLE BEARING CAPACITY FOR PILES AT ABUTMENT 2 IS 65 TONS PER PILE.
4. FOR DRILLED PIERS, SEE LFD DRILLED PIERS SPECIAL PROVISIONS.
5. DRILLED PIERS AT ABUTMENT 1 ARE DESIGNED FOR BOTH SKIN FRICTION AND END BEARING. CHECK FIELD CONDITIONS FOR THE REQUIRED END BEARING CAPACITY OF 15 TSF.
6. DRILLED PIERS AT PIER 1, PIER 2 AND PIER 3 ARE DESIGNED FOR BOTH SKIN FRICTION AND END BEARING. CHECK FIELD CONDITIONS FOR THE REQUIRED END BEARING CAPACITY OF 40 TSF.
7. DRILLED PIERS AT ABUTMENT 1 ARE DESIGNED FOR AN APPLIED LOAD OF 165 TONS EACH AT THE TOP OF THE COLUMN.
8. DRILLED PIERS AT PIER 1, PIER 2 AND PIER 3 ARE DESIGNED FOR AN APPLIED LOAD OF 395 TONS EACH AT THE TOP OF THE COLUMN.
9. INSTALL DRILLED PIERS AT ABUTMENT 1 THAT EXTEND TO AN ELEVATION NO HIGHER THAN 382 FT (LT) AND 379 FT (CTR & RT) AND SATISFY THE REQUIRED END BEARING CAPACITY.
10. INSTALL DRILLED PIERS AT PIER 1 THAT EXTEND TO AN ELEVATION NO HIGHER THAN 381 FT (LT) AND 378 FT (CTR & RT) AND SATISFY THE REQUIRED END BEARING CAPACITY.
11. INSTALL DRILLED PIERS AT PIER 2 THAT EXTEND TO AN ELEVATION NO HIGHER THAN 376 FT (LT) AND 365 FT (CTR & RT) AND SATISFY THE REQUIRED END BEARING CAPACITY.
12. INSTALL DRILLED PIERS AT PIER 3 THAT EXTEND TO AN ELEVATION NO HIGHER THAN 373 FT AND SATISFY THE REQUIRED END BEARING CAPACITY.
13. DRILLED PIER EXCAVATIONS AT ABUTMENT 1 AND PIER 1 THROUGH PIER 3 WILL EXTEND INTO MATERIAL THAT DETERIORATES WHEN EXPOSED TO THE ELEMENTS. CHECK FIELD CONDITIONS FOR THE REQUIRED END BEARING CAPACITY AND PLACE CONCRETE IMMEDIATELY AFTER THE EXCAVATION IS COMPLETED.
14. SPT TESTING IS REQUIRED FOR DRILLED PIERS AT ABUTMENT 1 AND PIER 2.
15. SID INSPECTIONS MAY BE REQUIRED FOR DRILLED PIERS. THE ENGINEER WILL DETERMINE THE NEED FOR SID INSPECTIONS.
16. CSL TUBES AND TESTING ARE REQUIRED FOR DRILLED PIERS AT ABUTMENT 1 AND PIER 1 THROUGH PIER 3.

PROJECT NO. U-3308
DURHAM COUNTY
STATION: POT 24+09.63 -LALT-
POT 21+11.43 -NSN-

SHEET 2 OF 4 M.P. H-56.10

DocuSigned by: Paul Kelly Jr. 26ADE85DEC6A498...

NORTH CAROLINA PROFESSIONAL SEAL 19765 ENGINEER PAUL E. KELLY, JR.
3/31/2015

STATE OF NORTH CAROLINA
DEPARTMENT OF TRANSPORTATION
RALEIGH

GENERAL DRAWING
FOUNDATION LAYOUT

FOR BRIDGE ON NSRR
OVER NC 55 (ALSTON AVE.)
BETWEEN NC 147 & ANGIER AVE.

REVISIONS						
NO.	BY:	DATE:	NO.	BY:	DATE:	
1			3			
2			4			

SHEET NO. S3-2
TOTAL SHEETS 44

DOCUMENT NOT CONSIDERED FINAL UNLESS ALL SIGNATURES COMPLETED

STV / Ralph Whitehead Associates, Inc.
900 W Trade Street, Suite 715
Charlotte, NC 28202
NC License No. F-0991

DRAWN BY : RSB DATE : 06-14
CHECKED BY : DJM DATE : 06-14

alveyac 3/30/2015 1:39:55 PM I:\PROJ\25I325I\ustation\struct\Final\403_002_U3308_SMU_GD02.dgn

BENCHMARK 503

BM 503 IS LOCATED AT STA. 18+79.99 -NSN- (VAL. STA. 2860+64.59) AT AN OFFSET OF 45.9' RIGHT. BM 503 IS A R/R SPIKE SET IN 15" PIN OAK. EL. = 414.78

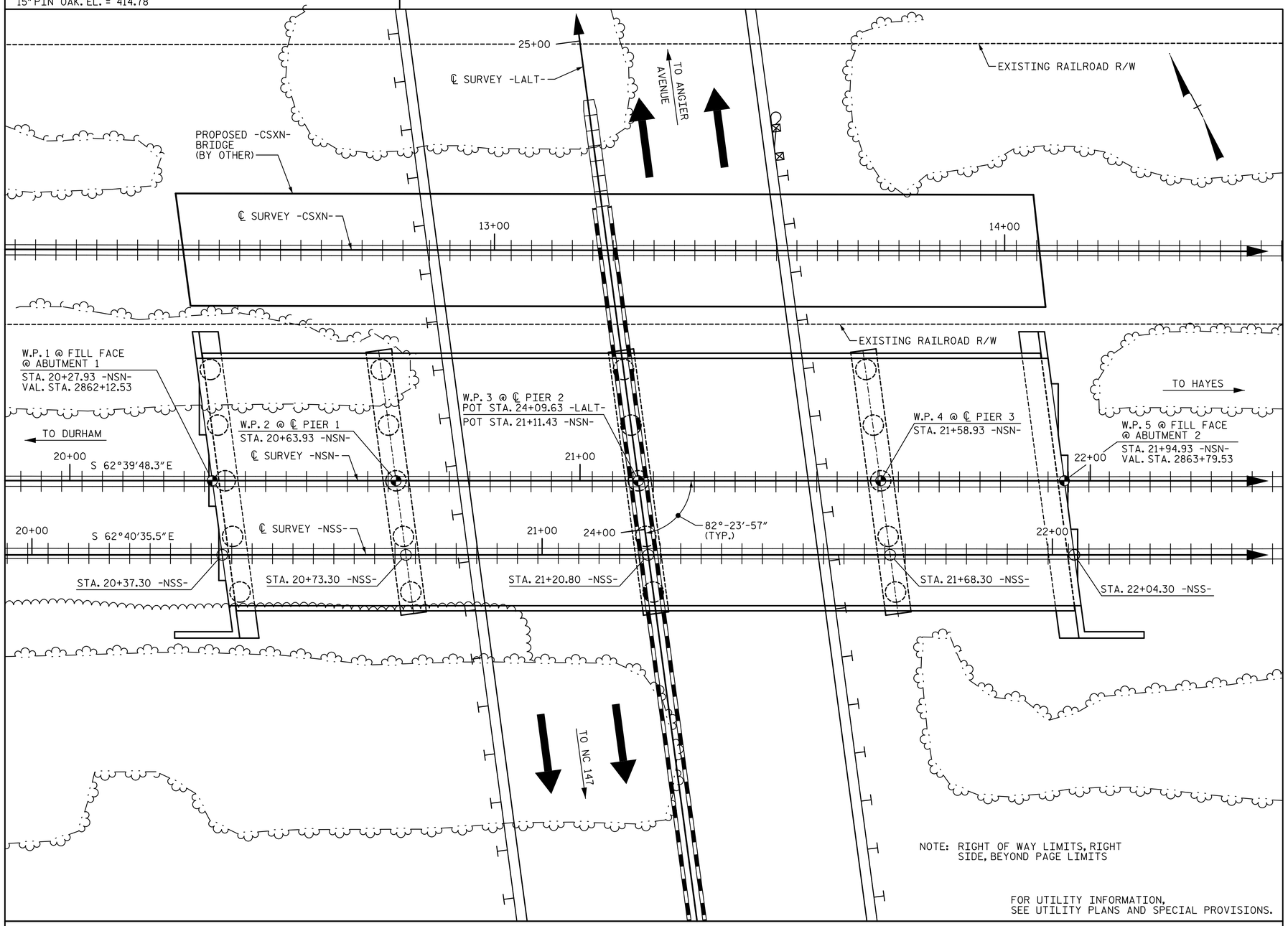

NOTE: RIGHT OF WAY LIMITS, RIGHT SIDE, BEYOND PAGE LIMITS

FOR UTILITY INFORMATION, SEE UTILITY PLANS AND SPECIAL PROVISIONS.

LOCATION SKETCH

DocuSigned by: Paul Kelly Jr 26ADE85DEC6A498...

NORTH CAROLINA PROFESSIONAL SEAL 19765 ENGINEER PAUL E. KELLY, JR. 3/31/2015

PROJECT NO. U-3308

DURHAM COUNTY

STATION: POT 24+09.63 -LALT-
POT 21+11.43 -NSN-

SHEET 3 OF 4 M.P. H-56.10

STATE OF NORTH CAROLINA
DEPARTMENT OF TRANSPORTATION
RALEIGH

GENERAL DRAWING LOCATION SKETCH

FOR BRIDGE ON NSRR OVER NC 55 (ALSTON AVE.) BETWEEN NC 147 & ANGIER AVE.

REVISIONS							SHEET NO.
NO.	BY:	DATE:	NO.	BY:	DATE:		S3-3
1			3				TOTAL SHEETS
2			4				44

DRAWN BY : NMC DATE : 06-14
CHECKED BY : DJM DATE : 06-14

DOCUMENT NOT CONSIDERED FINAL UNLESS ALL SIGNATURES COMPLETED

STV / Ralph Whitehead Associates, Inc.
900 W Trade Street, Suite 715
Charlotte, NC 28202
NC License No. F-0991

TOTAL BILL OF MATERIALS

	TEMPORARY RAILROAD SHORING	REMOVAL OF EXISTING STRUCTURES	4'-6" DIA. DRILLED PIER IN SOIL (LFD)	4'-0" DIA. DRILLED PIER IN SOIL (LFD)	4'-6" DIA. DRILLED PIER NOT IN SOIL (LFD)	4'-0" DIA. DRILLED PIER NOT IN SOIL (LFD)	SID INSPECTIONS (LFD)	SPT TESTING (LFD)	CSL TESTING (LFD)	UNCLASSIFIED STRUCTURE EXCAVATION	REINFORCED CONCRETE DECK SLAB	CONCRETE	REINFORCING STEEL	SPIRAL COLUMN REINFORCING STEEL	APPROX. 755,000 LBS. STRUCTURAL STEEL	PAINTING OF STRUCTURAL STEEL	HP12X53 STEEL PILES (LFD)		1'-0" x 2'-0" CONCRETE BARRIER RAIL	4" SLOPE PROTECTION	STRUCTURE DRAINAGE SYSTEM
	LUMP SUM	LUMP SUM	LIN. FT.	LIN. FT.	LIN. FT.	LIN. FT.	EACH	EACH	EACH	LUMP SUM	SQ. FT.	CU. YDS.	LBS.	LBS.	LUMP SUM	LUMP SUM	NO.	LIN. FT.	LIN. FT.	SQ. YDS.	LUMP SUM
SUPERSTRUCTURE											8,278				LUMP SUM	LUMP SUM			328.3		LUMP SUM
ABUTMENT 1				86.5		35		5	5			83.0	30,164	5,549						233	
PIER 1			18.5		48				5			75.8	22,468	6,094							
PIER 2			70.5		45			5	5			75.5	26,633	8,386							
PIER 3			57.5		40				5			75.2	25,103	7,494							
ABUTMENT 2												90.8	14,367				28	840		233	
TOTAL	LUMP SUM	LUMP SUM	146.5	86.5	133	35	20	10	20	LUMP SUM	8,278	400.3	118,735	27,523	LUMP SUM	LUMP SUM	28	840	328.3	466	LUMP SUM

TOTAL BILL OF MATERIALS CONT'D.

	DAMPPROOFING (RAILROAD STRUCTURES)	TWO PART MEMBRANE WATER PROOFING SYSTEM	MEMBRANE LAYER WATER PROOFING SYSTEM FOR DECK	1" ASPHALT PLANKING PROTECTIVE COURSE FOR DECK	HANDRAIL AND FENCE	SELF-LUBRICATING EXPANSION BEARING ASSEMBLES	CONDUIT IN PARAPET	ASBESTOS ASSESSMENT
	SQ. YDS.	SQ. YDS.	SQ. YDS.	SQ. YDS.	LIN. FT.	LUMP SUM	LUMP SUM	LUMP SUM
SUPERSTRUCTURE			913	913	326.0	LUMP SUM	LUMP SUM	
ABUTMENT 1	84	18.8			22.1			
PIER 1	21							
PIER 2	12							
PIER 3	21							
ABUTMENT 2	84	18.8			22.1			
TOTAL	222	37.6	913	913	370.2	LUMP SUM	LUMP SUM	LUMP SUM

GENERAL NOTES

1. ASSUMED LIVE LOAD: AREMA E80 OR ALTERNATE LIVE LOAD.

2. FOR OTHER DESIGN DATA AND GENERAL NOTES, SEE SHEET SN.

3. THIS BRIDGE HAS BEEN DESIGNED IN ACCORDANCE WITH THE REQUIREMENTS OF THE CURRENT EDITION OF AREMA'S "MANUAL FOR RAILWAY ENGINEERING, VOL. 2, STRUCTURES", AND NORFOLK SOUTHERN CORPORATION'S "GUIDELINES FOR DESIGN OF HIGHWAY SEPARATION STRUCTURES UNDER RAILROAD (UNDERPASS GRADE SEPARATION)".

4. THIS BRIDGE HAS BEEN DESIGNED IN ACCORDANCE WITH THE REQUIREMENTS OF THE AASHTO STANDARD SPECIFICATIONS FOR SEISMIC DESIGN OF HIGHWAY BRIDGES FOR SEISMIC ZONE 1.

5. REINFORCING STEEL SHALL BE ASTM 615, GRADE 60. ALL DIMENSIONS RELATING TO BAR SPACING ARE TO BAR CENTERS UNLESS NOTED OTHERWISE. FABRICATION IS TO BE IN ACCORDANCE WITH THE "MANUAL OF STANDARD PRACTICE", ACI 315-80. ALL REINFORCING IN THE CONCRETE DECK SLAB AND PARAPETS SHALL BE EPOXY COATED.

6. EXPANSION JOINT MATERIAL SHALL BE EITHER RUBBER OR CORK CONFORMING WITH AASHTO SPECIFICATIONS M-153-84 EXCEPT AS SHOWN ON THE PLANS OR IN THE SPECIAL PROVISIONS. CELLULAR AND BULB TYPE WATERSTOPS AND RUBBER JOINT COMPOUNDS SHALL BE SHOWN ON THE PLANS AND IN THE SPECIAL PROVISIONS.

7. STRUCTURE DRAINAGE SYSTEM: METAL DRAINS BEHIND ABUTMENTS AND DUCTILE IRON PIPE COLLECTOR SYSTEM SHALL BE AS SHOWN ON THE PLANS AND OUTLINED IN THE SPECIAL PROVISIONS. DETAILS OF THE DRAINAGE SYSTEM SHALL BE SUBMITTED TO THE CHIEF ENGINEER, BRIDGES AND STRUCTURES, NORFOLK SOUTHERN CORPORATION, ATLANTA, GA FOR APPROVAL.

8. DAMPPROOFING: PIER COLUMNS UP TO THE GROUND LINE, BACK OF BACKWALLS, ABUTMENT SEATS AND BACK OF WINGS SHALL BE DAMPPROOFED, IN ACCORDANCE WITH AREMA CHAPTER 8, PART 29. SEE SPECIAL PROVISIONS FOR NS SPECIFICATIONS FOR CAST-IN-PLACE CONCRETE.

9. WATERPROOFING: ALL CONSTRUCTION JOINTS AND ANY SHRINKAGE CRACKS WHICH WILL BE COVERED BY FILL, SHALL BE WATERPROOFED WITH A TWO PART WATERPROOFING SYSTEM, CONSISTING OF A MEMBRANE LAYER AND A PROTECTIVE COURSE. STRIPS OF WATERPROOFING NO LESS THAN 2 FEET WIDE SHALL BE PLACED SYMMETRICALLY OVER JOINTS. THE ENTIRE BRIDGE DECK SHALL BE WATERPROOFED WITH A TWO PART WATERPROOFING SYSTEM, CONSISTING OF A MEMBRANE LAYER AND A 1 INCH THICK ASPHALT PLANKING OR OTHER RAILWAY APPROVED PROTECTION MATERIAL. ALL WATERPROOFING MATERIALS SHALL CONFORM TO THE RECOMMENDED PRACTICES IN THE AREMA MANUAL OF RAILWAY ENGINEERING CHAPTER 8, PART 29.

10. FOR WATERPROOFING, SEE SPECIAL PROVISIONS.

11. FOR WATERSTOPS, SEE SPECIAL PROVISIONS.

12. THE CONTRACTOR SHALL PROVIDE INDEPENDENT ASSURANCE SAMPLES OF REINFORCING STEEL AS FOLLOWS: FOR PROJECTS REQUIRING UP TO 400 TONS OF REINFORCING STEEL, ONE 30 INCH SAMPLE OF EACH SIZE BAR USED, AND FOR PROJECTS REQUIRING OVER 400 TONS OF REINFORCING STEEL, TWO 30 INCH SAMPLES OF EACH SIZE BAR USED. THE BARS FROM WHICH THE SAMPLES ARE TAKEN MUST THEN BE SPLICED WITH REPLACEMENT BARS OF THE SIZE AND LENGTH OF THE SAMPLE PLUS A MINIMUM LAP SPLICE OF THIRTY BAR DIAMETERS. PAYMENT FOR THE SAMPLES OF REINFORCING STEEL SHALL BE CONSIDERED INCIDENTAL TO VARIOUS PAY ITEMS.

13. ALL MATERIALS AND WORKMANSHIP SHALL BE IN ACCORDANCE WITH "STANDARD SPECIFICATIONS FOR ROADS AND STRUCTURES", JANUARY 2012, NORTH CAROLINA DEPARTMENT OF TRANSPORTATION (HEREIN CALLED STANDARD SPECIFICATIONS), EXCEPT AS NOTED HEREIN, ELSEWHERE ON PLANS, OR IN THE SPECIAL PROVISIONS. STRUCTURAL STEEL IN ACCORDANCE WITH CURRENT AREMA SPECIFICATIONS AND NORFOLK SOUTHERN'S "SPECIFICATIONS FOR STEEL".

14. ALL CONCRETE USED IN THE SUPERSTRUCTURE (DECK AND CURBS) SHALL BE MIN. 5,000 PSI CONCRETE AND ALL CONCRETE USED IN THE SUBSTRUCTURE SHALL BE MIN. 4,000 PSI CONCRETE, WITH NO.57 OR 67 COARSE AGGREGATE AND SHALL BE AIR-ENTRAINED. MINIMUM CEMENT PER CUBIC YARD OF CONCRETE SHALL BE 6.5 BAGS. NO SUBSTITUTION OF FLY ASH, BLAST FURNACE SLAG OR OTHER MATERIAL WILL BE PERMITTED IN MEETING THIS MINIMUM CEMENT REQUIREMENT. CHAMFER ALL EXPOSED EDGES AND CORNERS ¾" EXCEPT AS NOTED ON THE PLANS. THE USE OF GROUND GRANULATED BLAST FURNACE SLAG IS NOT PERMITTED IN THIS STRUCTURE.

15. CONTROL OF WORK: ALL WORK INVOLVED IN THE CONSTRUCTION OF THE RAILWAY STRUCTURE SHALL BE PERFORMED SATISFACTORY TO THE ENGINEER AND/OR NORFOLK SOUTHERN RAILWAY COMPANY. ALL METHODS OF HANDLING THE WORK AFFECTING THE SAFETY OF RAIL OPERATIONS MUST BE APPROVED BY THE RAILWAY COMPANY BEFORE PROCEEDING WITH THAT PORTION OF THE WORK. RAIL TRAFFIC SHALL, AT ALL TIMES, BE MAINTAINED AND PROTECTED. THE CONTRACTOR SHALL NOT AT ANY TIME DELAY OR INTERFERE WITH RAIL OPERATIONS.

16. NEEDLE BEAMS WILL NOT BE ALLOWED UNLESS OTHERWISE CALLED FOR ON THE PLANS OR APPROVED BY THE ENGINEER.

17. FOR SELF-LUBRICATING EXPANSION BEARING ASSEMBLIES, SEE SPECIAL PROVISIONS.

18. FOR CONDUITS IN PARAPETS, SEE SPECIAL PROVISIONS.

19. FOR PORTLAND CEMENT, SEE SPECIAL PROVISIONS.

20. FOR FINE AND COARSE AGGREGATE, SEE SPECIAL PROVISIONS.

21. SEE "STRUCTURAL STEEL NOTES" SHEET FOR ADDITIONAL NOTES.

22. FOR RUBBER JOINT COMPOUNDS, SEE SPECIAL PROVISIONS.

23. FOR STRUCTURE DRAINAGE SYSTEM, SEE SPECIAL PROVISIONS.

24. FOR RAILROAD TRACKWORK, SEE RAILROAD TRACKWORK PLANS.

25. FOR SUBMITTAL OF WORKING DRAWINGS, SEE SPECIAL PROVISIONS.

26. FOR FALSEWORK AND FORMWORK, SEE SPECIAL PROVISIONS.

27. FOR CRANE SAFETY, SEE SPECIAL PROVISIONS.

28. FOR GROUT FOR STRUCTURES, SEE SPECIAL PROVISIONS.

29. FOR CAST-IN-PLACE CONCRETE, SEE "NS SPECIFICATIONS FOR CAST-IN-PLACE CONCRETE" SPECIAL PROVISION.

30. WORK SHALL NOT BEGIN ON THIS BRIDGE UNTIL THE TEMPORARY SHORING HAS BEEN INSTALLED AND APPROVED, THE SITE EXCAVATED TO THE APPROVED TEMPORARY GRADE ELEVATIONS, AND THE NECESSARY TEMPORARY EROSION CONTROL AND SEDIMENT CONTROL MEASURES INSTALLED AND ACCEPTED.

31. FOR TEMPORARY RAILROAD SHORING, SEE SPECIAL PROVISIONS.

32. FOR BACKFILL BEHIND ABUTMENTS AND OTHER BACKFILL AROUND THE STRUCTURE, SEE SPECIAL PROVISION "BACKFILLING AROUND STRUCTURES".

33. FOR PAINTING STRUCTURAL STEEL, SEE SPECIAL PROVISIONS FOR "NS SPECIFICATIONS FOR PAINTING SHOP FABRICATED BRIDGE STEEL".

34. FOR ELASTOMERIC FLASHING, SEE SPECIAL PROVISIONS.

35. FOR PROTECTION OF RAILWAY INTERESTS, SEE SPECIAL PROVISIONS.

36. FOR RAILROAD ROADBED, SEE RAILROAD ROADBED SPECIAL PROVISIONS.

37. FOR MAINTENANCE AND PROTECTION OF TRAFFIC BENEATH PROPOSED STRUCTURE, SEE SPECIAL PROVISIONS.

38. FOR EROSION CONTROL MEASURES, SEE EROSION CONTROL PLANS.

39. ALL CONSTRUCTION JOINTS SHOWN ON THESE PLANS SHALL BE REQUIRED UNLESS SHOWN OPTIONAL. CONSTRUCTION JOINTS SHALL NOT BE PERMITTED EXCEPT AS SHOWN ON THE PLANS, OR WHERE WRITTEN APPROVAL HAS BEEN OBTAINED.

40. BENCHMARK: SEE LOCATION SKETCH.

41. DIRECT TENSION INDICATORS (DTI) WILL NOT BE PERMITTED. USE THE TURN-OF-NUT METHOD FOR INSTALLING AND TIGHTENING HIGH STRENGTH BOLTS.

42. THE RAILROAD TRACK TOP OF RAIL ELEVATIONS ON THE PLANS ARE FROM THE BEST INFORMATION AVAILABLE. PRIOR TO BEGINNING BRIDGE CONSTRUCTION, VERIFY THE TOP OF RAIL ELEVATIONS AND REPORT ANY VARIATIONS TO THE ENGINEER. ANY PLAN REVISIONS NECESSARY TO ACHIEVE THE REQUIRED MINIMUM CLEARANCE WILL BE PROVIDED BY THE DEPARTMENT.

43. FOR UTILITY INFORMATION, SEE UTILITY PLANS AND SPECIAL PROVISIONS.

44. THE CONTRACTOR IS REMINDED THAT WORK ON THIS PROJECT REQUIRES WORKING NEAR EXISTING STRUCTURES. EVERY EFFORT HAS BEEN MADE TO IDENTIFY DISCREPANCIES AND ENSURE THAT THE DETAILS ARE DEPICTED CORRECTLY. HOWEVER, SINCE THE PROJECT INVOLVES WORKING NEAR EXISTING STRUCTURES, THE CONTRACTOR CAN EXPECT AND SHOULD PLAN ON ENCOUNTERING VARIANCES AND DEVIATIONS BETWEEN THE INFORMATION FOUND IN THESE DRAWINGS AND THE EXISTING CONDITIONS. ACTUAL FIELD CONDITIONS MAY REQUIRE MODIFICATIONS IN CONSTRUCTION DETAILS AND QUANTITIES. THE CONTRACTOR IS RESPONSIBLE TO FIELD VERIFY ALL DETAILS INCLUDING GEOMETRY AND ELEVATIONS PRIOR TO THE INSTALLATION OF ANY MATERIAL. THE CONTRACTOR SHALL SUBMIT TO NCDOT AND NORFOLK SOUTHERN COPIES OF FIELD SURVEYS AND VERIFICATIONS FOR INCLUSION INTO THE CONSTRUCTION RECORDS FOR THE PROJECT.

45. FOR REINFORCED CONCRETE DECK SLAB, SEE SPECIAL PROVISION FOR NS SPECIFICATIONS FOR CAST-IN-PLACE CONCRETE. FOR MEASUREMENT AND PAYMENT OF REINFORCED CONCRETE DECK SLAB, SEE THE STANDARD SPECIFICATIONS.

46. FOR STRUCTURAL STEEL, SEE SPECIAL PROVISIONS FOR NS SPECIFICATIONS FOR STRUCTURAL STEEL.

47. AFTER SERVING AS TEMPORARY STRUCTURES, THE THREE EXISTING STRUCTURES CONSISTING OF 3 SPANS WITH TWO STEEL BEAMS AND TIMBER RAIL TIES AND A BUILT-UP STEEL LATTICE FRAME SUBSTRUCTURE AND LOCATED APPROXIMATELY AT THE LOCATION OF THE NEW BRIDGE SHALL BE REMOVED. THE EXISTING BRIDGE IS PRESENTLY NOT POSTED FOR LOAD LIMIT. SHOULD THE STRUCTURAL INTEGRITY OF THE BRIDGE DETERIORATE DURING CONSTRUCTION OF THE PROPOSED BRIDGE, A LOAD LIMIT MAY BE POSTED AND MAY BE REDUCED AS FOUND NECESSARY DURING THE LIFE OF THE PROJECT.

48. THE MATERIAL SHOWN IN THE CROSS-HATCHED AREA SHALL BE EXCAVATED FOR A DISTANCE OF 31'-0" TO THE RIGHT OF -NSN- AND 29'-2" TO THE LEFT OF -NSN- AS DIRECTED BY THE ENGINEER. THIS WORK WILL BE PAID FOR AT THE CONTRACT LUMP SUM PRICE FOR UNCLASSIFIED STRUCTURE EXCAVATION. SEE SECTION 412 OF THE STANDARD SPECIFICATIONS.

49. THE SUBSTRUCTURE OF THE EXISTING BRIDGE INDICATED ON THE PLANS IS FROM THE BEST INFORMATION AVAILABLE. SINCE THIS INFORMATION IS SHOWN FOR THE CONVENIENCE OF THE CONTRACTOR, THE CONTRACTOR SHALL HAVE NO CLAIM WHATSOEVER AGAINST THE DEPARTMENT OF TRANSPORTATION FOR ANY DELAYS OR ADDITIONAL COST INCURRED BASED ON DIFFERENCES BETWEEN THE EXISTING BRIDGE SUBSTRUCTURE SHOWN ON THE PLANS AND THE ACTUAL CONDITIONS AT THE PROJECT SITE.

50. FOR HANDRAIL AND FENCE, SEE SPECIAL PROVISIONS.

51. INASMUCH AS THE PAINT SYSTEM ON THE EXISTING STRUCTURAL STEEL CONTAINS LEAD, THE CONTRACTOR'S ATTENTION IS DIRECTED TO ARTICLE 107-1 OF THE STANDARD SPECIFICATIONS. ANY COSTS RESULTING FROM COMPLIANCE WITH APPLICABLE STATE OR FEDERAL REGULATIONS PERTAINING TO HANDLING OF MATERIALS CONTAINING LEAD BASED PAINT SHALL BE INCLUDED IN THE BID PRICE FOR REMOVAL OF EXISTING STRUCTURE STA. 24+09.63 -LALT-.

52. THE LOCATION OF THE CONSTRUCTION JOINT IN THE DRILLED PIERS IS BASED ON AN APPROXIMATE GROUND LINE ELEVATION. IF THE CONSTRUCTION JOINT IS ABOVE THE ACTUAL GROUND ELEVATION, THE CONTRACTOR SHALL PLACE THE CONSTRUCTION JOINT 1 FT BELOW THE GROUND LINE.

53. FOR ASBESTOS ASSESSMENT FOR BRIDGE DEMOLITION AND RENOVATION ACTIVITIES, SEE SPECIAL PROVISIONS.

PROJECT NO. U-3308
DURHAM COUNTY
STATION: POT 24+09.63 -LALT-
POT 21+11.43 -NSN-

SHEET 4 OF 4 M.P. H-56.10

STATE OF NORTH CAROLINA
DEPARTMENT OF TRANSPORTATION
RALEIGH

GENERAL DRAWING
TOTAL BILL OF MATERIAL
& GENERAL NOTES
FOR BRIDGE ON NSRR
OVER NC 55 (ALSTON AVE.)
BETWEEN NC 147 & ANGIER AVE.

NORTH CAROLINA PROFESSIONAL SEAL 19765 ENGINEER PAUL E. KELLY, JR. 4/29/2016

STV / Ralph Whitehead Associates, Inc.
900 W Trade Street, Suite 715
Charlotte, NC 28202
NC License No. F-0991

REVISIONS						SHEET NO.
NO.	BY:	DATE:	NO.	BY:	DATE:	S3-4
1			3			TOTAL SHEETS
2			4			44

DRAWN BY : NMC DATE : 06-14
CHECKED BY : DJM DATE : 06-14

pKelly 4/29/2016 8:10:21 AM I:\PROJ\25|325\ustation\struct\Final\403_004_U3308_SMU_GD04.dgn

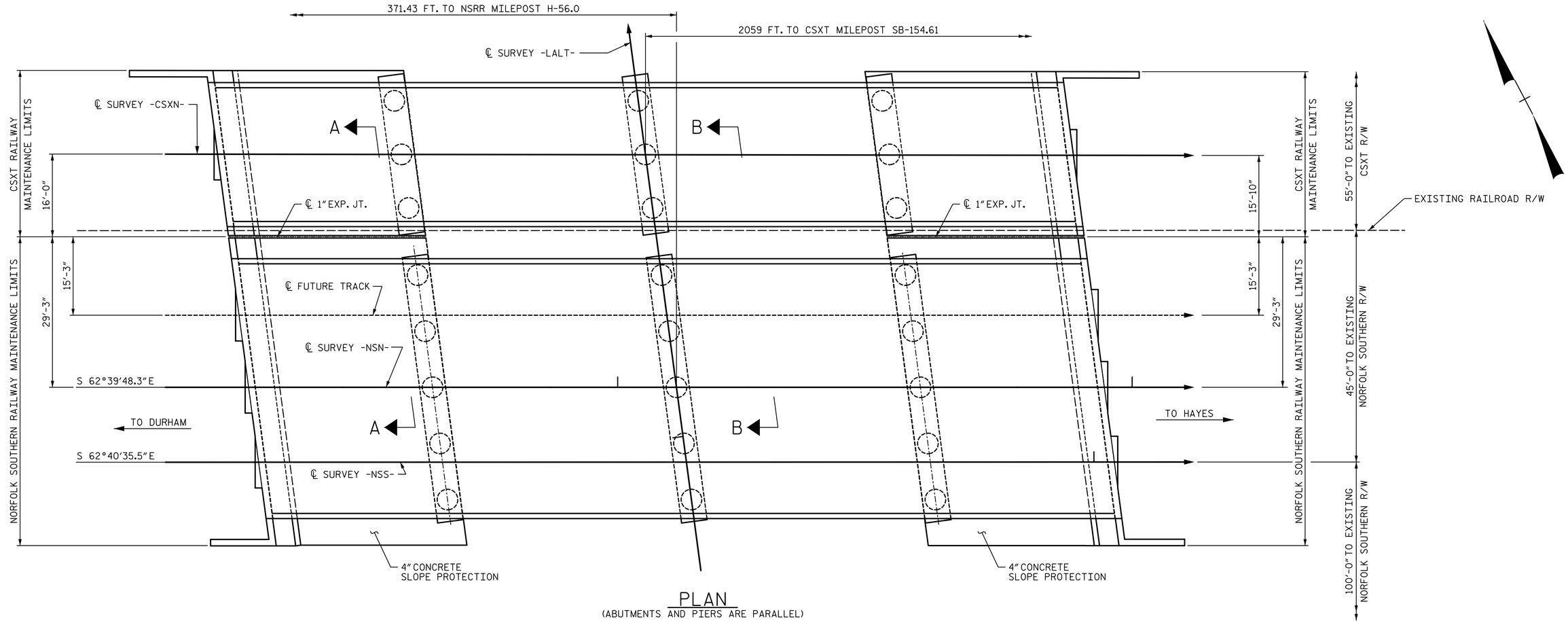

PLAN
(ABUTMENTS AND PIERS ARE PARALLEL)

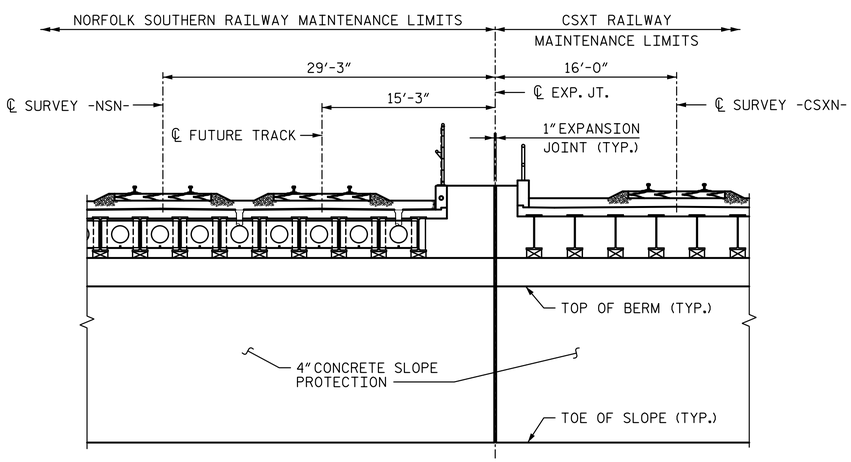

SECTION A-A
SCALE: N.T.S

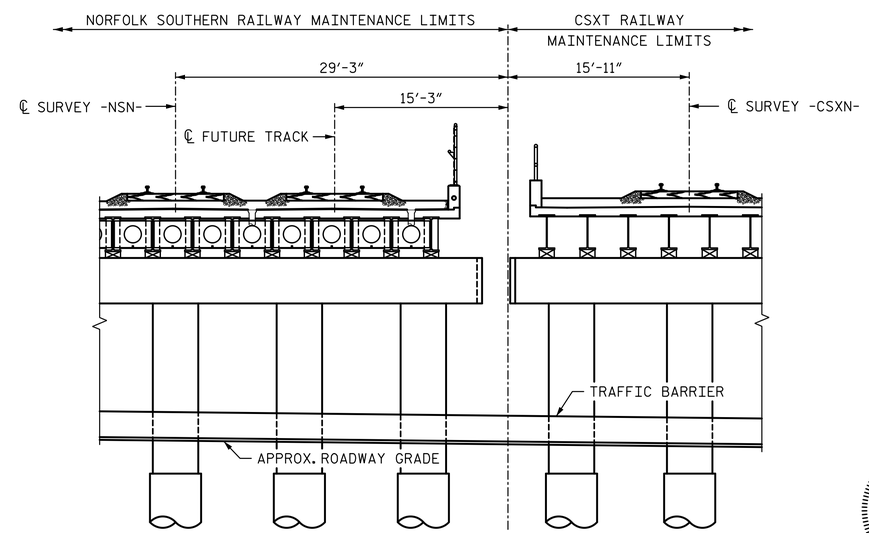

SECTION B-B
SCALE: N.T.S

PROJECT NO. U-3308
DURHAM COUNTY
STATION: POT 24+09.63 -LALT-
POT 21+11.43 -NSN-

STATE OF NORTH CAROLINA
DEPARTMENT OF TRANSPORTATION
RALEIGH

MAINTENANCE LIMITS

DocuSigned by: Paul Kelly Jr. 26ADE85DEC6A498...

NORTH CAROLINA PROFESSIONAL SEAL 19765 ENGINEER PAUL E. KELLY, JR. 3/31/2015

REVISIONS						SHEET NO.
NO.	BY:	DATE:	NO.	BY:	DATE:	S3-4a
1			3			TOTAL SHEETS
2			4			44

DRAWN BY : NMC DATE : 06-14
CHECKED BY : DJM DATE : 06-14

DOCUMENT NOT CONSIDERED FINAL UNLESS ALL SIGNATURES COMPLETED

STV / Ralph Whitehead Associates, Inc.
900 W Trade Street, Suite 715
Charlotte, NC 28202
NC License No. F-0991

RAIL TRAFFIC STAGING:

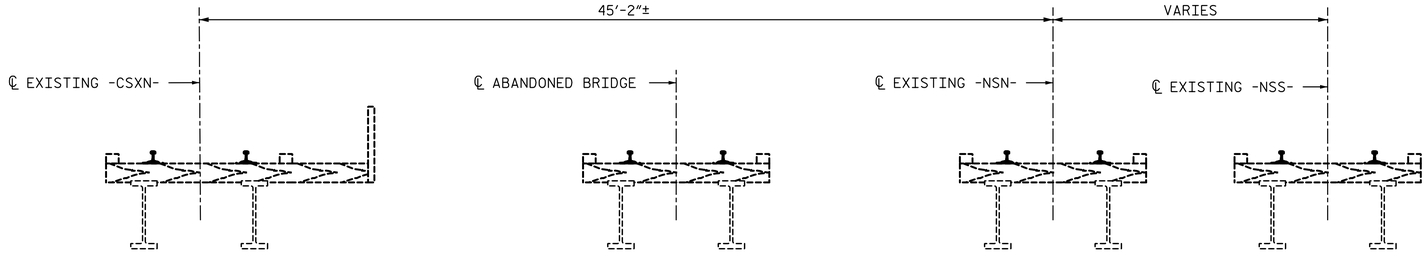

EXISTING

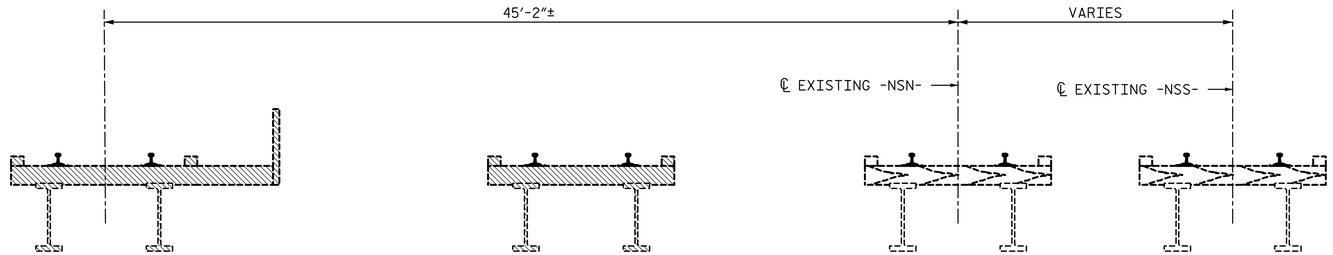

STAGE 1

STAGE 1

REMOVE EXISTING -CSXN- BRIDGE AND EXISTING ABANDONED BRIDGE.

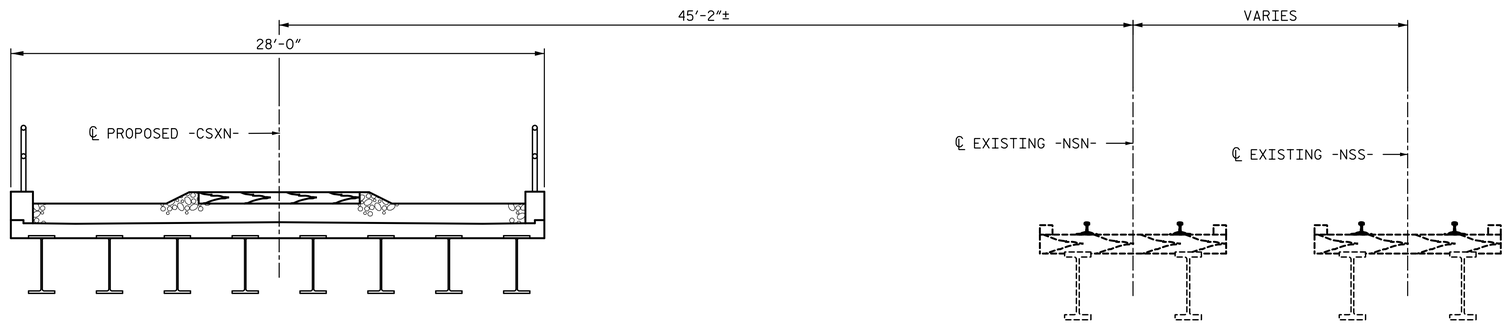

STAGE 2 (SPANS A, B, & D)

STAGE 2 (SPANS A, B, &D)

INSTALL SHORING 1 NEAR EXISTING -NSN- BRIDGE TO FACILITATE CONSTRUCTION OF PROPOSED -CSXN- BRIDGE. SEE TEMPORARY SHORING SHEET 1 OF 5 FOR LOCATION OF SHORING 1.

(ADDITIONAL SHORING MAY BE REQUIRED AT PROPOSED PIER 2 TO PROTECT EXISTING ALSTON AVE. AND FOR PROPOSED -NSN-/-NSS- AND -CSXN- BRIDGE CONSTRUCTION.)

CONSTRUCT PROPOSED -CSXN- BRIDGE SPANS A, B, AND D.

STAGE 2 (SPAN C)

CONSTRUCT PROPOSED TEMPORARY SPAN C OF PROPOSED -CSXN- BRIDGE.

* TEMPORARY MINIMUM VERTICAL CLEARANCE TO EXISTING ALSTON AVE. = 14′-5″

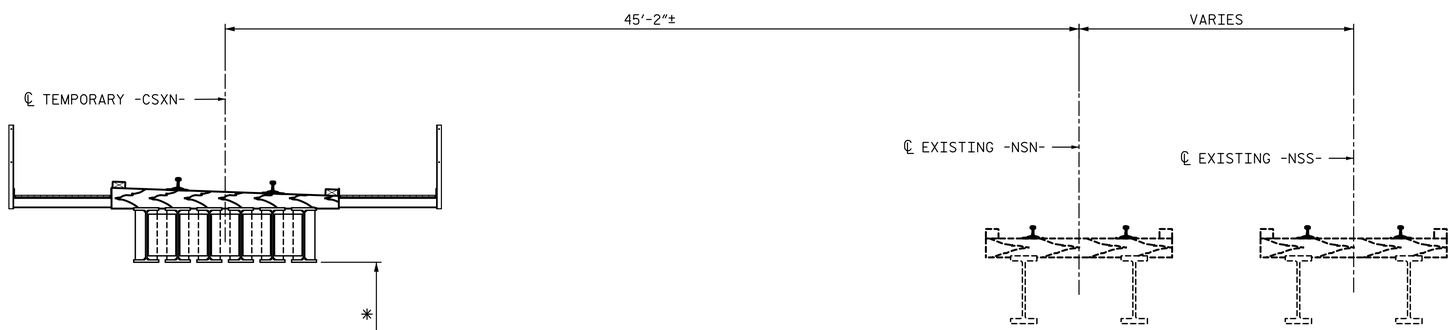

STAGE 2 (SPAN C)

PROJECT NO. U-3308

DURHAM COUNTY

STATION: POT 24+09.63 -LALT-
POT 21+11.43 -NSN-

SHEET 1 OF 2

DocuSigned by: Paul Kelly Jr. 26ADE85DEC6A498...

NORTH CAROLINA PROFESSIONAL SEAL 19765 ENGINEER PAUL E. KELLY, JR.

3/31/2015

STATE OF NORTH CAROLINA
DEPARTMENT OF TRANSPORTATION
RALEIGH

CONSTRUCTION STAGING

REVISIONS							SHEET NO.
NO.	BY:	DATE:	NO.	BY:	DATE:		S3-5
1			3				TOTAL SHEETS
2			4				44

DRAWN BY : NMC DATE : 06-14
CHECKED BY : DJM DATE : 06-14

DOCUMENT NOT CONSIDERED FINAL UNLESS ALL SIGNATURES COMPLETED

STV / Ralph Whitehead Associates, Inc.
900 W Trade Street, Suite 715
Charlotte, NC 28202
NC License No. F-0991

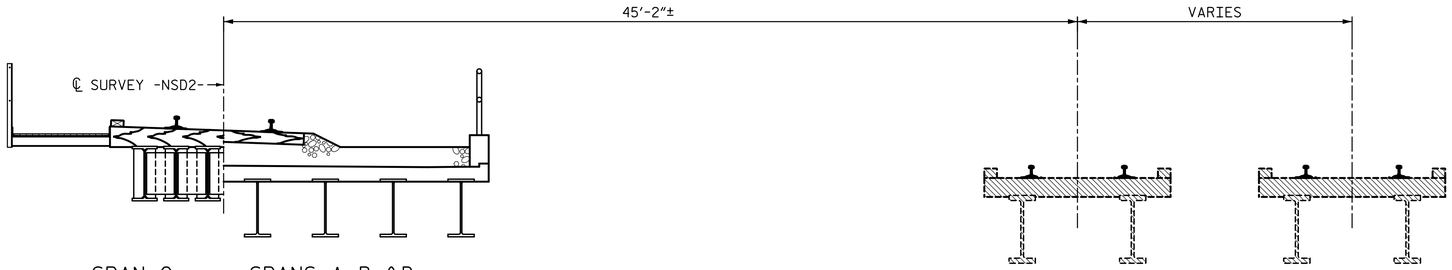

STAGE 3

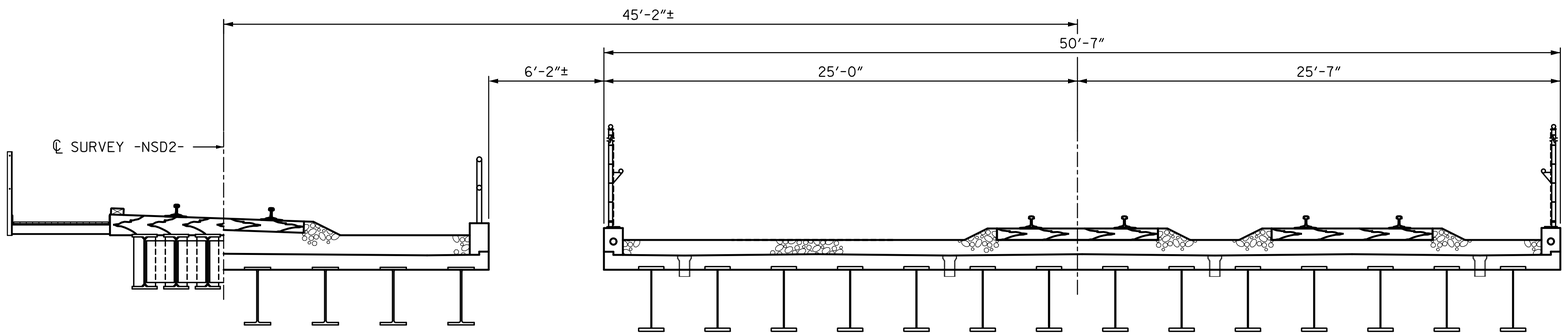

STAGE 4

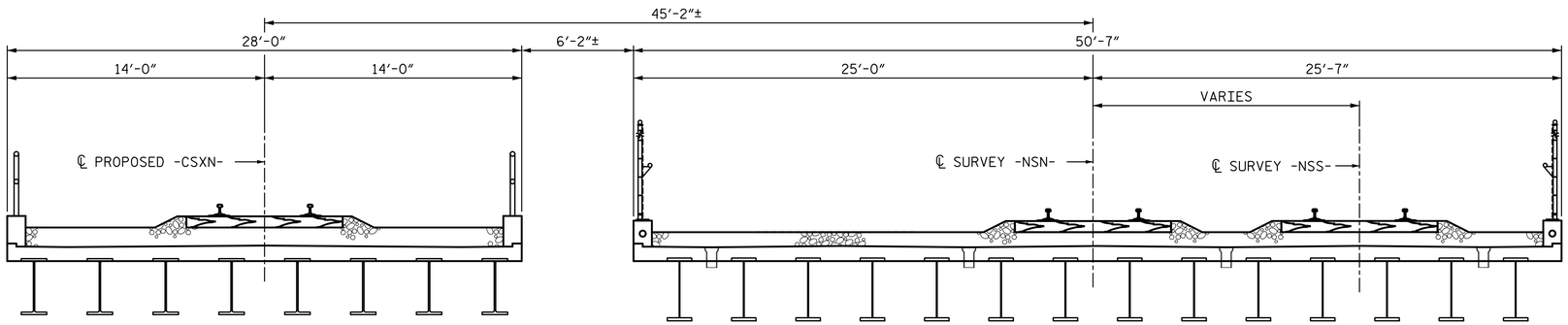

STAGE 5

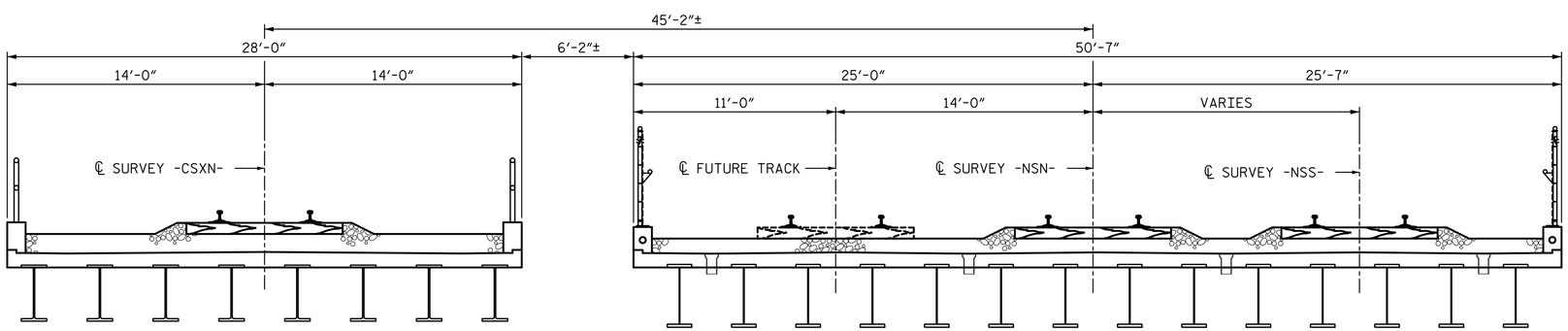

FINAL

RAIL TRAFFIC STAGING CONT'D:

STAGE 3

INSTALL SHORING 2 AND 3 TO MAINTAIN RAIL TRAFFIC ON -NSD2- TRACK. SEE SEE TEMPORARY SHORING SHEET 1 OF 5 FOR LOCATION OF SHORING 2 AND 3.

CONSTRUCT PROPOSED -NSD2- TRACK.

SHIFT ALL RAIL TRAFFIC TO PROPOSED -NSD2- TRACK.

REMOVE EXISTING -NSN- AND -NSS- BRIDGES.

STAGE 4

CONSTRUCT PROPOSED -NSN- AND -NSS- BRIDGE.

STAGE 5

SHIFT ALL RAIL TRAFFIC TO -NSN- AND -NSS- BRIDGE. REMOVE PROPOSED -NSD2- TRACK, AND TEMPORARY SPAN C OF PROPOSED -CSXN- BRIDGE.

COMPLETE CONSTRUCTION OF -CSXN- BRIDGE/TRACK.

FINAL

SHIFT -CSXN- RAIL TRAFFIC TO PROPOSED -CSXN- BRIDGE.

PROJECT NO. U-3308
DURHAM COUNTY
STATION: POT 24+09.63 -LALT-
POT 21+11.43 -NSN-

SHEET 2 OF 2

STATE OF NORTH CAROLINA
DEPARTMENT OF TRANSPORTATION
RALEIGH

CONSTRUCTION STAGING

DocuSigned by: Paul Kelly Jr. 26ADE85DEC6A498...

NORTH CAROLINA PROFESSIONAL SEAL 19765 ENGINEER PAUL E. KELLY, JR.
3/31/2015

REVISIONS								SHEET NO.
NO.	BY:	DATE:	NO.	BY:	DATE:			S3-6
1			3					TOTAL SHEETS
2			4					44

DRAWN BY : NMC DATE : 06-14
CHECKED BY : DJM DATE : 06-14

DOCUMENT NOT CONSIDERED FINAL UNLESS ALL SIGNATURES COMPLETED

STV / Ralph Whitehead Associates, Inc.
900 W Trade Street, Suite 715
Charlotte, NC 28202
NC License No. F-0991

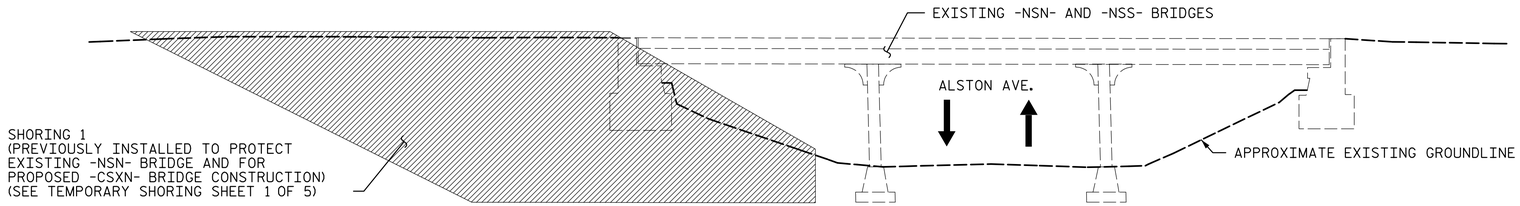

STAGES 1-3

(SECTION ALONG EXISTING -NSN-/-NSS- BRIDGES AFTER CONSTRUCTION OF PROPOSED -CSXN- BRIDGE AND -NSD2- TRACK)

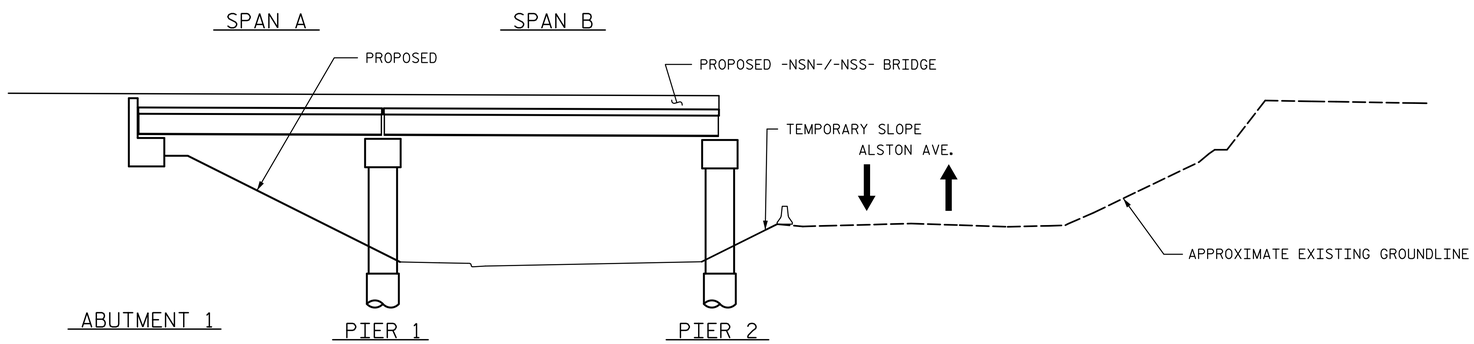

STAGE 4

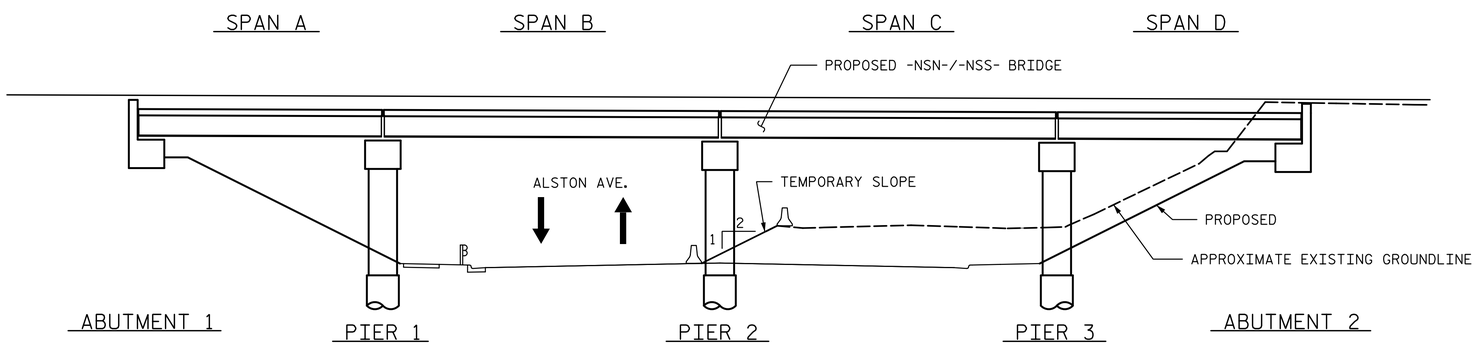

STAGE 5

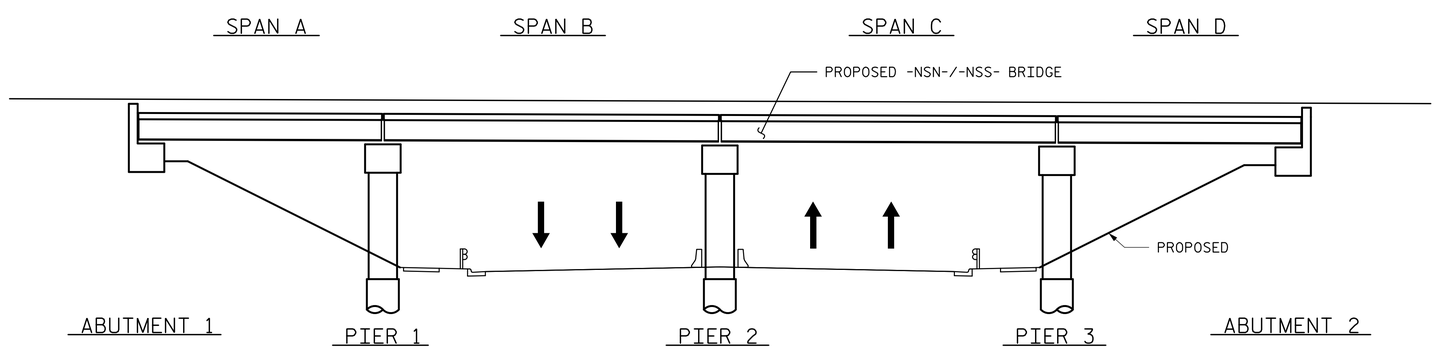

FINAL

TRAFFIC STAGING:

NOTES: SEE RAIL TRAFFIC STAGING ON "CONSTRUCTION STAGING" SHEETS FOR ADDITIONAL INFORMATION.

SEE PLANS FOR BRIDGE ON CSX FOR TRAFFIC STAGING STAGES 1 AND 2.

TRAFFIC STAGING BELOW SHALL BE IN CONJUNCTION WITH TRAFFIC STAGING SHOWN ON PLANS FOR BRIDGE ON CSX.

TEMPORARY SHORING 2 AND 3 TO BE INSTALLED DURING CONSTRUCTION OF -CSXN- BRIDGE.

STAGES 1-3

ALSTON AVE. TRAFFIC TO REMAIN IN EXISTING POSITION.

REMOVE EXISTING -NSN- AND -NSS- BRIDGES.

EXCAVATE ADJACENT TO TEMPORARY SHORING 1 AREA.

REMOVE TEMPORARY SHORING 1.

STAGE 4

CONSTRUCT PROPOSED -NSN-/-NSS- BRIDGE, SPANS A AND B.

STAGE 5

SHIFT ALSTON AVE. TRAFFIC TO CONSTRUCTED ROADWAY UNDER SPAN B AS SHOWN.

EXCAVATE REMAINDER OF EXISTING GROUND.

REMOVE TEMPORARY SHORING 2. (REMOVE ADDITIONAL SHORING AT PIER 2 IF REQUIRED.)

CONSTRUCT SPANS C AND D OF PROPOSED -NSN-/-NSS- BRIDGE. CONSTRUCT REMAINDER OF ROADWAY FOR ALSTON AVE.

REMOVE TEMPORARY SHORING 3.

FINAL

SHIFT ALSTON AVE. TRAFFIC TO FINAL POSITIONS.

PROJECT NO. U-3308

DURHAM COUNTY

STATION: POT 24+09.63 -LALT-
POT 21+11.43 -NSN-

DocuSigned by: Paul Kelly Jr
26ADE85DEC6A498...

NORTH CAROLINA PROFESSIONAL SEAL 19765 ENGINEER PAUL E. KELLY, JR.

3/31/2015

STATE OF NORTH CAROLINA
DEPARTMENT OF TRANSPORTATION
RALEIGH

TRAFFIC STAGING

REVISIONS								SHEET NO.
NO.	BY:	DATE:	NO.	BY:	DATE:			S3-7
1			3					TOTAL SHEETS
2			4					44

STV / Ralph Whitehead Associates, Inc.
900 W Trade Street, Suite 715
Charlotte, NC 28202
NC License No. F-0991

DOCUMENT NOT CONSIDERED FINAL UNLESS ALL SIGNATURES COMPLETED

DRAWN BY : NMC DATE : 06-14
CHECKED BY : DJM DATE : 06-14

NOTES:

1. ALL REINFORCING STEEL IN DECK AND CURBS SHALL BE EPOXY COATED.
2. THIS STRUCTURE IS DESIGNED FOR TOTAL DEAD LOAD TO INCLUDE 6"FUTURE BALLAST.

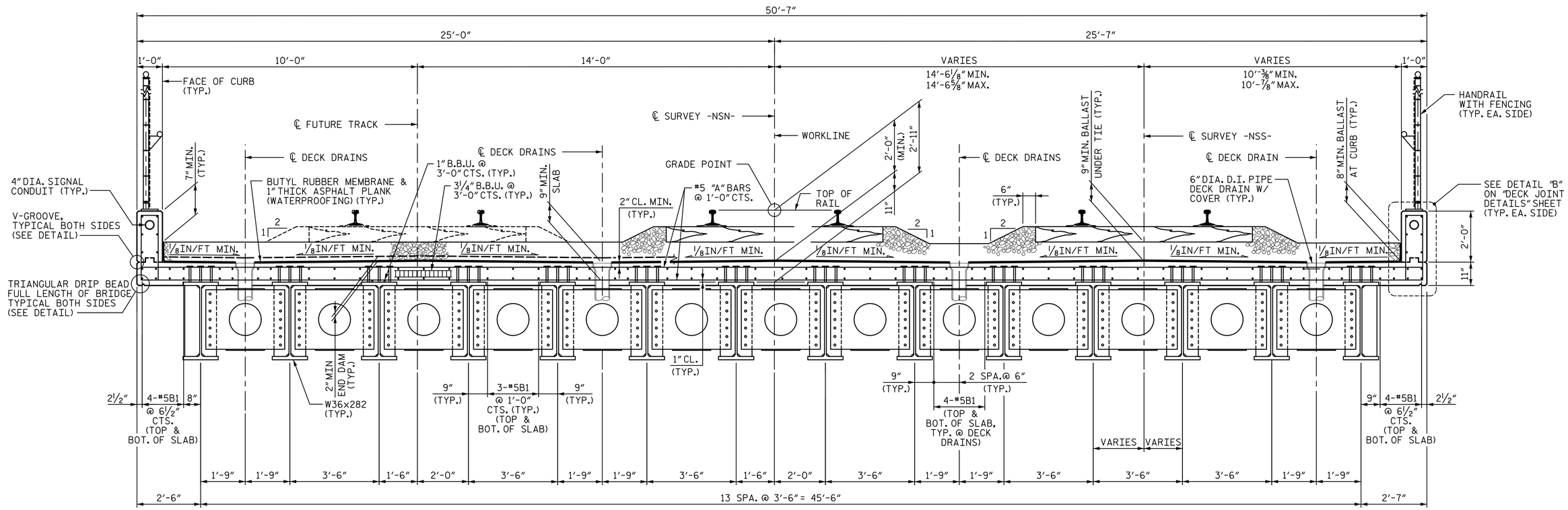

TYPICAL SECTION

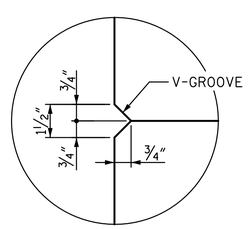

V-GROOVE DETAIL

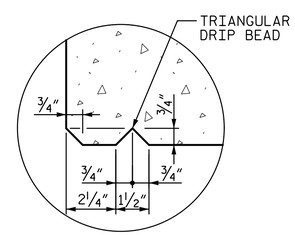

TRIANGULAR DRIP BEAD DETAIL

PROJECT NO. U-3308

DURHAM COUNTY

STATION: POT 24+09.63 -LALT-
POT 21+11.43 -NSN-

DocuSigned by: Paul Kelly Jr. 26ADE65DEC6A498...

NORTH CAROLINA PROFESSIONAL SEAL 19765 ENGINEER PAUL E. KELLY, JR.

3/31/2015

STATE OF NORTH CAROLINA
DEPARTMENT OF TRANSPORTATION
RALEIGH

TYPICAL SECTION

REVISIONS							SHEET NO.
NO.	BY:	DATE:	NO.	BY:	DATE:		S3-8
1			3				TOTAL SHEETS
2			4				44

DRAWN BY : MTC DATE : 06-14
CHECKED BY : DJM DATE : 06-14

DOCUMENT NOT CONSIDERED FINAL UNLESS ALL SIGNATURES COMPLETED

STV / Ralph Whitehead Associates, Inc.
900 W Trade Street, Suite 715
Charlotte, NC 28202
NC License No. F-0991

alveyac 3/30/2015 1:40:11 PM I:\PROJ\251325\ustation\struct\Final\403_008_U3308_SMU_TS01.dgn

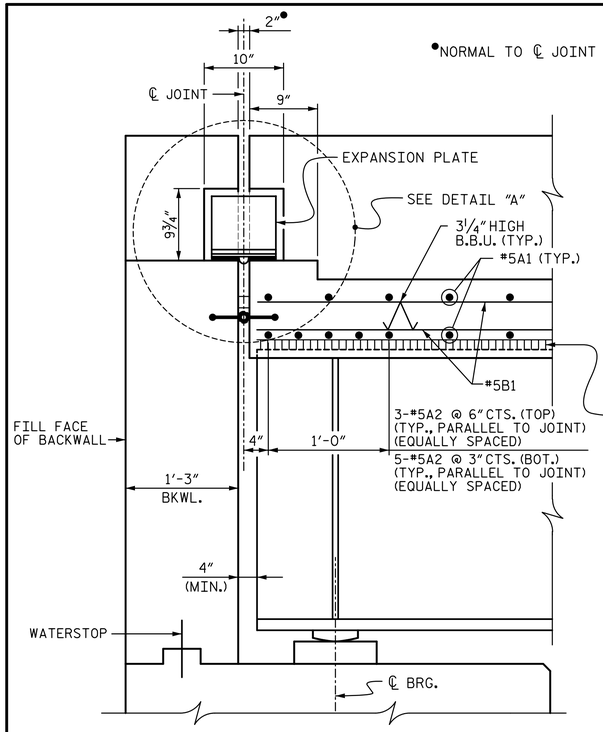

SECTION A-A
N.T.S.

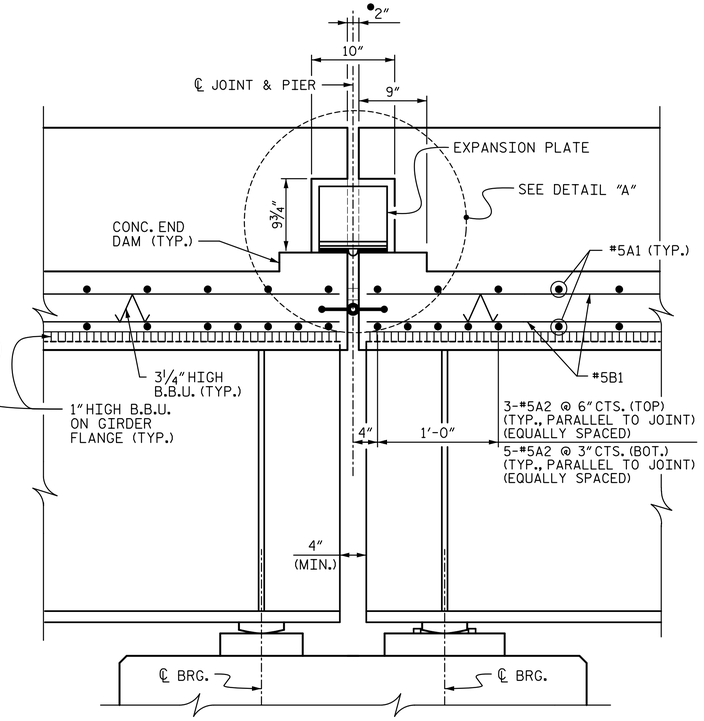

SECTION B-B
N.T.S.
(PIER 2 AND 3 SHOWN, PIER 1 SIMILAR)

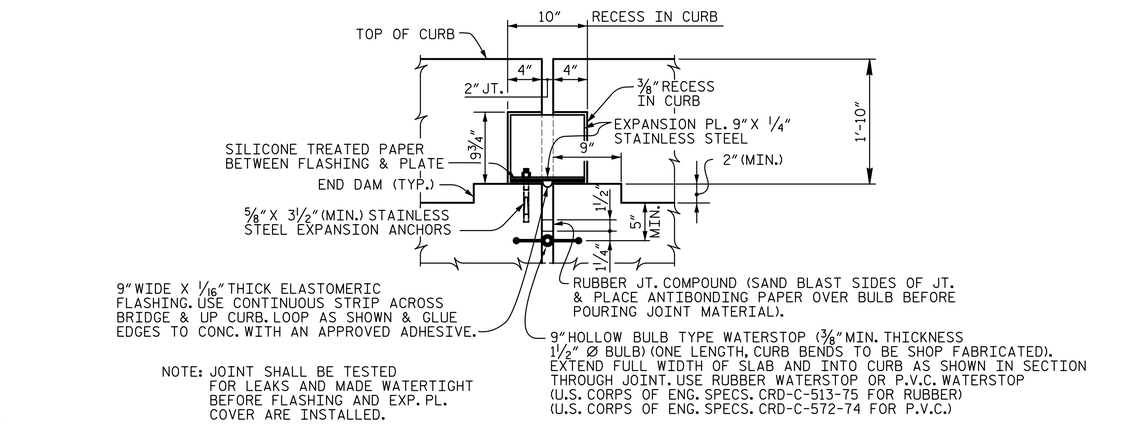

NOTE: JOINT SHALL BE TESTED FOR LEAKS AND MADE WATERTIGHT BEFORE FLASHING AND EXP. PL. COVER ARE INSTALLED.

DETAIL "A"
N.T.S.

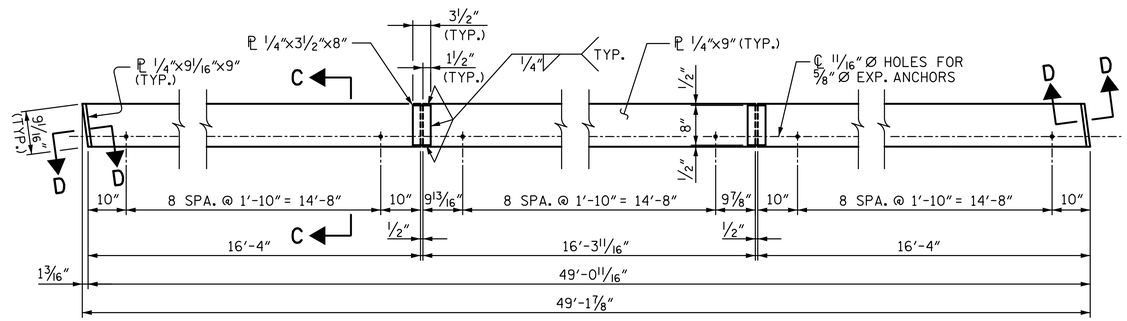

EXPANSION PLATE ASSEMBLY

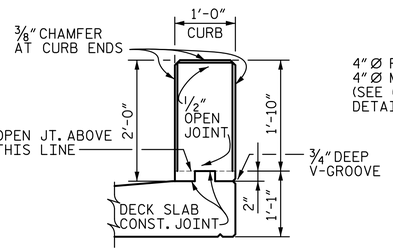

SECTION THRU OPEN JOINTS IN CURB
N.T.S.

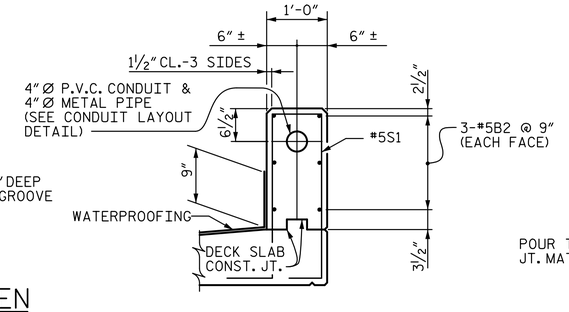

DETAIL "B"
N.T.S.

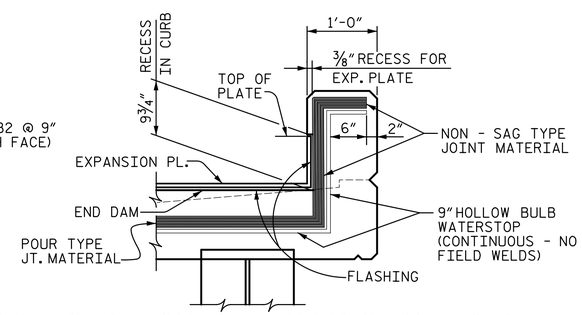

PART SECTION AT EXPANSION JOINT
N.T.S.

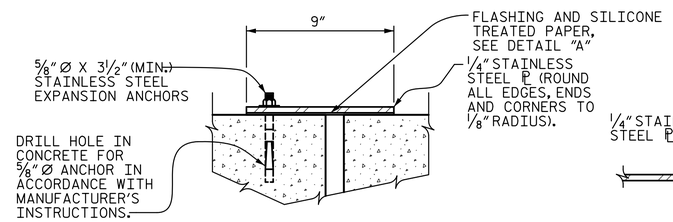

NOTE: STAINLESS STEEL EXP. ANCHOR: ASTM A276, TYPE 302, COND. B
STAINLESS STEEL ℙ: ASTM A666, TYPE 304

SECTION C-C
N.T.S.

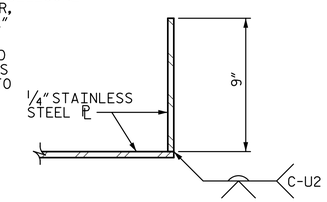

SECTION D-D
N.T.S.

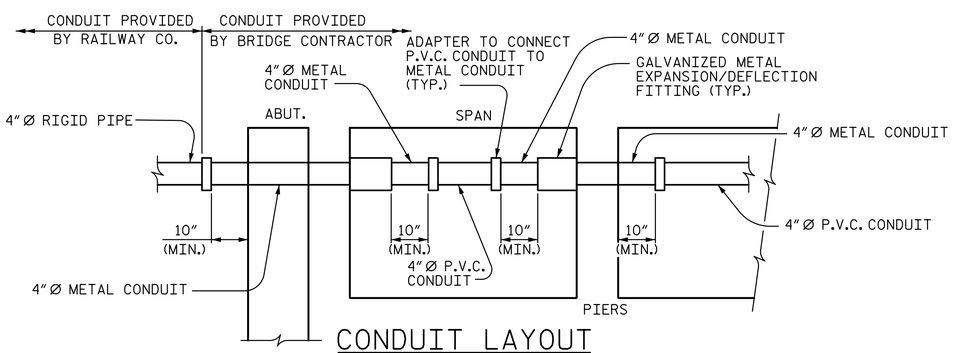

CONDUIT LAYOUT
N.T.S.

NOTES FOR CONDUIT:

1. CONDUIT TO BE 4" Ø P.V.C. CONDUIT IN ACCORDANCE WITH UNDERWRITER'S LABORATORY SPECIFICATIONS.
2. PROVISIONS SHALL BE MADE FOR EXPANSION BETWEEN DECK SLABS AT EXPANSION JOINTS AT BENTS. (METAL EXPANSION/DEFLECTION FITTINGS).
3. COUPLING SHALL BE PROVIDED BEHIND BACKWALL OF ABUTMENTS FOR CONNECTION TO 4" Ø RIGID PIPE.
4. FOR CONDUIT IN PARAPETS, SEE SPECIAL PROVISIONS.

NOTES:

1. FOR WATERPROOFING AT EXPANSION JOINTS, SEE "WATERPROOFING" SPECIAL PROVISION.
2. THE COST OF EXPANSION JOINT ASSEMBLY, STAINLESS STEEL EXPANSION ANCHORS, SILICONE TREATED PAPER AND ALL LABOR, MATERIALS AND INCIDENTALS REQUIRED FOR INSTALLATION SHALL BE INCLUDED IN THE UNIT CONTRACT PRICE BID FOR "REINFORCED CONCRETE DECK SLAB".

DocuSigned by: Paul Kelly Jr. 26ADE85DEC6A498...
3/31/2015

NORTH CAROLINA PROFESSIONAL SEAL 19765 ENGINEER PAUL E. KELLY, JR.

PROJECT NO. U-3308
DURHAM COUNTY
STATION: POT 24+09.63 -LALT-
POT 21+11.43 -NSN-

STATE OF NORTH CAROLINA
DEPARTMENT OF TRANSPORTATION
RALEIGH

DECK JOINT DETAILS

REVISIONS								
NO.	BY:	DATE:	NO.	BY:	DATE:			
1			3					
2			4					

SHEET NO. S3-9
TOTAL SHEETS 44

DRAWN BY : JAB DATE : 06-14
CHECKED BY : DJM DATE : 06-14

DOCUMENT NOT CONSIDERED FINAL UNLESS ALL SIGNATURES COMPLETED

STV / Ralph Whitehead Associates, Inc.
900 W Trade Street, Suite 715
Charlotte, NC 28202
NC License No. F-0991

NOTES:

1. FOR OPEN JOINT IN CURB DETAILS, SEE "DECK JOINT DETAILS" SHEET.
2. FOR DECK DRAIN LOCATIONS, SEE "STRUCTURE DRAINAGE SYSTEM" SHEET.
3. FOR SECTION A-A AND B-B, SEE "DECK JOINT DETAILS" SHEET.

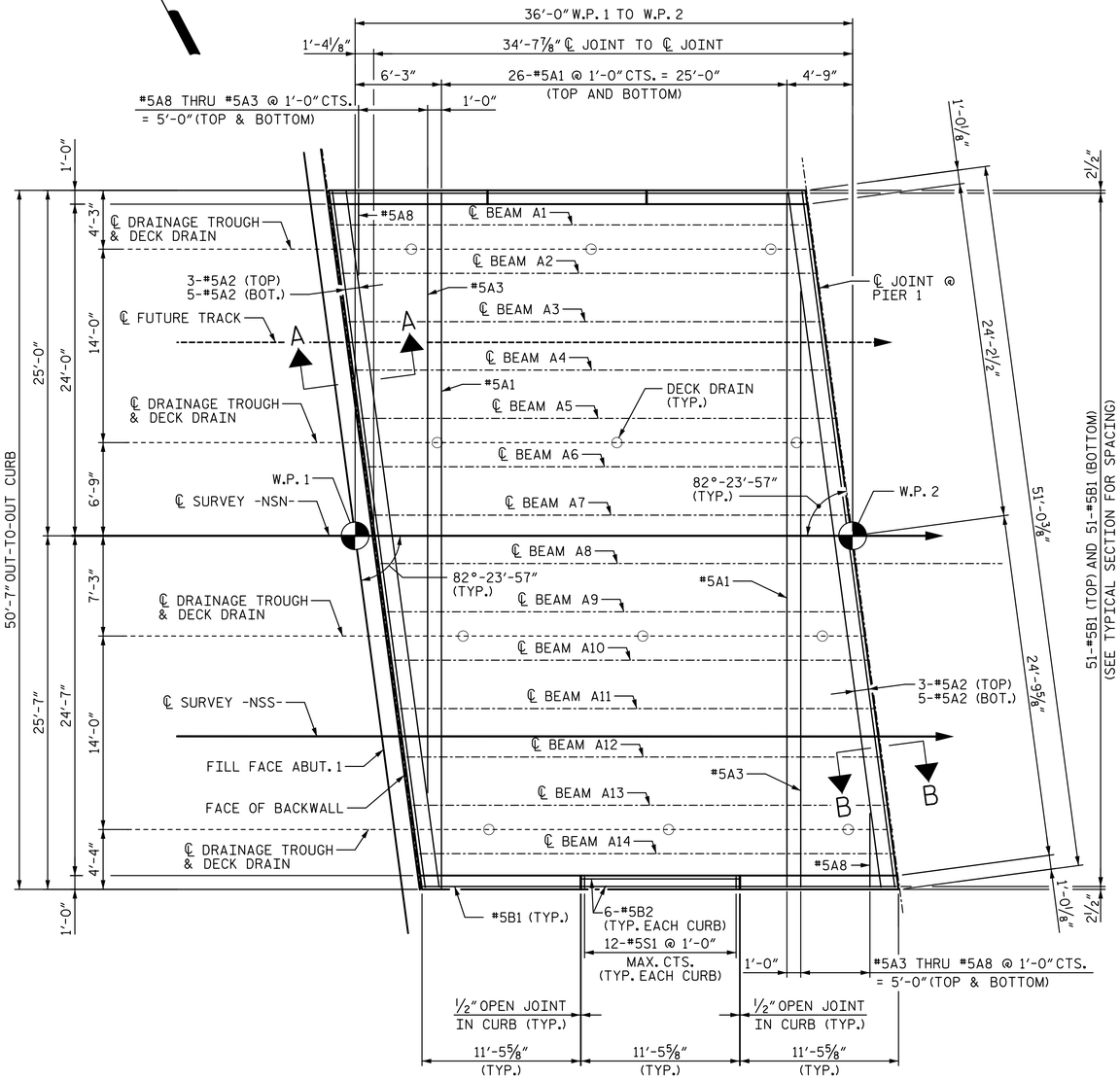

PLAN - SPAN A

(ABUTMENTS AND PIERS ARE PARALLEL)

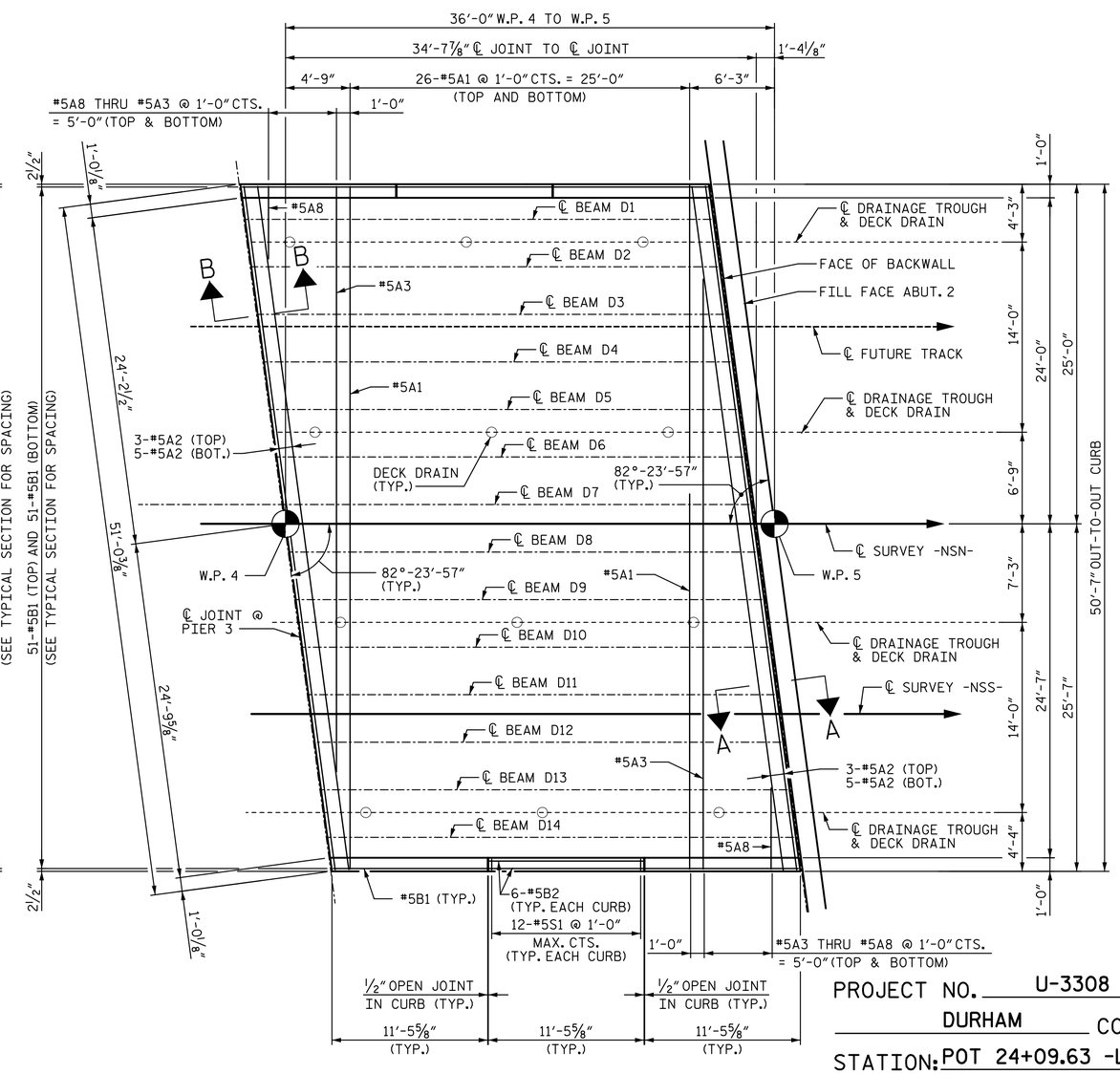

PLAN - SPAN D

(ABUTMENTS AND PIERS ARE PARALLEL)

PROJECT NO. U-3308

DURHAM COUNTY

STATION: POT 24+09.63 -LALT-
POT 21+11.43 -NSN-

SHEET 1 OF 3

STATE OF NORTH CAROLINA
DEPARTMENT OF TRANSPORTATION
RALEIGH

PLAN OF SPAN
SPANS A & D

DocuSigned by: Paul Kelly Jr. 26ADE85DEC6A498...

3/31/2015

NORTH CAROLINA PROFESSIONAL SEAL 19765 ENGINEER PAUL E. KELLY, JR.

DRAWN BY : MTC DATE : 06-14
CHECKED BY : DJM DATE : 06-14

DOCUMENT NOT CONSIDERED FINAL UNLESS ALL SIGNATURES COMPLETED

STV / Ralph Whitehead Associates, Inc.
900 W Trade Street, Suite 715
Charlotte, NC 28202
NC License No. F-0991

REVISIONS						SHEET NO.
NO.	BY:	DATE:	NO.	BY:	DATE:	S3-10
1			3			TOTAL SHEETS
2			4			44

NOTES:

1. FOR OPEN JOINT IN CURB DETAILS, SEE "DECK JOINT DETAILS" SHEET.
2. FOR DECK DRAIN LOCATIONS, SEE "STRUCTURE DRAINAGE SYSTEM" SHEET.
3. FOR SECTION B-B, SEE "DECK JOINT DETAILS" SHEET.

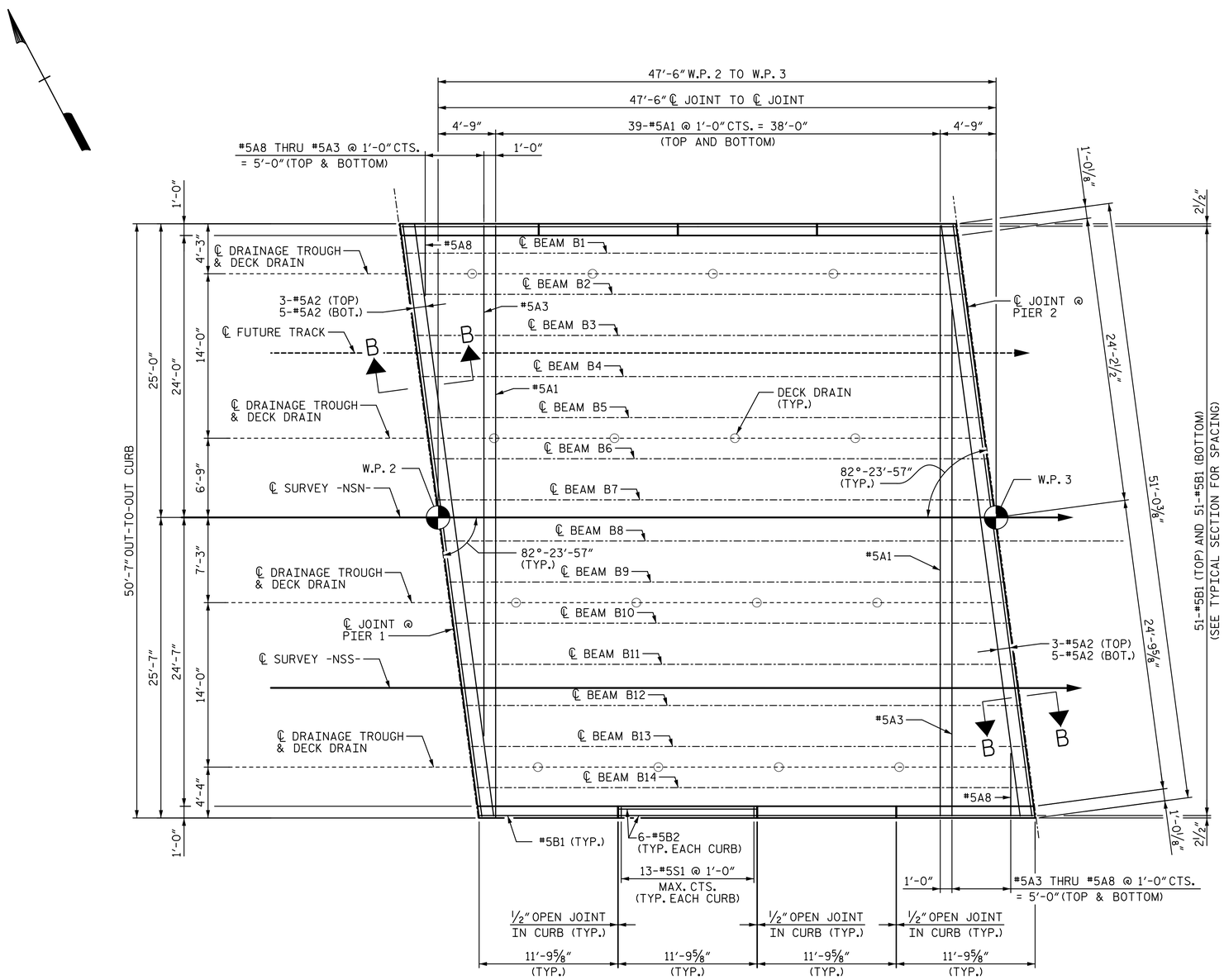

PLAN - SPAN B

(ABUTMENTS AND PIERS ARE PARALLEL)

PROJECT NO. U-3308

DURHAM COUNTY

STATION: POT 24+09.63 -LALT-
POT 21+11.43 -NSN-

SHEET 2 OF 3

STATE OF NORTH CAROLINA
DEPARTMENT OF TRANSPORTATION
RALEIGH

PLAN OF SPANS
SPAN B

DocuSigned by: Paul Kelly Jr. 26ADE85DEC6A498...

NORTH CAROLINA PROFESSIONAL SEAL 19765 ENGINEER PAUL E. KELLY, JR.

3/31/2015

REVISIONS							SHEET NO.
NO.	BY:	DATE:	NO.	BY:	DATE:		S3-11
1			3				TOTAL SHEETS
2			4				44

STV / Ralph Whitehead Associates, Inc.
900 W Trade Street, Suite 715
Charlotte, NC 28202
NC License No. F-0991

DOCUMENT NOT CONSIDERED FINAL UNLESS ALL SIGNATURES COMPLETED

DRAWN BY : MTC DATE : 06-14
CHECKED BY : DJM DATE : 06-14

alveyac 3/30/2015 1:40:13 PM I:\PROJ\25325\ustation\struct\Final\403_OIL_U3308_SMU_POS02.dgn

NOTES:

1. FOR OPEN JOINT IN CURB DETAILS, SEE "DECK JOINT DETAILS" SHEET.
2. FOR DECK DRAIN LOCATIONS, SEE "STRUCTURE DRAINAGE SYSTEM" SHEET.
3. FOR SECTION B-B, SEE "DECK JOINT DETAILS" SHEET.

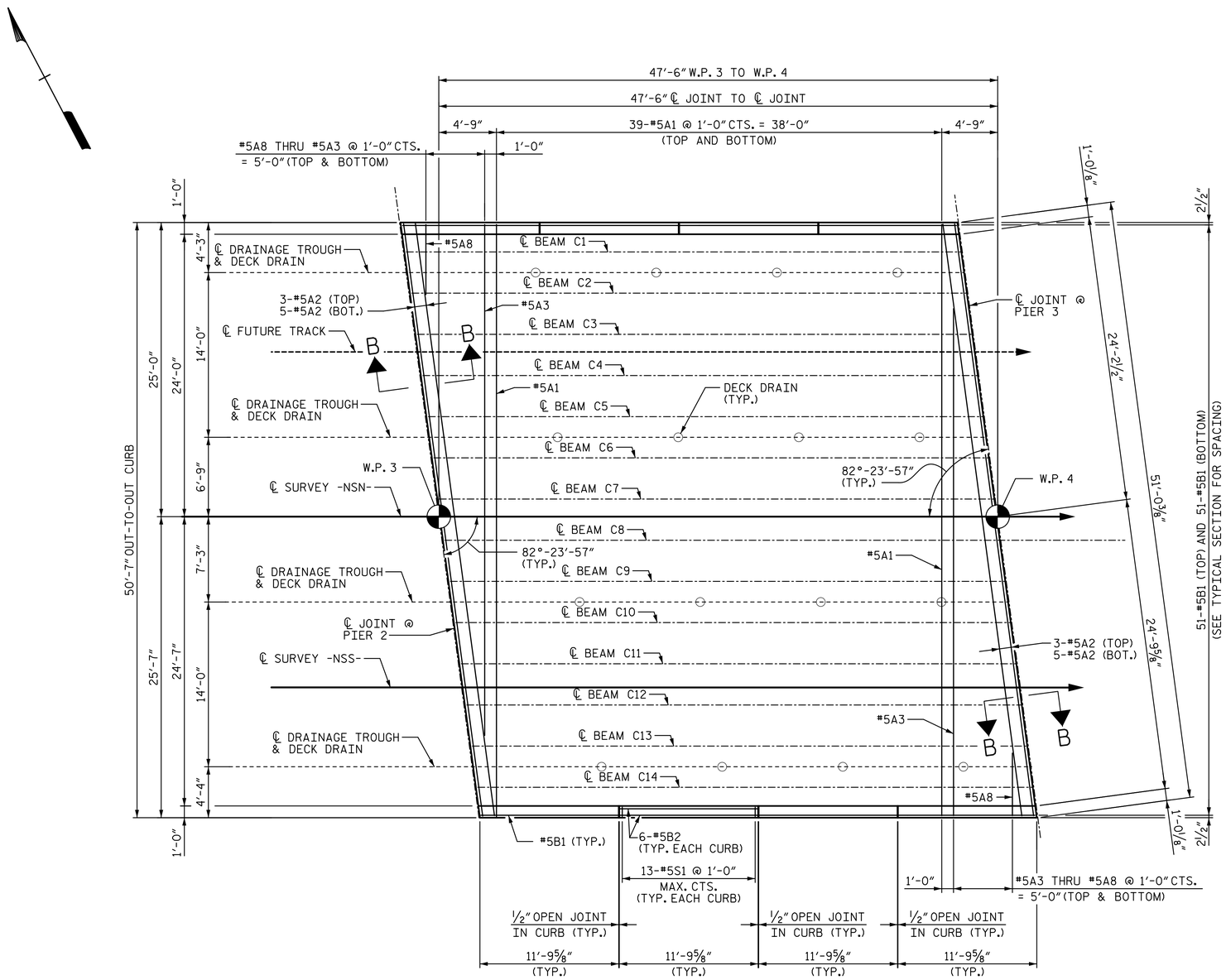

PLAN - SPAN C

(ABUTMENTS AND PIERS ARE PARALLEL)

PROJECT NO. U-3308

DURHAM COUNTY

STATION: POT 24+09.63 -LALT-
POT 21+11.43 -NSN-

SHEET 3 OF 3

STATE OF NORTH CAROLINA
DEPARTMENT OF TRANSPORTATION
RALEIGH

PLAN OF SPAN
SPAN C

DocuSigned by: Paul Kelly Jr
26ADE85DEC6A498...

NORTH CAROLINA PROFESSIONAL SEAL 19765 ENGINEER PAUL E. KELLY, JR.

3/31/2015

REVISIONS							SHEET NO.
NO.	BY:	DATE:	NO.	BY:	DATE:		S3-12
1			3				TOTAL SHEETS
2			4				44

DOCUMENT NOT CONSIDERED FINAL UNLESS ALL SIGNATURES COMPLETED

STV / Ralph Whitehead Associates, Inc.
900 W Trade Street, Suite 715
Charlotte, NC 28202
NC License No. F-0991

DRAWN BY : MTC DATE : 06-14
CHECKED BY : DJM DATE : 06-14

alveyac 3/30/2015 1:40:13 PM I:\PROJ\251325\ustation\struct\Final\403_012_U3308_SMU_POS03.dgn

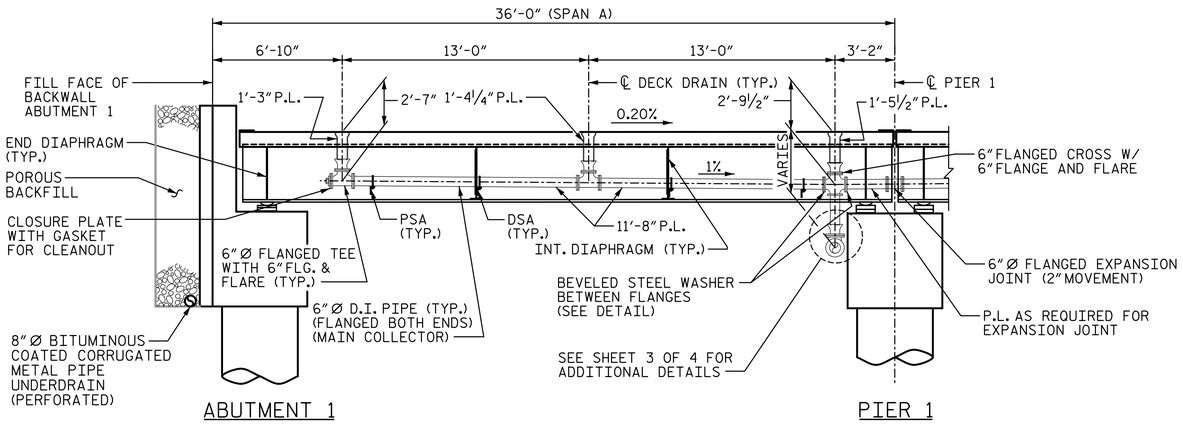

ELEVATION - SPAN A

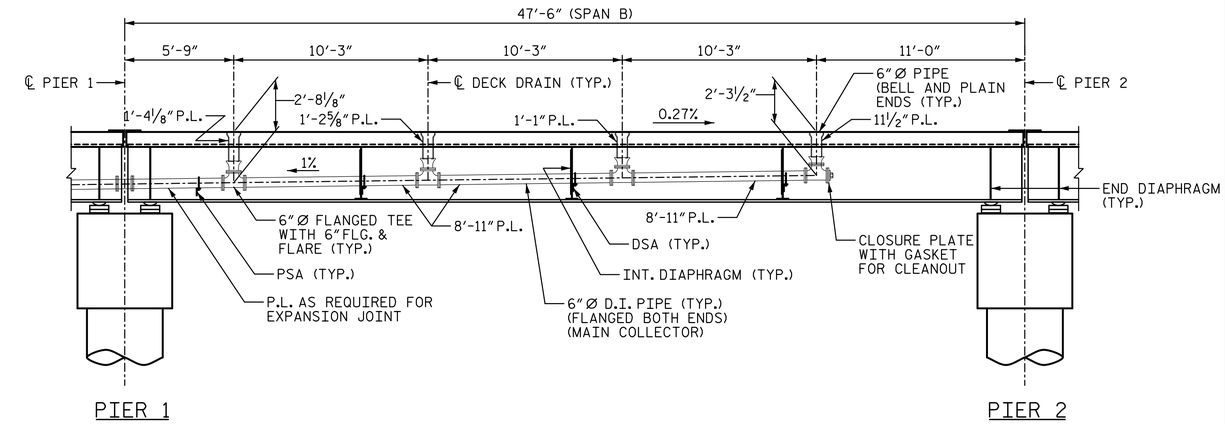

ELEVATION - SPAN B

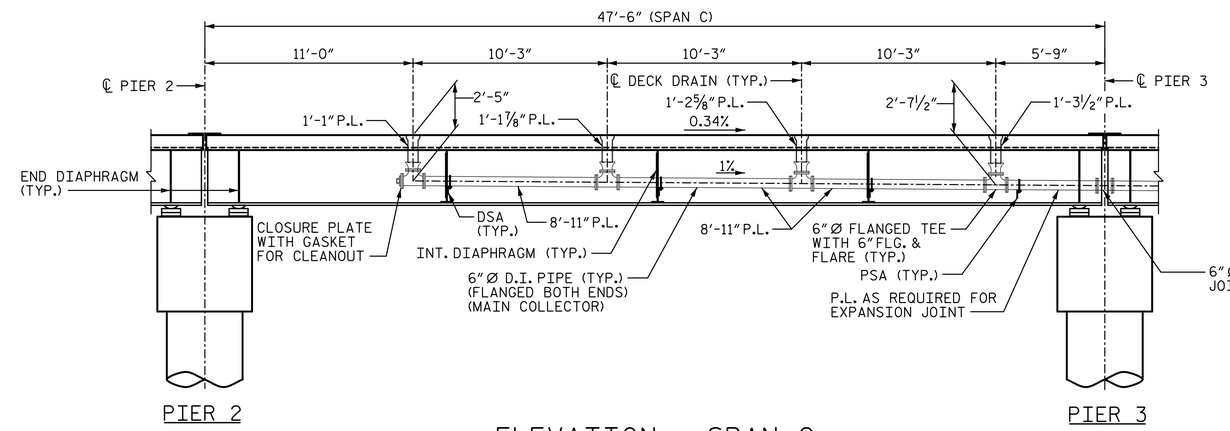

ELEVATION - SPAN C

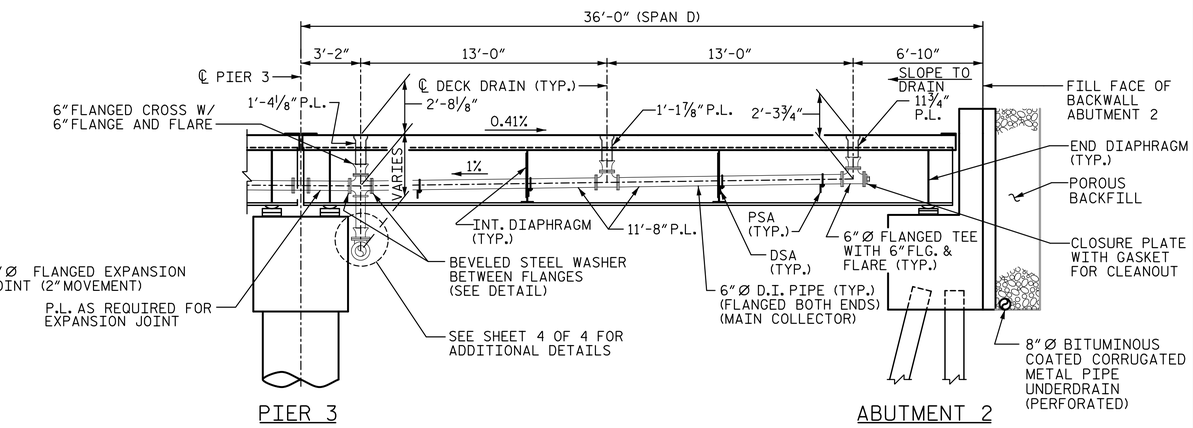

ELEVATION - SPAN D

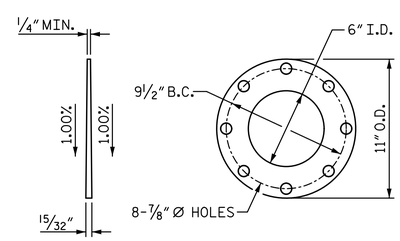

BEVELED STEEL WASHER DETAIL

(FOR 6" I.D. FLANGED PIPE)

NOTES:

1. FOR DECK DRAIN DETAIL, SEE SHEET 2 OF 4.
2. FOR DIAPHRAGM SUPPORT ANGLE (DSA) DETAILS, SEE SHEET 2 OF 4.
3. FOR PIPE SUPPORT ANGLE (PSA) DETAILS, SEE SHEET 2 OF 4 AND "STRUCTURAL STEEL DETAILS" SHEETS.
4. FOR ADDITIONAL NOTES, SEE SHEET 2 OF 4.

PROJECT NO. U-3308

DURHAM COUNTY

STATION: POT 24+09.63 -LALT-
POT 21+11.43 -NSN-

SHEET 1 OF 4

STATE OF NORTH CAROLINA
DEPARTMENT OF TRANSPORTATION
RALEIGH

STRUCTURE DRAINAGE SYSTEM

DocuSigned by: Paul Kelly Jr. 26ADE85DEC6A498...

NORTH CAROLINA PROFESSIONAL SEAL 19765 ENGINEER PAUL E. KELLY, JR.

3/31/2015

REVISIONS						SHEET NO.
NO.	BY:	DATE:	NO.	BY:	DATE:	S3-13
1			3			TOTAL SHEETS
2			4			44

DOCUMENT NOT CONSIDERED FINAL UNLESS ALL SIGNATURES COMPLETED

STV / Ralph Whitehead Associates, Inc.
900 W Trade Street, Suite 715
Charlotte, NC 28202
NC License No. F-0991

DRAWN BY : MTC DATE : 06-14
CHECKED BY : DJM DATE : 06-14

alveyac 3/30/2015 1:40:14 PM I:\PROJ\25325\ustation\struct\Final\403_03_U3308_SMU_SD501.dgn

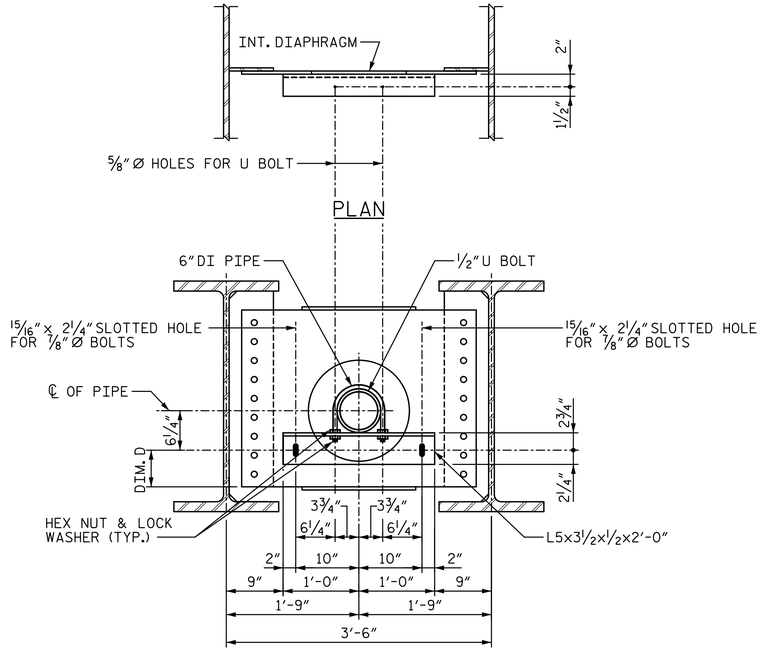

ELEVATION
INTERMEDIATE DIAPHRAGM

DIAPHRAGM SUPPORT ANGLE (DSA)

FOR DIM. D AND ADDITIONAL DETAILS, SEE "STRUCTURAL STEEL DETAILS" SHEET.

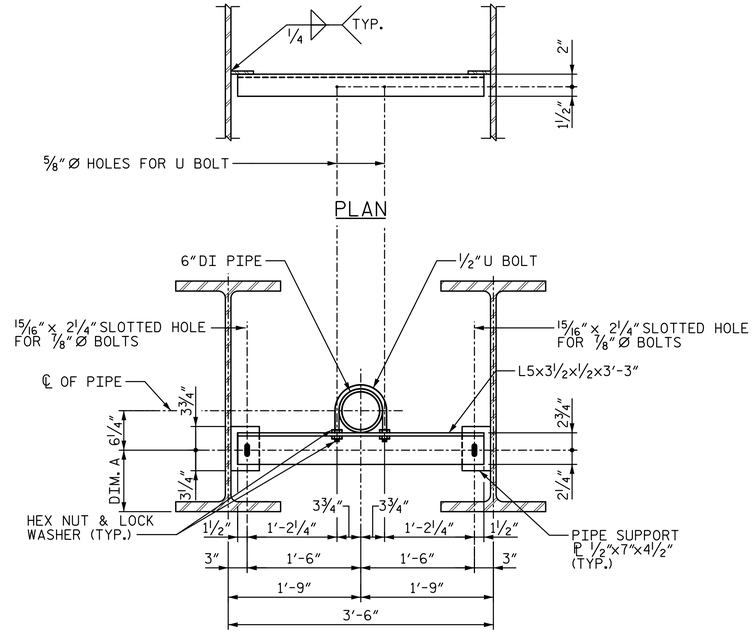

ELEVATION

PIPE SUPPORT ANGLE (PSA)

PSA	DIM. A
A1	10"
A2	7¾"
B1	8¾"
C1	9⅝"
D1	9¼"
D2	1'-1¼"

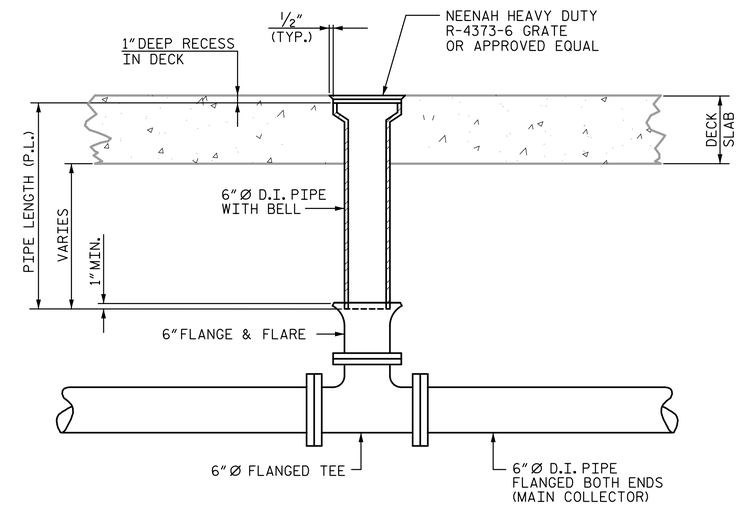

DECK DRAIN DETAIL

STRUCTURAL DRAINAGE SYSTEM ESTIMATED QUANTITIES

DESCRIPTION	UNIT	QTY.
NEENAH R-4373-6 GRATE	EACH	56
6" I.D. BEVELED STEEL WASHER	EACH	8
6" FLANGED TEE	EACH	48
6" FLANGE AND FLARE	EACH	56
6" FLANGED CROSS	EACH	8
6" DIA. FLANGED EXPANSION JOINT (2" MOVEMENT)	EACH	8
6" DIA. CLOSURE PLATE WITH GASKET FOR CLEANOUT	EACH	16
6" DIA. D.I. PIPE FLANGED BOTH ENDS (P.L. AS REQUIRED)	EACH	24
6" DIA. D.I. PIPE FLANGED BOTH ENDS	FT	400'-8"
6" DIA. D.I. PIPE BELL AND PLAIN END	FT	67'-7"
6" DIA. D.I. PIPE FLANGED AND PLAIN END	FT	20'-0"
8" I.D. BEVELED STEEL WASHER	EACH	4
8" FLANGED TEE	EACH	8
8" FLANGE AND FLARE	EACH	8
8" 45° FLANGED ELBOW	EACH	8
8" CLOSURE PLATE WITH GASKET FOR CLEANOUT	EACH	4
8" DIA. D.I. PIPE FLANGED BOTH ENDS	FT	82'-6"
8" DIA. D.I. PIPE FLANGE AND PLAIN END	FT	2'-0"
8" I.D. W/8" OFFSET PIPE CLAMPS	EACH	26
8" I.D. W/6" OFFSET PIPE CLAMPS	EACH	6
DIAPHRAGM SUPPORT ANGLES (DSA)*	EACH	40
PIPE SUPPORT ANGLES (PSA)*	EACH	24

*INCLUDES U-BOLTS, ANGLES, NUTS, BOLTS, WASHERS AND PLATES.

NOTES:

1. ALL PIPE, TEES, BELLS AND BENDS SHALL BE CLASS 54 DUCTILE IRON.
2. ALL BENDS TO BE SHORT RADIUS, INCLUDING FLANGE & FLARE BENDS.
3. LAYOUT IS BASED ON DIMENSIONS GIVEN IN THE PIPE MANUAL OF THE US PIPE AND FOUNDRY COMPANY.
4. FOR LOCATIONS AND DESIGNATIONS OF DSA & PSA, SEE "FRAMING PLAN AND GIRDER DETAILS" SHEETS.
5. PIPE LENGTHS SHOWN DO NOT ALLOW FOR ⅛" THICK GASKETS TO BE USED AT ALL BOLTED FLANGE CONNECTIONS.
6. MAKE FINAL PIPE ALIGNMENT AND TIGHTEN U-BOLTS AFTER RAILROAD TRACK HAS BEEN LAID ACROSS THE BRIDGE.
7. SUPPORT ANGLES AND U-BOLTS ARE INCLUDED IN STRUCTURAL STEEL QUANTITIES.
8. OUTSIDE COATING FOR D.I. PIPE SHALL BE A SHOP PRIME COAT OF INORGANIC ZINC PRIMER AND A FINISH (FIELD) COATING OF VINYL PAINT AS SPECIFIED FOR STRUCTURAL STEEL.
9. SEE SHEETS 3 OF 4 AND 4 OF 4 FOR ADDITIONAL DETAILS.
10. U-BOLTS AND H.S. BOLTS SHALL BE MECHANICALLY GALVANIZED.
11. FOR STRUCTURE DRAINAGE SYSTEM, SEE SPECIAL PROVISIONS.
12. ALL PIPE DIMENSIONS ARE SUBJECT TO ADJUSTMENT TO FIT MEASUREMENTS TAKEN AFTER THE DECKS HAVE BEEN POURED.

DocuSigned by: Paul Kelly Jr. 26ADE85DEC6A498...

NORTH CAROLINA PROFESSIONAL SEAL 19765 ENGINEER PAUL E. KELLY, JR. 3/31/2015

PROJECT NO. U-3308
DURHAM COUNTY
STATION: POT 24+09.63 -LALT-
POT 21+11.43 -NSN-

SHEET 2 OF 4

STATE OF NORTH CAROLINA
DEPARTMENT OF TRANSPORTATION
RALEIGH

STRUCTURE DRAINAGE SYSTEM

REVISIONS								SHEET NO.
NO.	BY:	DATE:	NO.	BY:	DATE:			S3-14
1			3					TOTAL SHEETS
2			4					44

DRAWN BY : MTC DATE : 06-14
CHECKED BY : DJM DATE : 06-14

DOCUMENT NOT CONSIDERED FINAL UNLESS ALL SIGNATURES COMPLETED

STV / Ralph Whitehead Associates, Inc.
900 W Trade Street, Suite 715
Charlotte, NC 28202
NC License No. F-0991

alveyac 3/30/2015 1:40:14 PM I:\PROJ\25325I\ustation\struct\Final\403_04_U3308_SMU_SDS02.dgn

NOTES:

1. FOR NOTES, SEE SHEET 1 AND 2 OF 4.

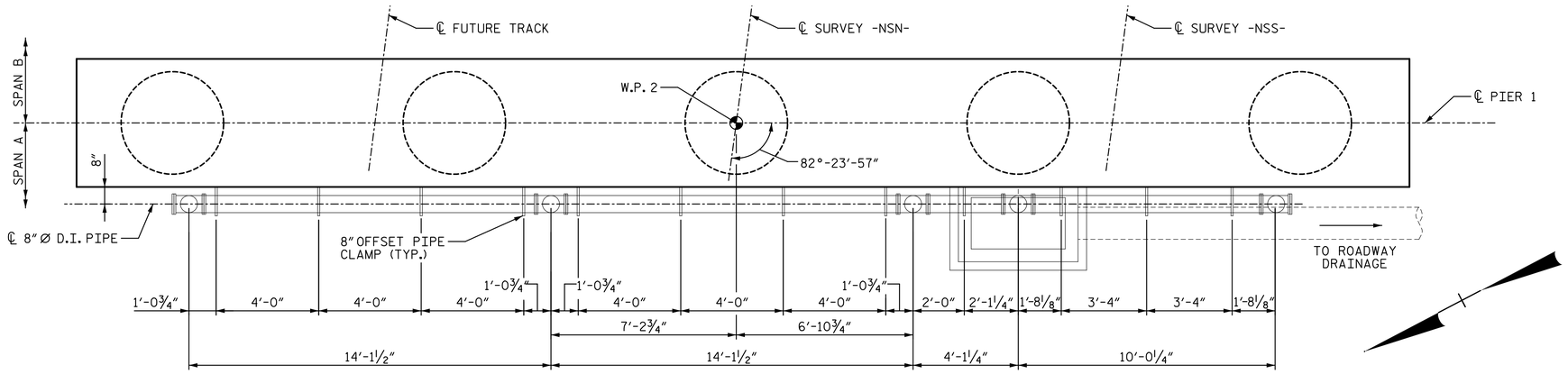

PLAN - PIER 1

(LOOKING UPSTATION)

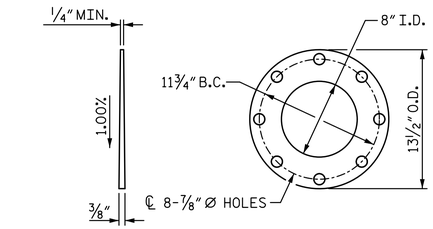

BEVELED STEEL WASHER DETAIL

(FOR 8" I.D. FLANGED PIPE)

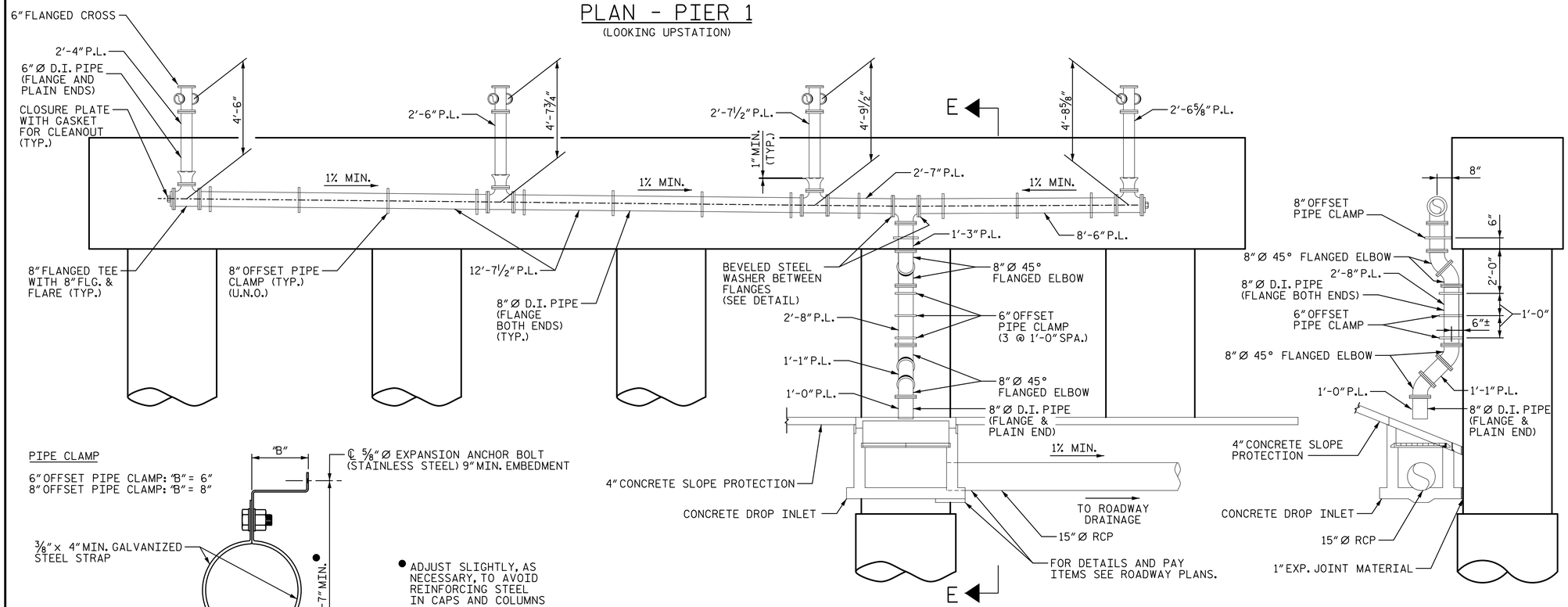

ELEVATION - PIER 1

(LOOKING UPSTATION)

SECTION E-E

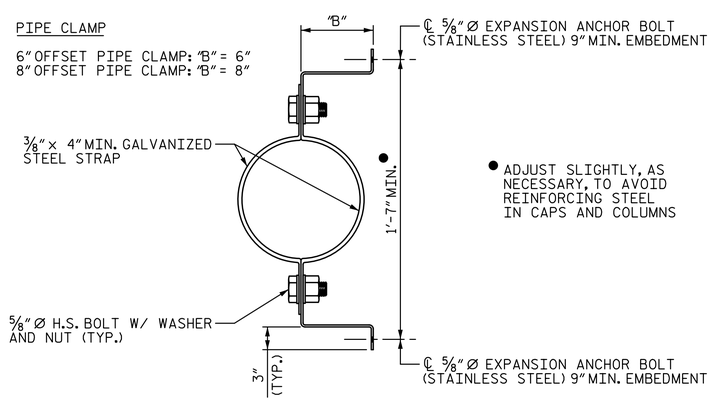

OFFSET PIPE CLAMP

PROJECT NO. U-3308

DURHAM COUNTY

STATION: POT 24+09.63 -LALT-
POT 21+11.43 -NSN-

SHEET 3 OF 4

STATE OF NORTH CAROLINA
DEPARTMENT OF TRANSPORTATION
RALEIGH

STRUCTURE DRAINAGE SYSTEM

DocuSigned by: Paul Kelly, Jr. 26ADE85DEC6A498...
3/31/2015

NORTH CAROLINA PROFESSIONAL SEAL 19765 ENGINEER PAUL E. KELLY, JR.

DOCUMENT NOT CONSIDERED FINAL UNLESS ALL SIGNATURES COMPLETED

STV / Ralph Whitehead Associates, Inc.
900 W Trade Street, Suite 715
Charlotte, NC 28202
NC License No. F-0991

REVISIONS							SHEET NO.
NO.	BY:	DATE:	NO.	BY:	DATE:		S3-15
1			3				TOTAL SHEETS
2			4				44

DRAWN BY : MTC DATE : 06-14
CHECKED BY : DJM DATE : 06-14

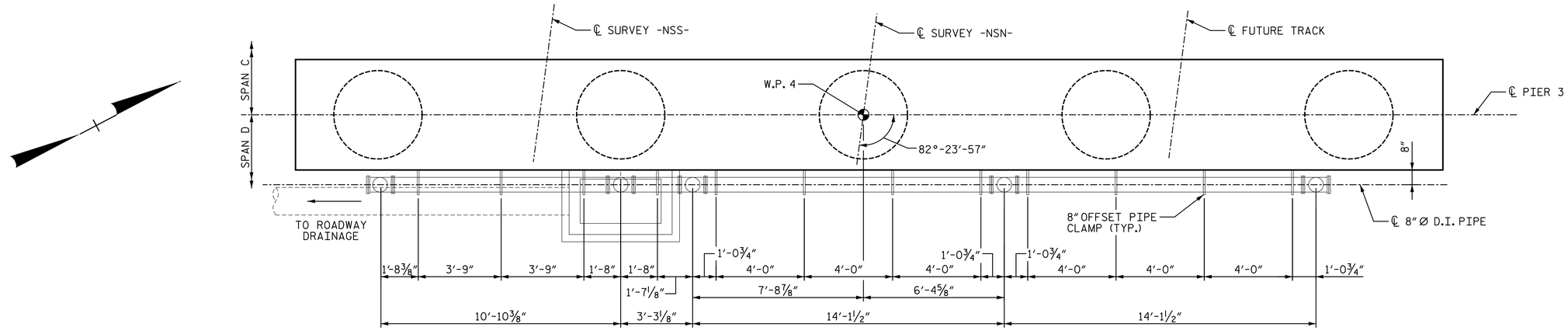

PLAN - PIER 3

(LOOKING DOWNSTATION)

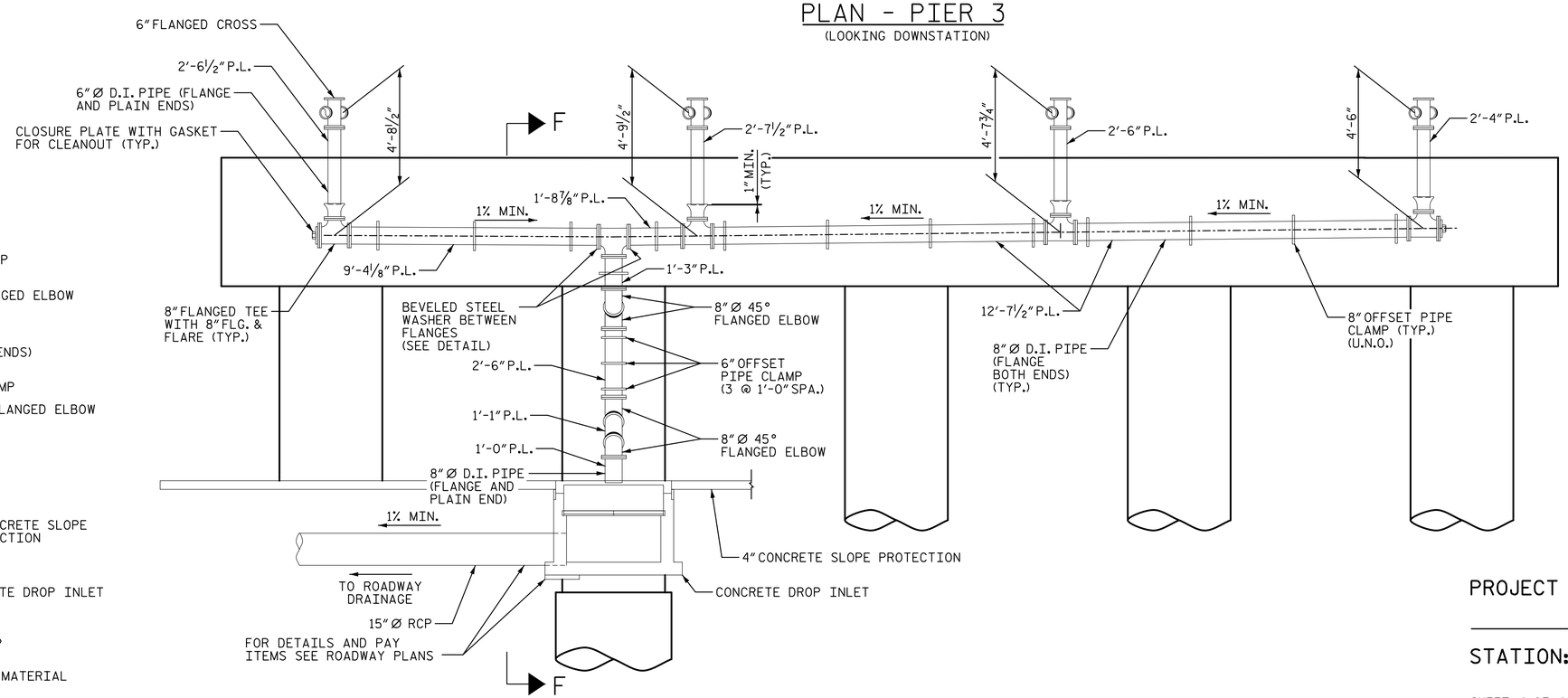

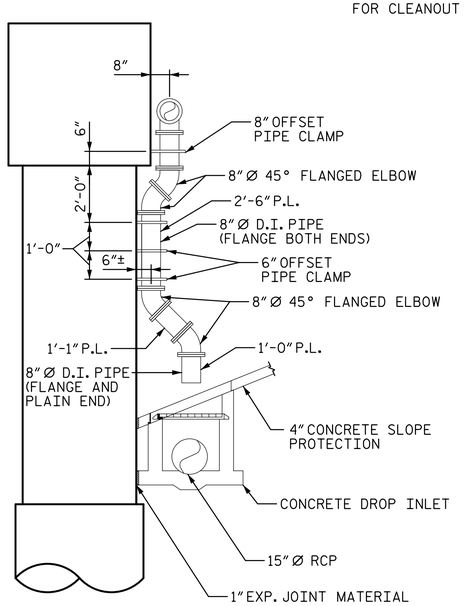

SECTION F-F

ELEVATION - PIER 3

(LOOKING DOWNSTATION)

NOTES:

1. FOR BEVELED STEEL WASHER DETAILS, SEE SHEET 3 OF 4.
2. FOR OFFSET PIPE CLAMP DETAILS, SEE SHEET 3 OF 4.

DocuSigned by: Paul Kelly Jr
26ADE85DEC6A498...

NORTH CAROLINA PROFESSIONAL SEAL 19765 ENGINEER PAUL E. KELLY, JR.
3/31/2015

PROJECT NO. U-3308

DURHAM COUNTY

STATION: POT 24+09.63 -LALT-
POT 21+11.43 -NSN-

SHEET 4 OF 4

STATE OF NORTH CAROLINA
DEPARTMENT OF TRANSPORTATION
RALEIGH

STRUCTURE DRAINAGE SYSTEM

REVISIONS							SHEET NO.
NO.	BY:	DATE:	NO.	BY:	DATE:		S3-16
1			3				TOTAL SHEETS
2			4				44

DRAWN BY : MTC DATE : 06-14
CHECKED BY : DJM DATE : 06-14

DOCUMENT NOT CONSIDERED FINAL UNLESS ALL SIGNATURES COMPLETED

STV / Ralph Whitehead Associates, Inc.
900 W Trade Street, Suite 715
Charlotte, NC 28202
NC License No. F-0991

dlveyac 3/30/2015 1:40:15 PM I:\PROJ\251325\ustation\struct\Final\403_016_U3308_SMU_SDS04.dgn

STRUCTURAL STEEL NOTES

STRUCTURAL STEEL: ALL STRUCTURAL STEEL SHAPES, PLATES AND BARS SHALL BE ASTM A709, GRADE 50 OR 50W, UNLESS NOTED OTHERWISE. FRACTURE CRITICAL MEMBERS SHALL BE ASTM A709, GRADE 50F2 OR 50WF2 (SUPPLEMENTAL REQUIREMENT S84 AND S29 SHALL APPLY). NON-FRACTURE CRITICAL MEMBERS SHALL BE ASTM A709, GRADE 50T2 OR 50WT2 (SUPPLEMENTAL REQUIREMENTS S83 SHALL APPLY). ALL STRUCTURAL STEEL SHALL BE IN ACCORDANCE WITH THE PROJECT SPECIFICATIONS AND THE FOLLOWING REQUIREMENTS:

1. THE MATERIAL SUPPLIED SHALL BE OTHER THAN RIMMED OR CAPPED STEEL.
2. THE MATERIAL SUPPLIED SHALL BE SILICONE KILLED, FINE GRAIN PRACTICE.
3. CERTAIN ELEMENTS OF THE STRUCTURE ARE NOTED AS "FRACTURE CRITICAL MEMBERS" (FCM) AND SHALL MEET THE REQUIREMENTS FOR "FRACTURE CONTROL PLAN FOR FRACTURE CRITICAL MEMBERS" (AREMA CHAPTER 15, SECTION 1.14.) THE IMPACT REQUIREMENTS FOR FRACTURE CRITICAL MEMBERS SHALL BE AS REQUIRED FOR ZONE 2 SERVICE TEMPERATURE. TEST RESULTS SHALL BE FURNISHED TO THE ENGINEER OR AUTHORIZED REPRESENTATIVE.
4. ALL NON-FRACTURE CRITICAL MEMBERS OF THE STRUCTURE SHALL CONFORM TO THE SUPPLEMENTAL REQUIREMENTS FOR NON-FRACTURE CRITICAL IMPACT TEST NOTED IN AREMA CHAPTER 15, SECTION 1.2.1, TABLE 15-1-2 FOR ZONE 2 SERVICE TEMPERATURE. TEST RESULTS SHALL BE FURNISHED TO ENGINEER OR AUTHORIZED REPRESENTATIVE.

ALL STEEL MATERIAL SHALL BE STRAIGHT AND FREE FROM SHARP KINKS AND BENDS. ANY STEEL MATERIAL EXHIBITING SUCH DEFICIENCIES SHALL BE CAUSE FOR THE REJECTION OF THE MATERIAL. STRAIGHTENING OF THE MATERIAL SHALL NOT BE ACCEPTABLE.

MATERIAL AND WORKMANSHIP: EXCEPT AS MAY OTHERWISE BE SPECIFIED ON THE PROJECT PLANS OR SPECIFICATIONS, ALL MATERIAL AND WORKMANSHIP SHALL BE IN ACCORDANCE WITH THE CURRENT EDITION OF AMERICAN RAILWAY ENGINEERING AND MAINTENANCE-OF-WAY ASSOCIATION (AREMA) MANUAL FOR RAILWAY ENGINEERING. PROJECT SHALL ALSO ADHERE TO STATE OF NORTH CAROLINA DEPARTMENT OF TRANSPORTATION (NCDOT) STANDARD SPECIFICATIONS, 2012 REVISION. IN THE EVENT OF CONFLICTS THE MORE STRINGENT SHALL APPLY.

SPECIFICATIONS: CURRENT EDITION, AMERICAN RAILWAY ENGINEERING AND MAINTENANCE-OF-WAY ASSOCIATION (AREMA) MANUAL FOR RAILWAY ENGINEERING, NORFOLK SOUTHERN UNDERPASS GRADE SEPARATION DESIGN CRITERIA, STATE OF NORTH CAROLINA DEPARTMENT OF TRANSPORTATION (NCDOT) STANDARD SPECIFICATIONS, 2012 REVISION.

ALL W-SHAPE BEAMS SHALL BE FABRICATED WITH THE NATURAL MILL CAMBER OF THE BEAM "UP".

ALL DIMENSIONS SHOWN ARE HORIZONTAL OR VERTICAL UNLESS OTHERWISE NOTED.

MILL TEST REPORTS: NORFOLK SOUTHERN RAILWAY COMPANY SHALL BE FURNISHED COPIES OF MILL TEST REPORTS FOR ALL MATERIALS EXCEPT MISCELLANEOUS PLATES AND SHAPES. REPORTS SHALL INDICATE COMPLIANCE WITH ALL SPECIFIED REQUIREMENTS.

INSPECTION: SHOP INSPECTION BY NORFOLK SOUTHERN RAILWAY COMPANY OR ITS AUTHORIZED AGENT, SEE "NS SPECIFICATIONS FOR STRUCTURAL STEEL" SPECIAL PROVISION FOR ADDITIONAL WELDING INSPECTION OF FLANGE PLATE TO WEB PLATES WELDS.

SHOP AND FIELD PAINT: ALL NEW STRUCTURAL STEEL MEMBERS, EXCEPT FAYING SURFACES, SHALL BE PAINTED IN ACCORDANCE WITH "NS SPECIFICATIONS FOR PAINTING SHOP FABRICATED BRIDGE STEEL" SPECIAL PROVISION. THE SYSTEM TO BE USED SHALL BE AN INORGANIC ZINC-ACRYLIC SYSTEM. TOP COAT SHALL BE APPLIED IN THE FIELD.

SHOP DRAWINGS: SHOP DRAWINGS SHALL BE APPROVED BY THE CHIEF ENGINEER BRIDGES & STRUCTURES, NORFOLK SOUTHERN CORPORATION, ATLANTA, GEORGIA. MATERIAL SHALL NOT BE FABRICATED UNTIL DRAWINGS HAVE BEEN APPROVED. COPIES OF APPROVED SHOP DRAWINGS ARE TO BE FURNISHED TO THE ENGINEER. SHOP DRAWINGS SHALL BE LABELED "NORFOLK SOUTHERN M.P. H-56.10".

HOLES: OPEN HOLES AS NOTED.

ANCHOR BOLTS SHALL BE GROUTED IN FORMED HOLES AFTER GIRDERS ARE ERECTED.

FOR PROTECTION OF PAINTED STEEL, SEE "NS SPECIFICATIONS FOR PAINTING SHOP FABRICATED BRIDGE STEEL" SPECIAL PROVISION.

FOR STRUCTURAL STEEL, SEE SPECIAL PROVISION "NS SPECIFICATIONS FOR STRUCTURAL STEEL".

WELDING: WELDING SHALL BE IN ACCORDANCE WITH AASHTO/ AWS-D1.5:2012 AND AMERICAN NATIONAL STANDARD, INCLUDING INTERIMS, AS MODIFIED OR SUPPLEMENTED BY THE AREMA MANUAL FOR RAILWAY ENGINEERING.

ALL WELDS SHALL BE MADE WITH E7018 ELECTRODES. WELDING SHALL BE PERFORMED WITH THE SUBMERGED ARC WELDING (SAW) OR SHIELDED METAL ARC WELDING (SMAW) PROCESS. FRACTURE-CRITICAL MEMBER FLANGE TO WEB WELDS SHALL BE MADE BY THE SUBMERGED ARC WELDING (SAW) PROCESS.

ALL WELDS ARE TO BE SHOP WELDS, UNLESS NOTED OTHERWISE. WELDING PROCEDURE AND SIZES SHALL BE AS SHOWN IN THE PROJECT PLANS.

THERE SHALL BE THOROUGH FUSION BETWEEN WELD METAL AND BASE METAL AND BETWEEN SUCCESSIVE PASSES OF THE WELD. ALL CRATERS SHALL BE FILLED TO THE FULL CROSS SECTION OF THE WELD.

PRIOR TO WELDING, EACH WELDER SHALL HAVE BEEN CERTIFIED IN ACCORDANCE WITH AWS REQUIREMENTS DURING A PERIOD OF ONE (1) YEAR PRIOR TO WORK ON THE BRIDGE. THE FABRICATOR SHALL FURNISH THE ENGINEER OR AUTHORIZED REPRESENTATIVE WITH AN AWS CERTIFICATE FOR EACH WELDER, COVERING THEIR ABILITY TO MAKE A COMPLETE AND SATISFACTORY WELD OF EACH KIND TO BE USED ON THE PROJECT.

SURFACES AND EDGES TO BE WELDED SHALL BE SMOOTH, UNIFORM AND FREE FROM FINS, TEARS CRACKS, OR OTHER DEFICIENCIES WHICH WOULD ADVERSELY AFFECT THE QUALITY OR STRENGTH OF THE WELD. SURFACES TO BE WELDED AND SURFACES ADJACENT TO A WELD SHALL ALSO BE FREE OF ANY SCALE, SLAG, RUST, MOISTURE, GREASE OR OTHER FOREIGN MATERIAL THAT WILL INHIBIT PROPER WELDING.

NON-DESTRUCTIVE TESTING OF THE FRACTURE CRITICAL MEMBERS IS TO BE PERFORMED BY AN INDEPENDENT TESTING COMPANY APPROVED BY THE ENGINEER AND CONTRACTED BY THE FABRICATOR. PERSONAL QUALIFICATIONS AND CERTIFICATION ARE TO BE IN ACCORDANCE WITH THE CURRENT AREMA MANUAL CHAPTER 15 FOR FRACTURE CRITICAL MEMBERS. COPIES OF THE TEST ARE TO BE FURNISHED TO THE ENGINEER OR AUTHORIZED REPRESENTATIVE FOR INCLUSION IN THEIR PROJECT FILE.

BOLTS: ALL BOLTED CONNECTIONS SHALL BE MADE WITH 7/8" DIA. ASTM A325, TYPE 3 BOLTS UNLESS NOTED OTHERWISE. NUTS AND WASHER SHALL BE A563, GRADE C3, AND F436, TYPE 3 RESPECTIVELY. ALL BOLTS, NUTS, AND WASHERS SHALL BE MECHANICALLY GALVANIZED UNLESS NOTED OTHERWISE. OPEN HOLES SHALL BE 15/16" DIA. UNLESS NOTED OTHERWISE. ALL BOLTS, NUTS, AND WASHERS WILL BE SUPPLIED FROM A SINGLE SOURCE WITH DOCUMENTATION OF THEIR SOURCE AND QUALITY CERTIFICATION. ALL HIGH STRENGTH BOLTS SHALL BE TIGHTENED BY THE "TURN-OF-NUT METHOD" IN ACCORDANCE WITH AREMA MANUAL CHAPTER 15, SECTION 3.2.3 - INSTALLATION OF HIGH STRENGTH BOLTS. ANY BOLTS THAT REQUIRE REMOVAL AFTER BEING TIGHTENED SHALL BE DISCARDED AND A NEW BOLT INSTALLED, UNLESS OTHERWISE NOTED.

ALL BOLT HOLES SHALL BE SUB-DRILLED AND REAMED OR DRILLED FROM THE SOLID. AT NO TIME ARE HOLES TO BE SUB-PUNCHED AND REAMED OR PUNCHED FULL SIZE.

BOLTS SHALL BE INSTALLED WITH THE BOLT HEADS EXPOSED TO THE WEATHER. THE SPECIFIED WASHERS SHALL BE INSTALLED BENEATH THE TURNING ELEMENT. VERTICALLY POSITIONED BOLTS WHICH HAVE BOTH THE HEAD AND NUT EXPOSED TO WEATHER SHALL HAVE THE HEAD PLACED ABOVE THE NUT. HORIZONTAL POSITIONED NUTS SHALL HAVE THE HEADS ON THE VISIBLE SIDE OF THE CONNECTION.

PROJECT NO. U-3308
DURHAM COUNTY
STATION: POT 24+09.63 -LALT-
POT 21+11.43 -NSN-

DocuSigned by: Paul Kelly Jr
26ADE85DEC6A498...

NORTH CAROLINA PROFESSIONAL SEAL 19765 ENGINEER PAUL E. KELLY, JR.
3/31/2015

STATE OF NORTH CAROLINA
DEPARTMENT OF TRANSPORTATION
RALEIGH

STRUCTURAL STEEL NOTES

REVISIONS							SHEET NO.
NO.	BY:	DATE:	NO.	BY:	DATE:		S3-17
1			3				TOTAL SHEETS
2			4				44

STV / Ralph Whitehead Associates, Inc.
900 W Trade Street, Suite 715
Charlotte, NC 28202
NC License No. F-0991

DOCUMENT NOT CONSIDERED FINAL UNLESS ALL SIGNATURES COMPLETED

DRAWN BY : NMC DATE : 6-14
CHECKED BY : DJM DATE : 6-14

NOTES:

1. ALL DIMENSIONS ON THIS SHEET ARE HORIZONTAL.
2. FOR PIPE SUPPORT ANGLE (PSA) DETAILS, SEE "STRUCTURE DRAINAGE SYSTEM" SHEET 2 OF 4.
3. FOR DIAPHRAGM SUPPORT ANGLE (DSA) DETAILS, SEE "STRUCTURE DRAINAGE SYSTEM" SHEET 2 OF 4 AND "STRUCTURAL STEEL DETAILS" SHEET.

• DIMENSIONS ARE ALONG ℄ SURVEY -NSN-.

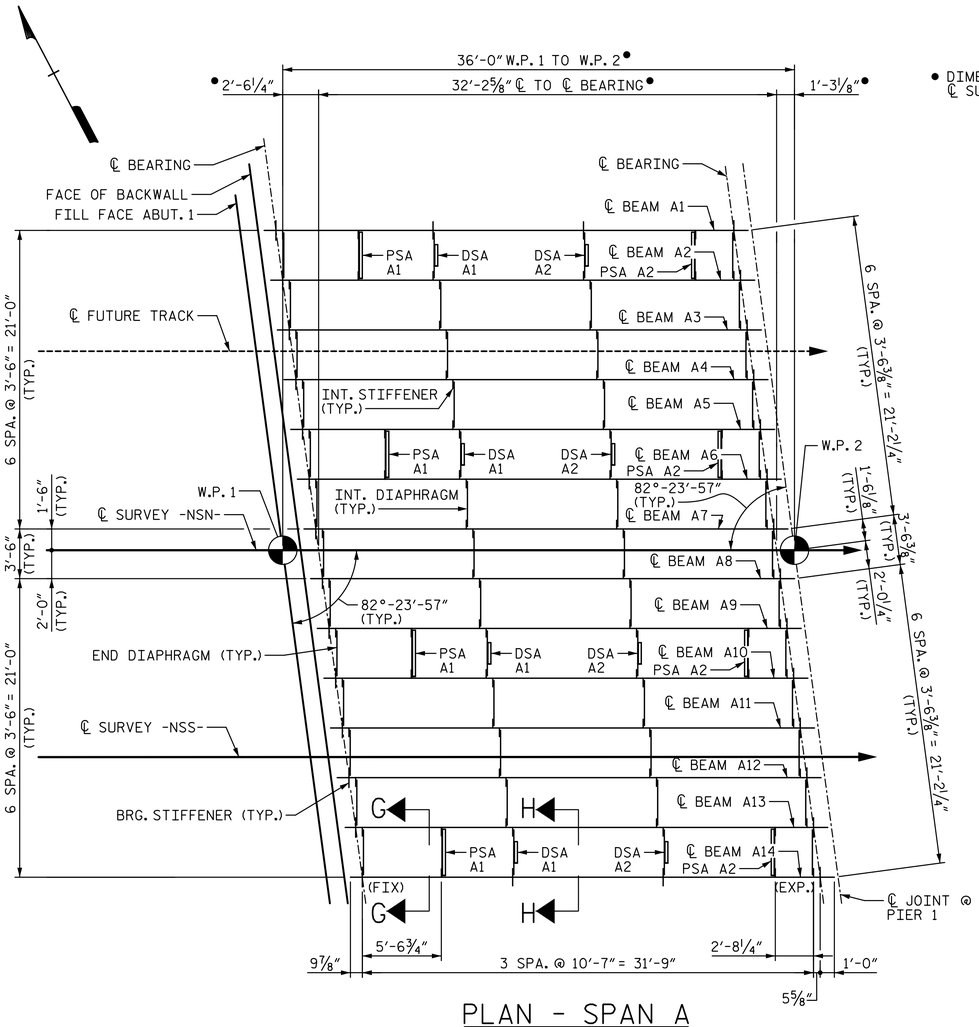

PLAN - SPAN A

ALL BEAMS ARE PARALLEL TO ℄ SURVEY -NSN-

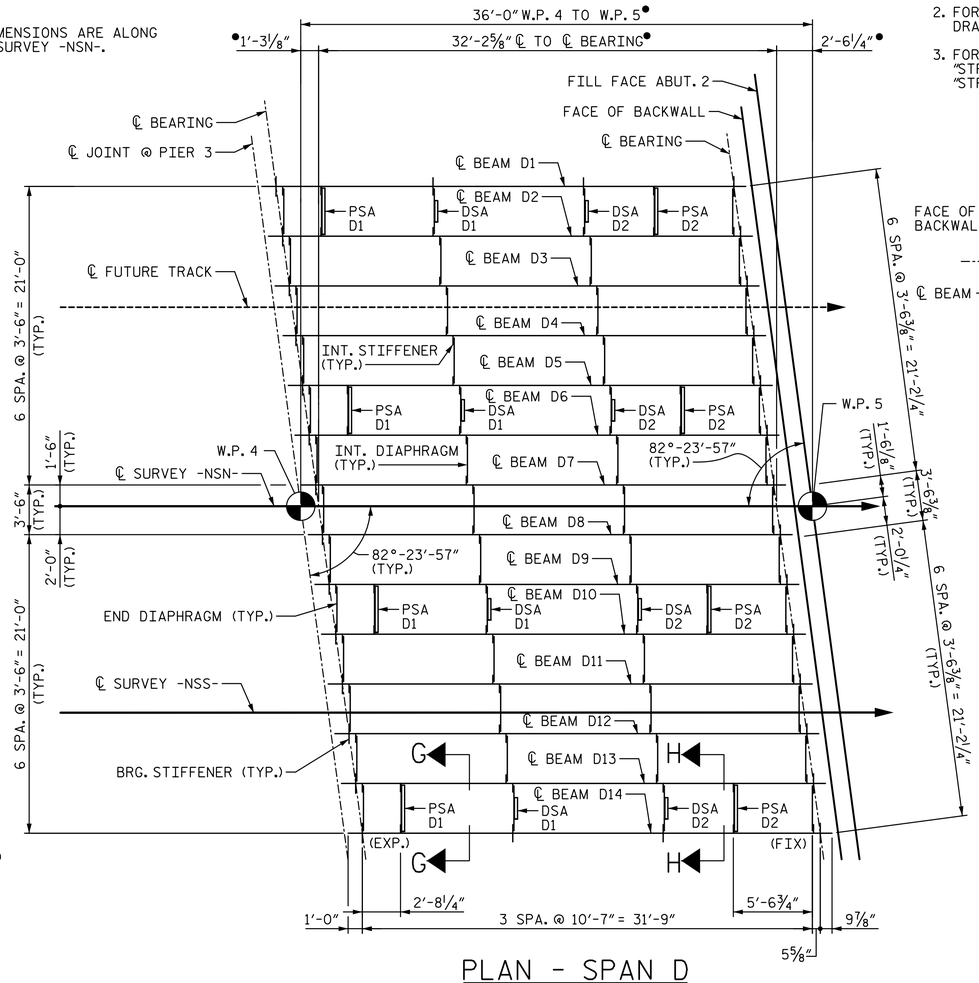

PLAN - SPAN D

ALL BEAMS ARE PARALLEL TO ℄ SURVEY -NSN-

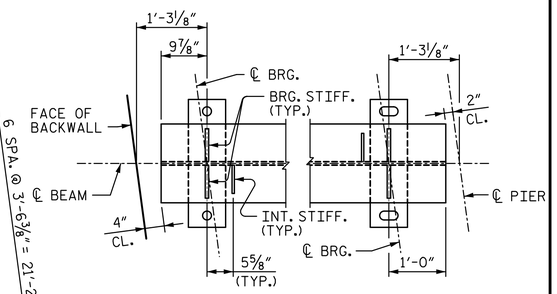

FIXED BEARING

EXPANSION BEARING

BEARING LOCATION DETAIL

SPAN "A" SHOWN, SPAN "D" OPPOSITE HAND

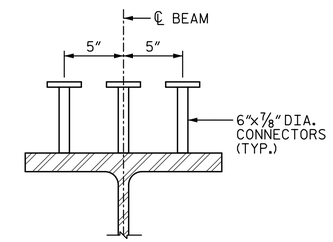

SHEAR CONNECTOR DETAIL

(TYP. FOR ALL BEAMS)

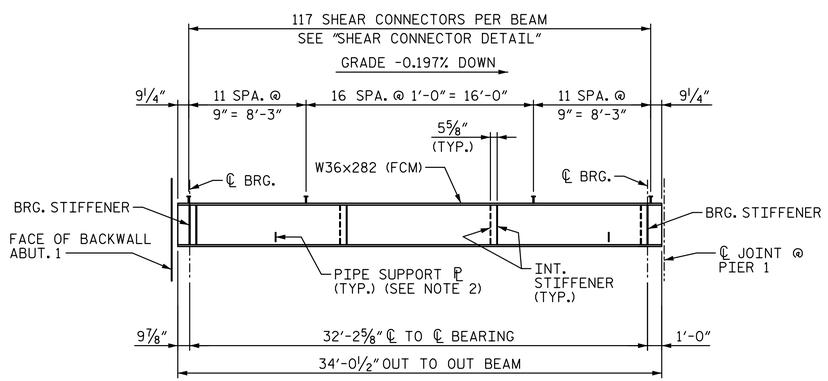

ELEVATION - SPAN A

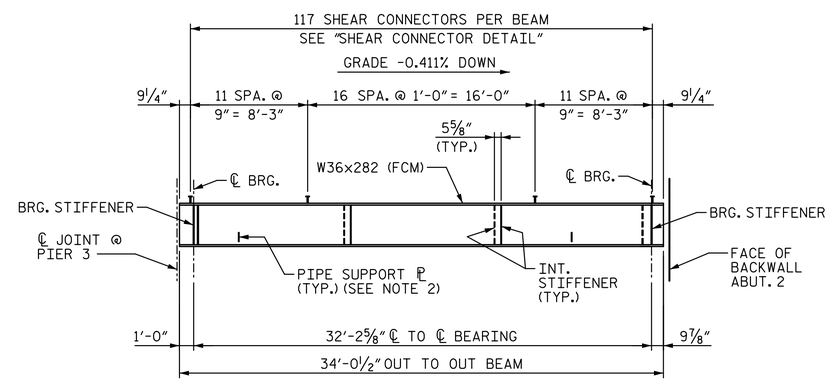

ELEVATION - SPAN D

DocuSigned by: Paul Kelly Jr
26ADE85DEC6A498...

NORTH CAROLINA PROFESSIONAL SEAL 19765 ENGINEER PAUL E. KELLY, JR.
3/31/2015

PROJECT NO. U-3308

DURHAM COUNTY

STATION: POT 24+09.63 -LALT-
POT 21+11.43 -NSN-

SHEET 1 OF 3

STATE OF NORTH CAROLINA
DEPARTMENT OF TRANSPORTATION
RALEIGH

FRAMING PLAN & GIRDER DETAILS

REVISIONS						SHEET NO.
NO.	BY:	DATE:	NO.	BY:	DATE:	S3-18
1			3			TOTAL SHEETS
2			4			44

DRAWN BY : MTC DATE : 06-14
CHECKED BY : DJM DATE : 06-14

DOCUMENT NOT CONSIDERED FINAL UNLESS ALL SIGNATURES COMPLETED

STV / Ralph Whitehead Associates, Inc.
900 W Trade Street, Suite 715
Charlotte, NC 28202
NC License No. F-0991

NOTES:

1. ALL DIMENSIONS ON THIS SHEET ARE HORIZONTAL.
2. FOR PIPE SUPPORT ANGLE (PSA) DETAILS, SEE "STRUCTURE DRAINAGE SYSTEM" SHEET 2 OF 4.
3. FOR DIAPHRAGM SUPPORT ANGLE (DSA) DETAILS, SEE "STRUCTURE DRAINAGE SYSTEM" SHEET 2 OF 4 AND "STRUCTURAL STEEL DETAILS" SHEET.
4. FOR SHEAR CONNECTOR DETAIL, SEE SHEET 1 OF 3.

●DIMENSIONS ARE ALONG ℄ SURVEY -NSN-.

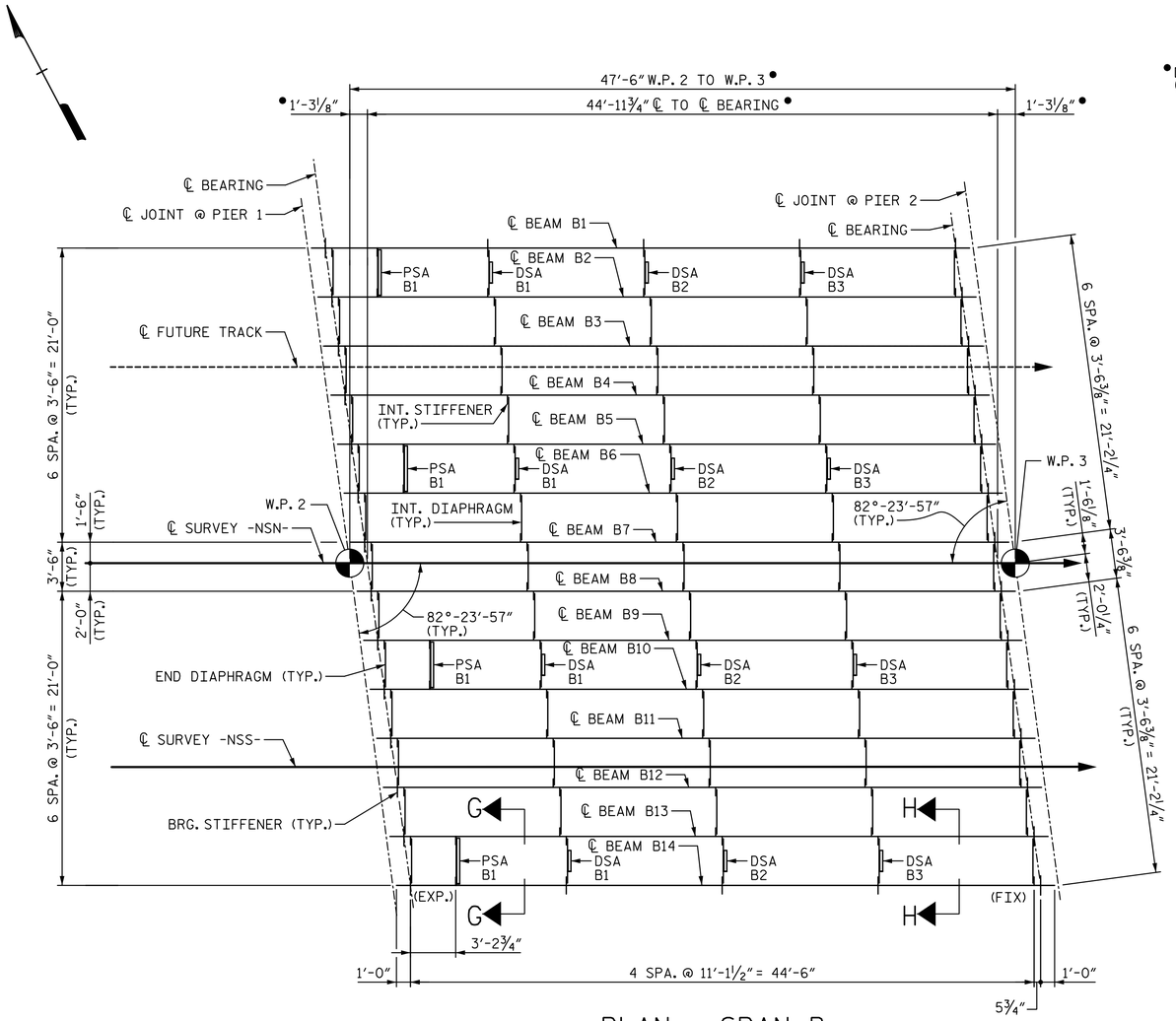

PLAN - SPAN B

ALL BEAMS ARE PARALLEL TO ℄ SURVEY -NSN-

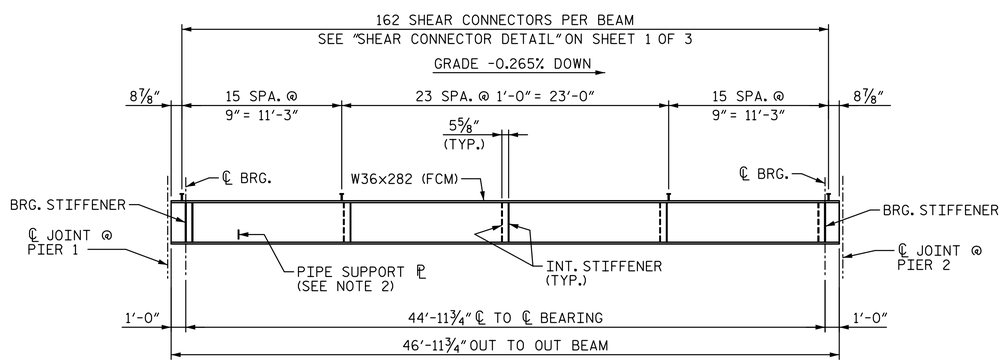

ELEVATION - SPAN B

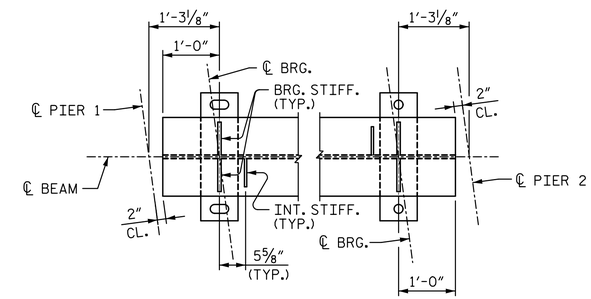

BEARING LOCATION DETAIL

PROJECT NO. U-3308

DURHAM COUNTY

STATION: POT 24+09.63 -LALT-
POT 21+11.43 -NSN-

SHEET 2 OF 3

STATE OF NORTH CAROLINA
DEPARTMENT OF TRANSPORTATION
RALEIGH

FRAMING PLAN & GIRDER DETAILS

DocuSigned by: Paul Kelly Jr. 26ADE85DEC6A498...

NORTH CAROLINA PROFESSIONAL SEAL 19765 ENGINEER PAUL E. KELLY, JR.

3/31/2015

DOCUMENT NOT CONSIDERED FINAL UNLESS ALL SIGNATURES COMPLETED

STV / Ralph Whitehead Associates, Inc.
900 W Trade Street, Suite 715
Charlotte, NC 28202
NC License No. F-0991

REVISIONS								SHEET NO.
NO.	BY:	DATE:	NO.	BY:	DATE:			S3-19
1			3					TOTAL SHEETS
2			4					44

DRAWN BY : MTC DATE : 06-14
CHECKED BY : DJM DATE : 06-14

NOTES:

1. ALL DIMENSIONS ON THIS SHEET ARE HORIZONTAL.
2. FOR PIPE SUPPORT ANGLE (PSA) DETAILS, SEE "STRUCTURE DRAINAGE SYSTEM" SHEET 2 OF 4.
3. FOR DIAPHRAGM SUPPORT ANGLE (DSA) DETAILS, SEE "STRUCTURE DRAINAGE SYSTEM" SHEET 2 OF 4 AND "STRUCTURAL STEEL DETAILS" SHEET.
4. FOR SHEAR CONNECTOR DETAIL, SEE SHEET 1 OF 3.

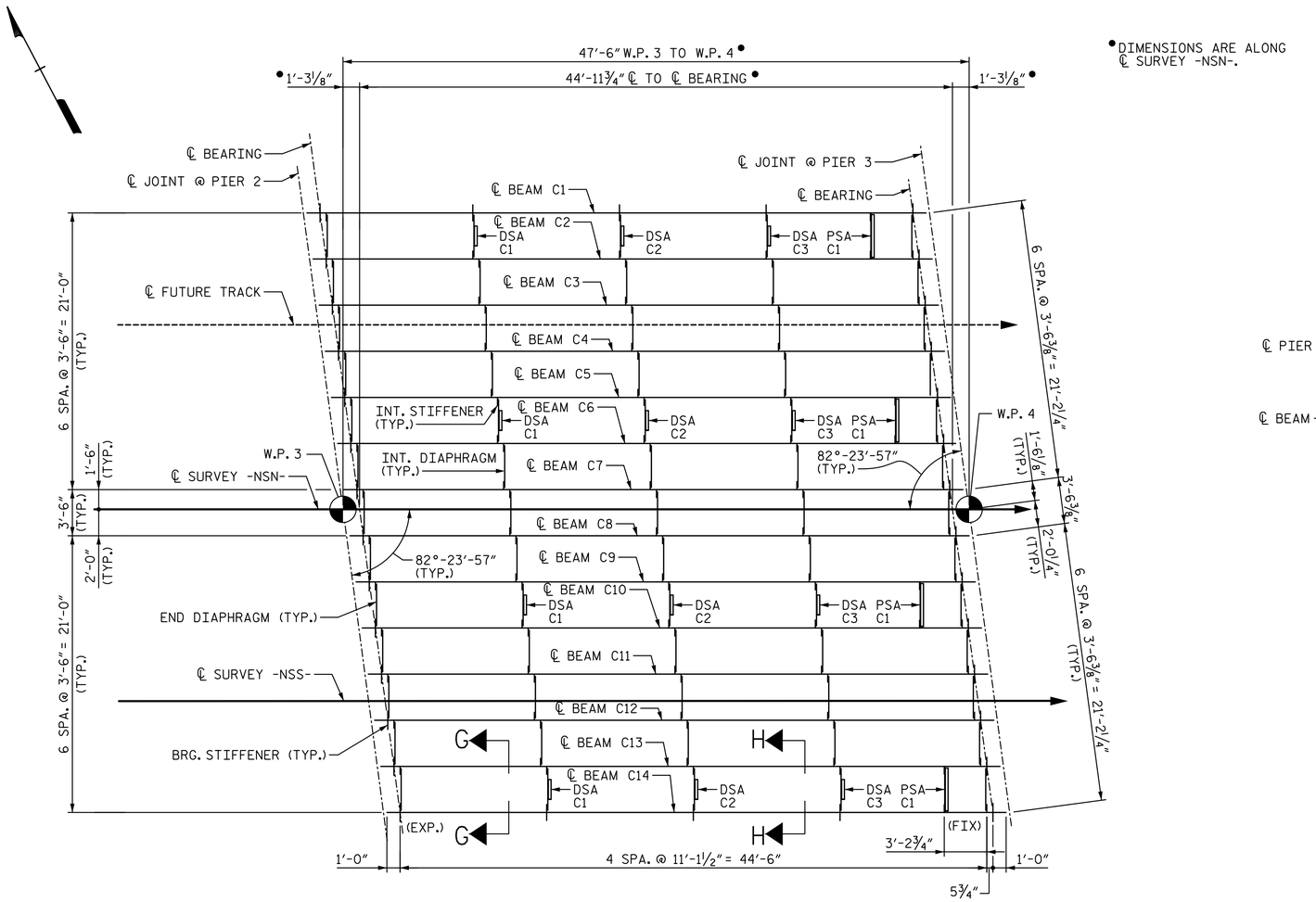

PLAN - SPAN C

ALL BEAMS ARE PARALLEL TO ℄ SURVEY -NSN-

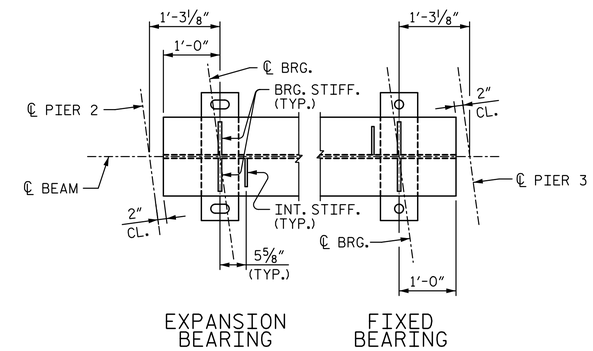

BEARING LOCATION DETAIL

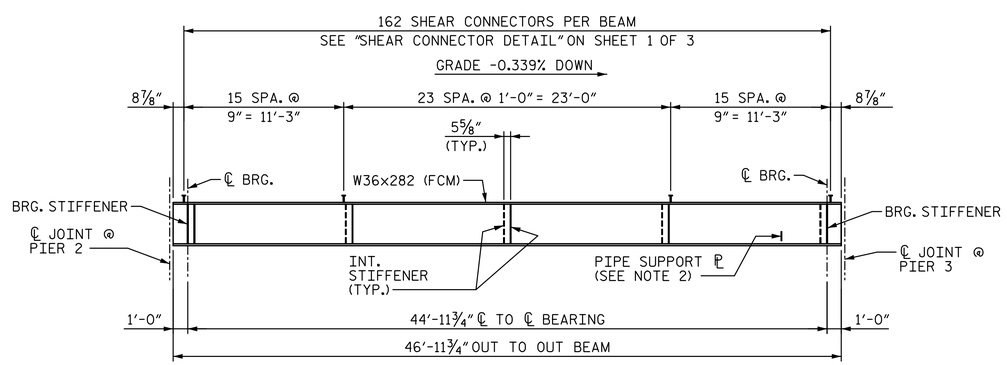

ELEVATION - SPAN C

PROJECT NO. U-3308

DURHAM COUNTY

STATION: POT 24+09.63 -LALT-
POT 21+11.43 -NSN-

SHEET 3 OF 3

STATE OF NORTH CAROLINA
DEPARTMENT OF TRANSPORTATION
RALEIGH

FRAMING PLAN & GIRDER DETAILS

DocuSigned by: Paul Kelly Jr. 26ADE85DEC6A498...

NORTH CAROLINA PROFESSIONAL SEAL 19765 ENGINEER PAUL E. KELLY, JR.

3/31/2015

REVISIONS						
NO.	BY:	DATE:	NO.	BY:	DATE:	
1			3			
2			4			

SHEET NO. S3-20

TOTAL SHEETS 44

DRAWN BY : MTC DATE : 06-14
CHECKED BY : DJM DATE : 06-14

DOCUMENT NOT CONSIDERED FINAL UNLESS ALL SIGNATURES COMPLETED

STV / Ralph Whitehead Associates, Inc.
900 W Trade Street, Suite 715
Charlotte, NC 28202
NC License No. F-0991

NOTES:

1. FOR ADDITIONAL NOTES, SEE "STRUCTURAL STEEL NOTES" SHEET.

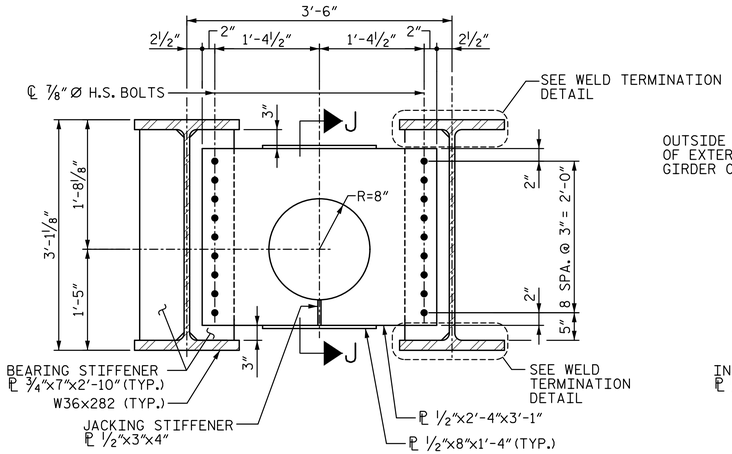

SECTION G-G

END DIAPHRAGM AND BEARING STIFFENERS

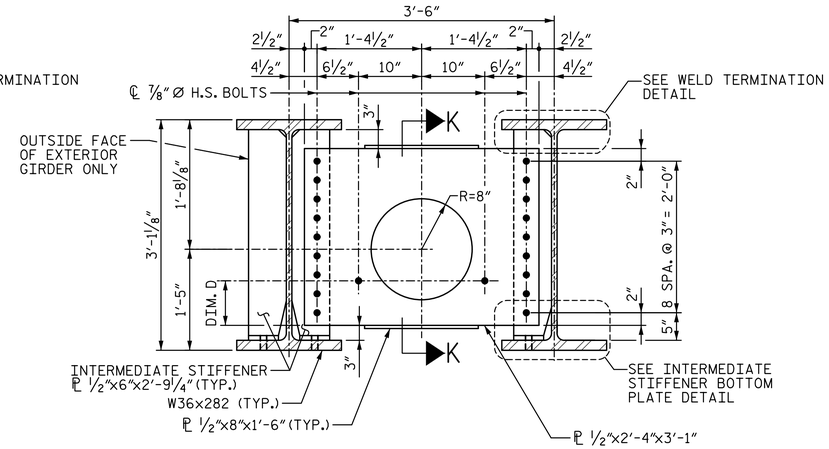

SECTION H-H

INTERMEDIATE DIAPHRAGM

SECTION K-K

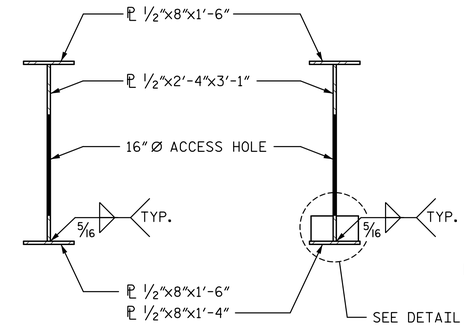

SECTION J-J

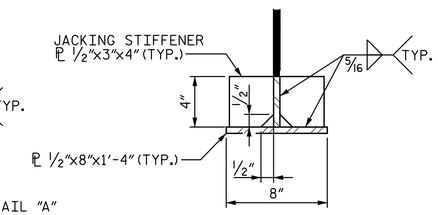

DETAIL "A"

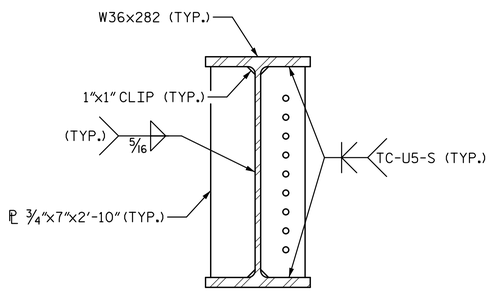

BEARING STIFFENER DETAIL

DSA	DIM. D
A1	5"
A2	4"
B1	5⅜"
B2	7⅛"
B3	8¾"
C1	7⅜"
C2	6½"
C3	5⅝"
D1	6"
D2	7¾"

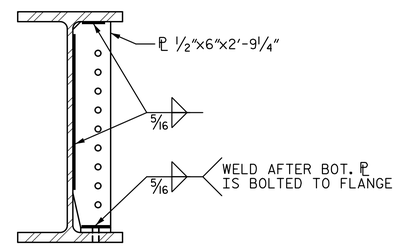

INTERMEDIATE STIFFENER DETAIL

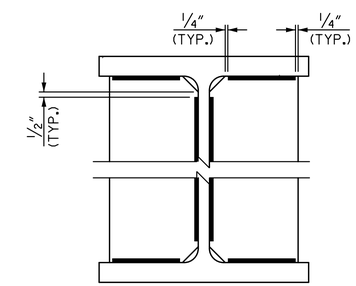

WELD TERMINATION DETAIL

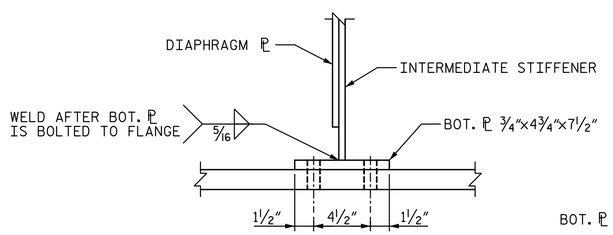

SIDE ELEVATION

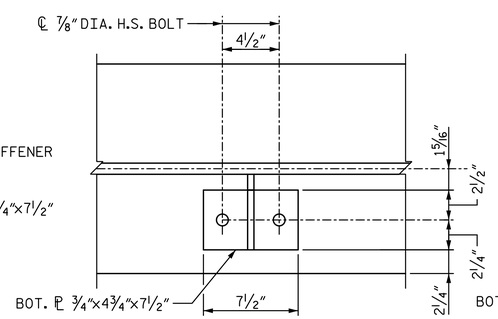

PLAN - BOTTOM FLANGE

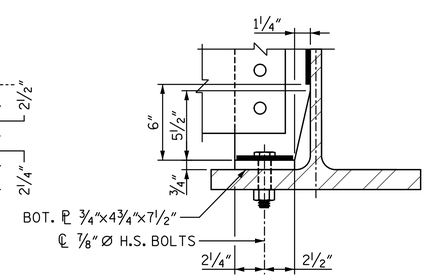

FRONT ELEVATION

INTERMEDIATE STIFFENER BOTTOM PLATE

PROJECT NO. U-3308

DURHAM COUNTY

STATION: POT 24+09.63 -LALT-
POT 21+11.43 -NSN-

STATE OF NORTH CAROLINA
DEPARTMENT OF TRANSPORTATION
RALEIGH

STRUCTURAL STEEL DETAILS

DocuSigned by: Paul Kelly Jr. 26ADE85DEC6A498...

NORTH CAROLINA PROFESSIONAL SEAL 19765 ENGINEER PAUL E. KELLY, JR.

3/31/2015

REVISIONS						
NO.	BY:	DATE:	NO.	BY:	DATE:	
1			3			
2			4			

SHEET NO. S3-21

TOTAL SHEETS 44

DRAWN BY : NMC DATE : 06-14
CHECKED BY : DJM DATE : 06-14

DOCUMENT NOT CONSIDERED FINAL UNLESS ALL SIGNATURES COMPLETED

STV / Ralph Whitehead Associates, Inc.
900 W Trade Street, Suite 715
Charlotte, NC 28202
NC License No. F-0991

alveyac 3/30/2015 1:40:17 PM I:\PROJ\25325\ustation\struct\Final\403_02L_U3308_SMU_SS001.dgn

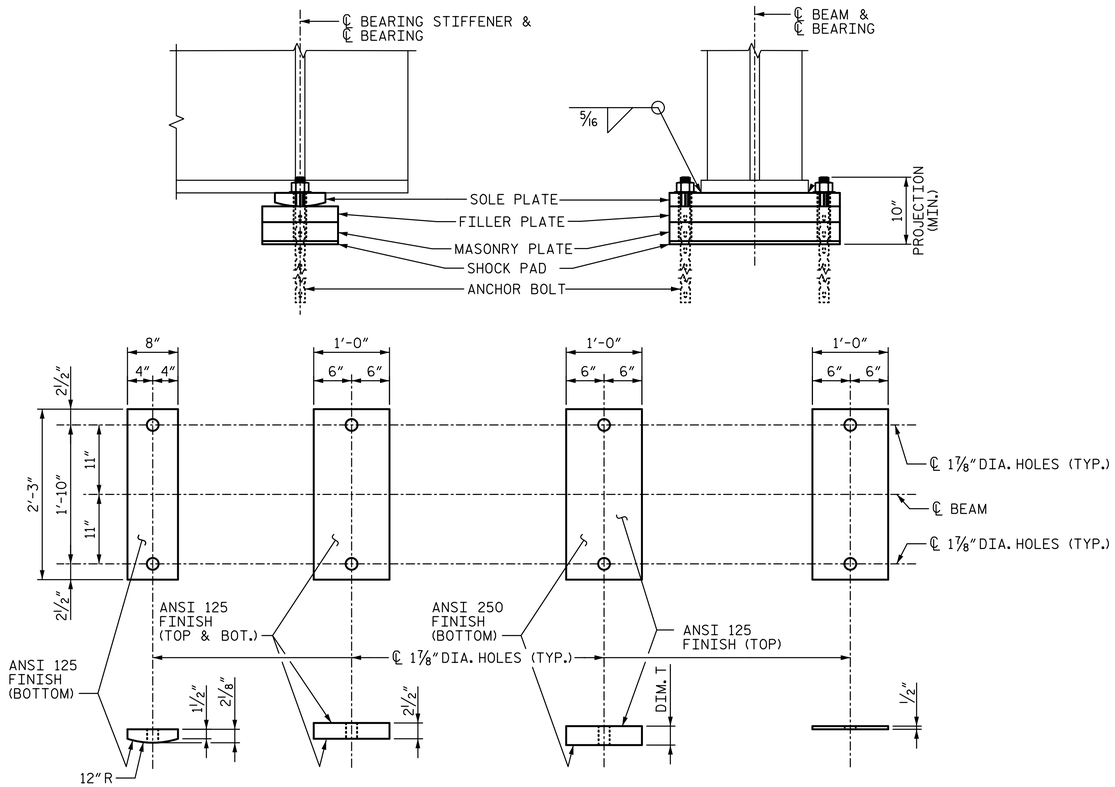

BEARING ASSEMBLY - FIXED

(56 REQ'D)

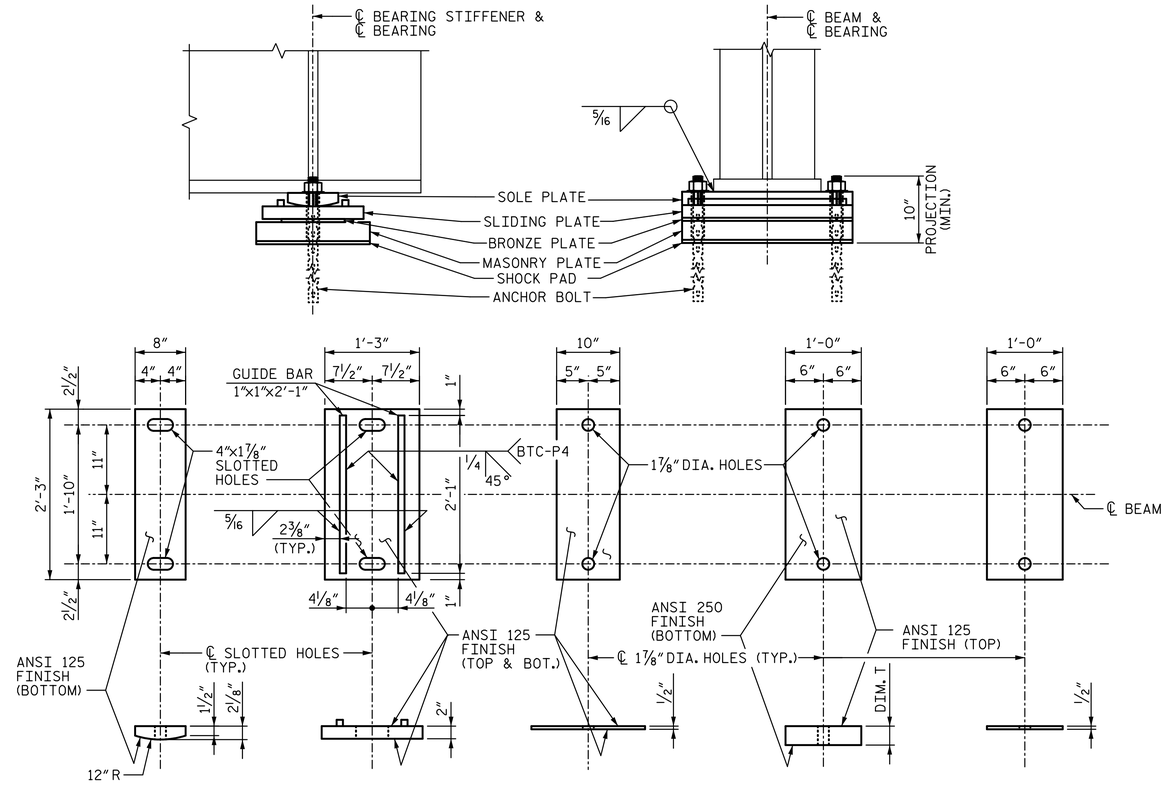

BEARING ASSEMBLY - EXPANSION

(56 REQ'D)

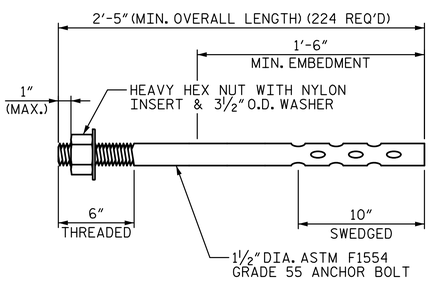

ANCHOR BOLT DETAIL

NOTES:

ANCHOR BOLTS SHALL CONFORM TO ASTM F1554, GRADE 55, AS DESIGNATED IN THE PROJECT PLANS. ANCHOR BOLTS SHALL NOT BE PAINTED. ANCHOR BOLT NUTS AND WASHER SHALL CONFORM TO ASTM A563, GRADE C3 HEAVY HEX WITH NYLON INSERT AND ASTM F436, TYPE 3 CIRCULAR WASHERS, RESPECTIVELY. ANCHOR BOLTS AND ALL ASSOCIATED HARDWARE SHALL BE HOT DIPPED GALVANIZED IN ACCORDANCE WITH ASTM A153, CLASS C.

AT ALL POINTS OF SUPPORT, NUTS FOR ANCHOR BOLTS SHALL BE TIGHTENED FINGER TIGHT AND GIVEN AN ADDITIONAL ¼ TURN. THE THREAD OF THE NUT AND BOLT SHALL THEN BE BURRED WITH A SHARP POINTED TOOL.

ALL BOLT HOLES SHALL BE SUB-DRILLED AND REAMED OR DRILLED FROM THE SOLID. AT NO TIME ARE HOLES TO BE SUB-PUNCHED AND REAMED OR PUNCHED FULL SIZE.

SHOCK PADS SHALL BE PREFORMED FABRIC BEARING PADS, ½" THICK, AND SHALL BE EITHER SHOCK PAD STYLE 15175, AS MANUFACTURED BY THE ALERT MANUFACTURING AND SUPPLY COMPANY, CHICAGO, IL; OR FABREEKA PADS, AS MANUFACTURED BY THE FABREEKA PRODUCTS COMPANY, BOSTON, MA; OR SORBTEX PADS, AS MANUFACTURED BY VOSS ENGINEERING, INC., CHICAGO, IL; OR AN APPROVED EQUAL.

SEE "TOTAL BILL OF MATERIAL & GENERAL NOTES" AND "STRUCTURAL STEEL NOTES" SHEETS FOR ADDITIONAL INFORMATION.

ALL STEEL BEARING PLATES SHALL BE ASTM A709 GRADE 50 AND SHALL BE HOT DIPPED GALVANIZED IN ACCORDANCE WITH THE STANDARD SPECIFICATIONS.

ALL SURFACES OF BEARING PLATES SHALL BE SMOOTH AND STRAIGHT.

BEARING DIMENSION - T

SPAN	LOCATION	TYPE	BEAM 1	BEAM 2	BEAM 3	BEAM 4	BEAM 5	BEAM 6	BEAM 7	BEAM 8	BEAM 9	BEAM 10	BEAM 11	BEAM 12	BEAM 13	BEAM 14
			DIM. T	DIM. T	DIM. T	DIM. T	DIM. T	DIM. T	DIM. T	DIM. T	DIM. T	DIM. T	DIM. T	DIM. T	DIM. T	DIM. T
A	ABUTMENT 1	FIXED	3⅛"	3⅛"	3⅛"	3⅛"	3⅛"	3⅛"	3⅛"	3"	3"	3"	3"	3"	3"	3"
A	PIER 1	EXPANSION	3⅛"	3⅛"	3⅛"	3⅛"	3⅛"	3⅛"	3⅛"	3"	3"	3"	3"	3"	3"	3"
B	PIER 1	EXPANSION	3⅛"	3⅛"	3⅛"	3⅛"	3⅛"	3⅛"	3⅛"	3"	3"	3"	3"	3"	3"	3"
B	PIER 2	FIXED	3⅛"	3⅛"	3⅛"	3⅛"	3⅛"	3⅛"	3⅛"	3"	3"	3"	3"	3"	3"	3"
C	PIER 2	EXPANSION	3¼"	3¼"	3¼"	3¼"	3⅛"	3⅛"	3⅛"	3"	3"	3"	3"	3"	3"	3"
C	PIER 3	FIXED	3¼"	3¼"	3¼"	3¼"	3⅛"	3⅛"	3⅛"	3⅛"	3⅛"	3⅛"	3"	3"	3"	3"
D	PIER 3	EXPANSION	3¼"	3¼"	3¼"	3¼"	3⅛"	3⅛"	3⅛"	3⅛"	3⅛"	3⅛"	3"	3"	3"	3"
D	ABUTMENT 2	FIXED	3¼"	3¼"	3¼"	3¼"	3⅛"	3⅛"	3⅛"	3⅛"	3⅛"	3⅛"	3"	3"	3"	3"

DocuSigned by: Paul Kelly Jr
26ADE85DEC6A498...

NORTH CAROLINA PROFESSIONAL SEAL 19765 ENGINEER PAUL E. KELLY, JR.
3/31/2015

PROJECT NO. U-3308

DURHAM COUNTY

STATION: POT 24+09.63 -LALT-
POT 21+11.43 -NSN-

STATE OF NORTH CAROLINA
DEPARTMENT OF TRANSPORTATION
RALEIGH

BEARING DETAILS

REVISIONS						
NO.	BY:	DATE:	NO.	BY:	DATE:	
1			3			
2			4			

SHEET NO. S3-22

TOTAL SHEETS 44

DRAWN BY : MTC DATE : 06-14
CHECKED BY : DJM DATE : 06-14

DOCUMENT NOT CONSIDERED FINAL UNLESS ALL SIGNATURES COMPLETED

STV / Ralph Whitehead Associates, Inc.
900 W Trade Street, Suite 715
Charlotte, NC 28202
NC License No. F-0991

NOTES:

1. FOR NOTES, SEE SHEET 2 OF 2.

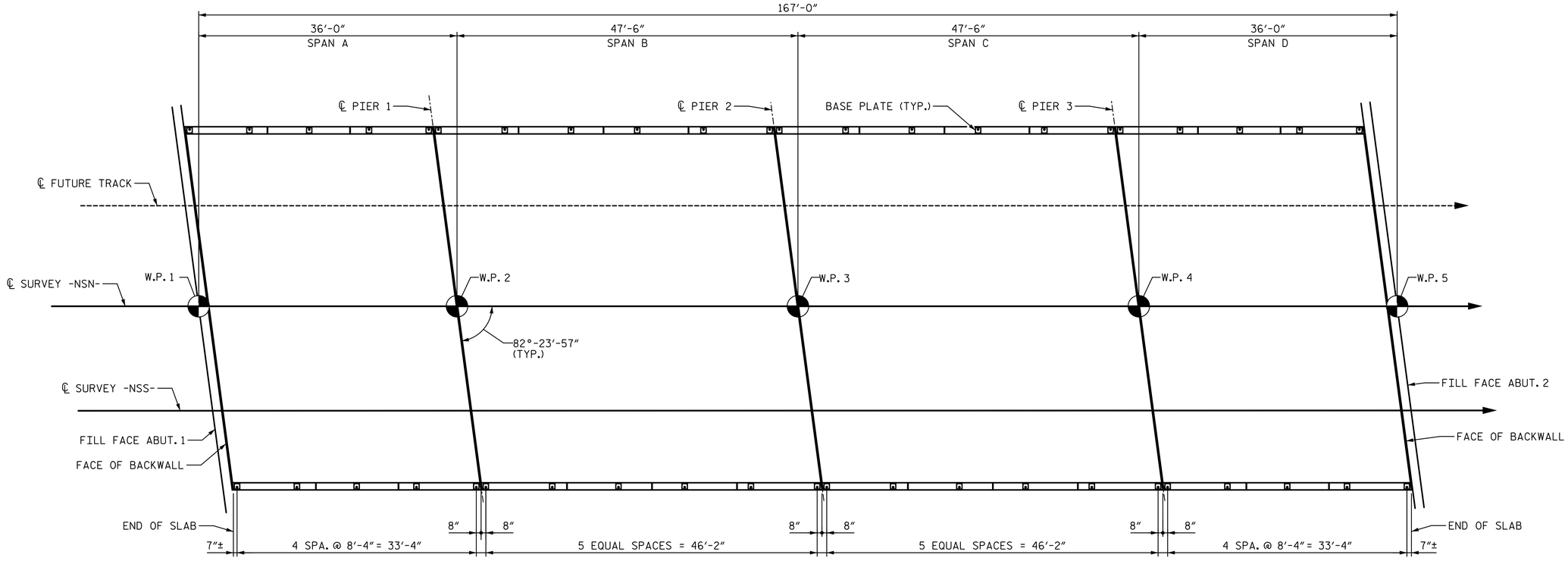

FENCE AND HANDRAIL POST SPACING

PAY LENGTH = 370.2 LIN. FT.

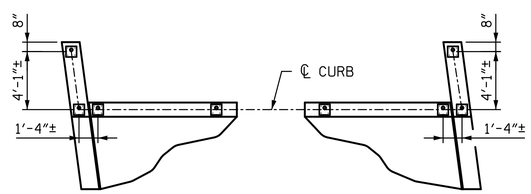

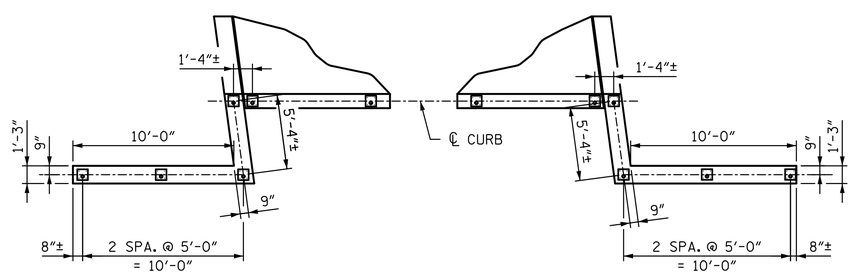

FENCE AND HANDRAIL POST SPACING - WING DETAILS

PROJECT NO. U-3308

DURHAM COUNTY

STATION: POT 24+09.63 -LALT-
POT 21+11.43 -NSN-

SHEET 1 OF 2

STATE OF NORTH CAROLINA
DEPARTMENT OF TRANSPORTATION
RALEIGH

HANDRAIL AND FENCE DETAILS

DocuSigned by: Paul Kelly Jr
26ADE85DEC6A498...

NORTH CAROLINA PROFESSIONAL SEAL 19765 ENGINEER PAUL E. KELLY, JR.
3/31/2015

DOCUMENT NOT CONSIDERED FINAL UNLESS ALL SIGNATURES COMPLETED

STV / Ralph Whitehead Associates, Inc.
900 W Trade Street, Suite 715
Charlotte, NC 28202
NC License No. F-0991

REVISIONS								SHEET NO.
NO.	BY:	DATE:	NO.	BY:	DATE:			S3-23
1			3					TOTAL SHEETS
2			4					44

DRAWN BY : MTC DATE : 06-14
CHECKED BY : DJM DATE : 06-14

alveyac 3/30/2015 1:40:18 PM I:\PROJ\25\325\ustation\struct\Final\403_023_U3308_SMU_HRFD01.dgn

NOTES FOR HANDRAIL AND FENCING

1. ALL HANDRAIL PIPE, SLEEVES, AND EXPANSION JOINTS TO BE SMOOTH AND FREE OF SHARP EDGES.
2. ALUMINUM PIPE TO BE ASTM B-241. ALLOY 6061-T6, ALUMINUM BASE PLATE, CLOSURE PLATE, AND HANDRAIL PLATE TO BE ASTM B-209, ALLOY 6061-T6.
3. FENCE FABRIC TO BE TYPE III ALUMINUM ALLOY WIRE ASTM B-211, ALLOY 6061-T89 OR T94.
4. BRACE RAIL AND BRACE ENDS, POST TOPS, TURNBUCKLES, TRUSS RODS, GATE HINGES AND LATCHES, STRETCHER BARS, AND BAR BANDS IN ACCORDANCE WITH AASHTO M181.
5. STAINLESS STEEL BOLTS, NUTS, AND ANCHOR RODS TO BE ASTM A-276, TYPE 304 STAINLESS STEEL WASHERS TO BE ASTM A-276, TYPE 302. ANCHOR ROD THREADS SHALL BE ROLLED, NOT CUT.
6. POST TO BE SET PERPENDICULAR TO TOP OF CURB AND RAILS SHALL BE PLACED PARALLEL TO THE GRADE OF THE BRIDGE.
7. BOTTOM OF BASE PLATE SHALL BE THOROUGHLY COATED WITH ALUMINUM IMPREGNATED CAULKING COMPOUND OR APPROVED QUALITY.
8. CERTIFIED MILL REPORTS ARE REQUIRED FOR POST, RAIL, AND FENCE FABRIC. SHOP INSPECTION IS NOT REQUIRED.
9. AFTER ANCHOR BOLT AND OTHER BOLT NUTS HAVE BEEN TIGHTENED, THREADS SHALL BE NICKED TO LOCK NUTS.
10. THE ALUMINUM BRACE BANDS USED TO SECURE HANDRAIL SLEEVE SHALL BE OF SUCH SIZE NECESSARY TO CLAMP TIGHTLY TO FENCE POST.
11. WELDING SHALL BE IN ACCORDANCE WITH THE CURRENT AWS STRUCTURAL WELDING CODE - ALUMINUM.
12. ANCHOR PLATE SHALL BE STEEL CONFORMING TO ASTM SPECIFICATION A36.
13. UPPER ANCHOR ROD NUTS SHALL BE HEAVY HEX NUTS, PER ASTM A276 TYPE 302 OR 304 STAINLESS STEEL.
14. LOWER ANCHOR ROD NUTS SHALL BE HEAVY HEX NUTS, PER ASTM A563.
15. FOR HANDRAIL AND FENCE, SEE SPECIAL PROVISIONS.
16. THE CONTRACTOR SHALL SUBMIT SHOP DRAWINGS TO THE ENGINEER FOR REVIEW AND APPROVAL. SEE SUBMITTAL OF WORKING DRAWINGS SPECIAL PROVISIONS FOR DETAILS.

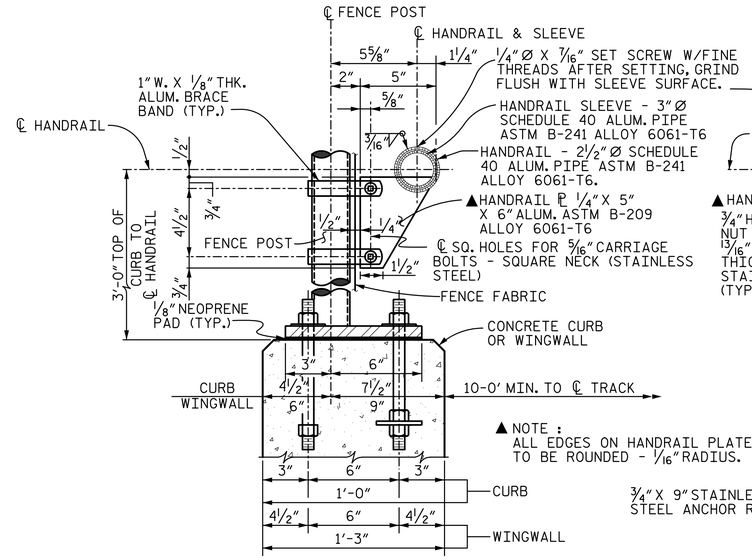

SECTION

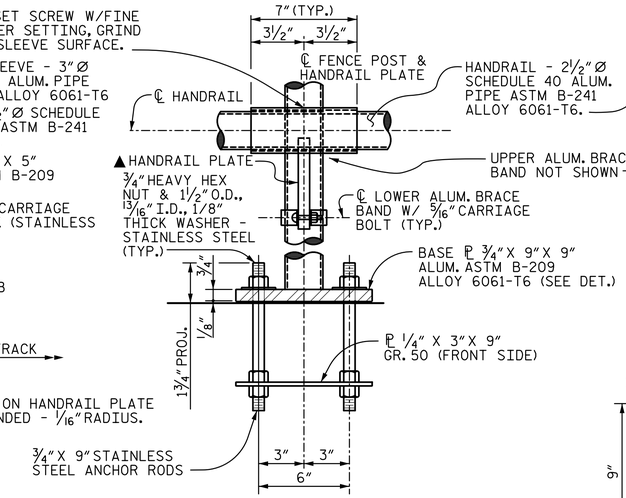

FRONT VIEW

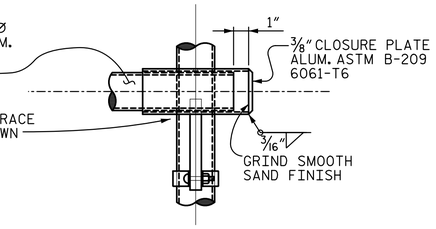

END CLOSURE DETAIL
(AT END FENCE POSTS)

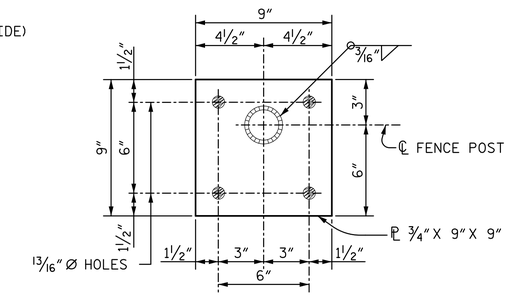

BASE PLATE DETAIL

DETAILS FOR PIPE RAILING

NOT TO SCALE

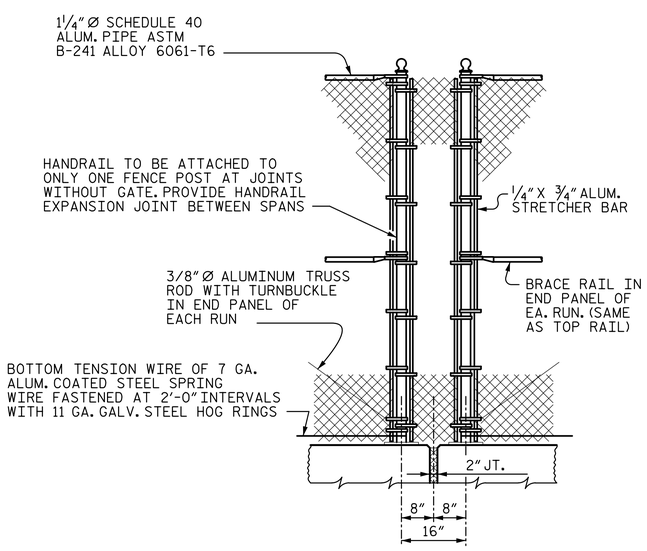

DETAIL AT DECK JOINT

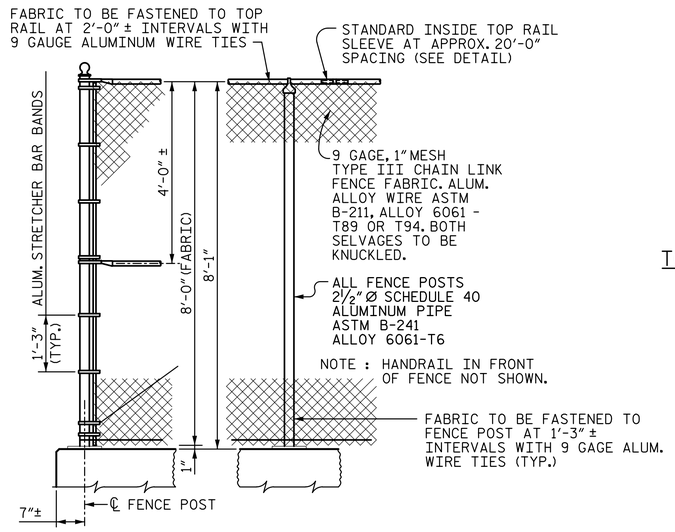

DETAIL AT END

DETAILS FOR CHAIN LINK FENCE

NOT TO SCALE

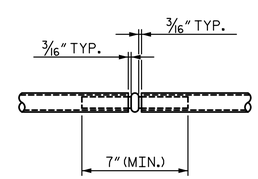

TOP RAIL SLEEVE DETAIL

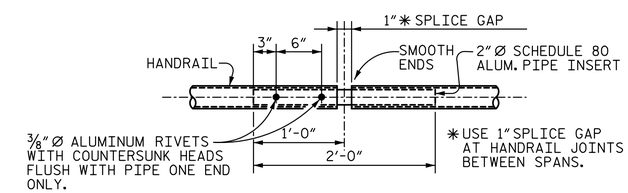

HANDRAIL JOINT DETAIL

PROJECT NO. U-3308

DURHAM COUNTY

STATION: POT 24+09.63 -LALT-
POT 21+11.43 -NSN-

SHEET 2 OF 2

DocuSigned by: Paul Kelly Jr.
26ADE85DEC6A498...

NORTH CAROLINA PROFESSIONAL SEAL 19765 ENGINEER PAUL E. KELLY, JR.
3/31/2015

STATE OF NORTH CAROLINA
DEPARTMENT OF TRANSPORTATION
RALEIGH

HANDRAIL AND FENCE DETAILS

REVISIONS								SHEET NO.
NO.	BY:	DATE:	NO.	BY:	DATE:			S3-24
1			3					TOTAL SHEETS
2			4					44

DOCUMENT NOT CONSIDERED FINAL UNLESS ALL SIGNATURES COMPLETED

STV / Ralph Whitehead Associates, Inc.
900 W Trade Street, Suite 715
Charlotte, NC 28202
NC License No. F-0991

DRAWN BY : KPL DATE : 06-14
CHECKED BY : DJM DATE : 06-14

alveygc 3/30/2015 1:40:18 PM I:\PROJ\25325\ustation\struct\Final\403_024_U3308_SMU_HRFD02.dgn

REINFORCING BAR SCHEDULE

SPAN A						SPAN B						SPAN C						SPAN D					
MARK	NO.	SIZE	TYPE	LENGTH (FT. IN.)	WEIGHT (LB.)	MARK	NO.	SIZE	TYPE	LENGTH (FT. IN.)	WEIGHT (LB.)	MARK	NO.	SIZE	TYPE	LENGTH (FT. IN.)	WEIGHT (LB.)	MARK	NO.	SIZE	TYPE	LENGTH (FT. IN.)	WEIGHT (LB.)
A1	52	#5	STR.	50'-3"	2,725	A1	78	#5	STR.	50'-3"	4,088	A1	78	#5	STR.	50'-3"	4,088	A1	52	#5	STR.	50'-3"	2,725
A2	16	#5	STR.	50'-8"	846	A2	16	#5	STR.	50'-8"	846	A2	16	#5	STR.	50'-8"	846	A2	16	#5	STR.	50'-8"	846
A3	4	#5	STR.	43'-5"	181	A3	4	#5	STR.	43'-5"	181	A3	4	#5	STR.	43'-5"	181	A3	4	#5	STR.	43'-5"	181
A4	4	#5	STR.	35'-11"	150	A4	4	#5	STR.	35'-11"	150	A4	4	#5	STR.	35'-11"	150	A4	4	#5	STR.	35'-11"	150
A5	4	#5	STR.	28'-5"	119	A5	4	#5	STR.	28'-5"	119	A5	4	#5	STR.	28'-5"	119	A5	4	#5	STR.	28'-5"	119
A6	4	#5	STR.	20'-11"	87	A6	4	#5	STR.	20'-11"	87	A6	4	#5	STR.	20'-11"	87	A6	4	#5	STR.	20'-11"	87
A7	4	#5	STR.	13'-5"	56	A7	4	#5	STR.	13'-5"	56	A7	4	#5	STR.	13'-5"	56	A7	4	#5	STR.	13'-5"	56
A8	4	#5	STR.	5'-11"	25	A8	4	#5	STR.	5'-11"	25	A8	4	#5	STR.	5'-11"	25	A8	4	#5	STR.	5'-11"	25
B1	102	#5	STR.	34'-1"	3,626	B1	102	#5	STR.	47'-0"	5,000	B1	102	#5	STR.	47'-0"	5,000	B1	102	#5	STR.	34'-1"	3,626
B2	36	#5	STR.	11'-0"	413	B2	48	#5	STR.	11'-5"	572	B2	48	#5	STR.	11'-5"	572	B2	36	#5	STR.	11'-0"	413
S1	72	#5	1	6'-5"	482	S1	104	#5	1	6'-5"	696	S1	104	#5	1	6'-5"	696	S1	72	#5	1	6'-5"	482

BAR TYPES

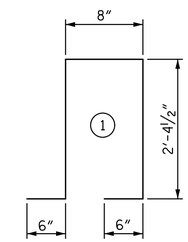

ALL BAR DIMENSIONS ARE OUT TO OUT.

SUPERSTRUCTURE BILL OF MATERIAL

	CAST-IN-PLACE 5000 PSI CONCRETE		EPOXY COATED REINFORCING STEEL
	(C.Y.)		(LB)
	DECK SLAB	CURB	
SPAN "A"	59.3	5.1	8,710
SPAN "B"	81.3	7.0	11,820
SPAN "C"	81.3	7.0	11,820
SPAN "D"	59.3	5.1	8,710
TOTALS	281.2	24.2	41,060

SUPERSTRUCTURE REINFORCING STEEL LENGTHS ARE BASED ON THE FOLLOWING MINIMUM SPLICE LENGTHS

BAR SIZE	SUPERSTRUCTURE EXCEPT APPROACH SLABS, PARAPET, AND BARRIER RAIL		APPROACH SLABS		PARAPET AND BARRIER RAIL
	EPOXY COATED	UNCOATED	EPOXY COATED	UNCOATED	
#4	2'-0"	1'-9"	2'-0"	1'-9"	2'-9"
#5	2'-6"	2'-2"	2'-6"	2'-2"	3'-5"
#6	3'-0"	2'-7"	3'-10"	2'-7"	4'-4"
#7	5'-3"	3'-6"			
#8	6'-10"	4'-7"			

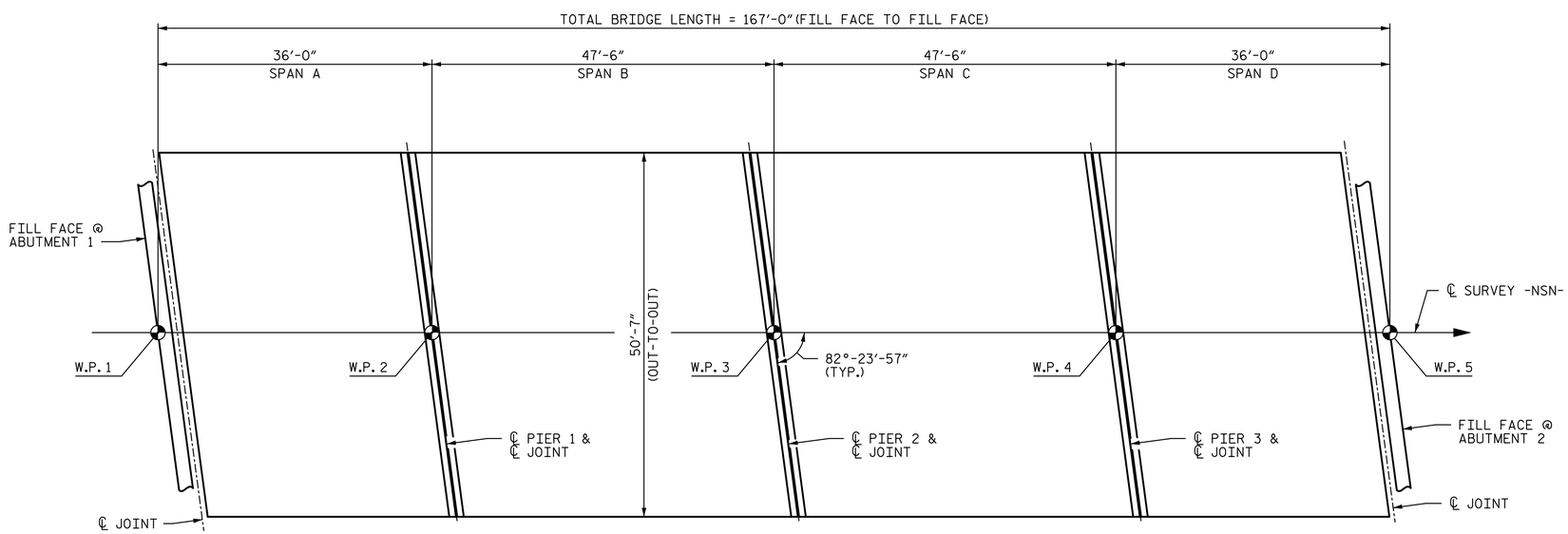

LAYOUT FOR COMPUTING AREA OF REINFORCED CONCRETE DECK SLAB
(SQ. FT. = 8,278)

PROJECT NO. U-3308
DURHAM COUNTY
STATION: POT 24+09.63 -LALT-
POT 21+11.43 -NSN-

DocuSigned by: Paul Kelly Jr
26ADE85DEC6A498...

NORTH CAROLINA PROFESSIONAL SEAL 19765 ENGINEER PAUL E. KELLY, JR.
3/31/2015

STATE OF NORTH CAROLINA
DEPARTMENT OF TRANSPORTATION
RALEIGH

SUPERSTRUCTURE BILL OF MATERIALS

DRAWN BY : MTC DATE : 06-14
CHECKED BY : DJM DATE : 06-14

DOCUMENT NOT CONSIDERED FINAL UNLESS ALL SIGNATURES COMPLETED

STV / Ralph Whitehead Associates, Inc.
900 W Trade Street, Suite 715
Charlotte, NC 28202
NC License No. F-0991

REVISIONS

NO.	BY:	DATE:	NO.	BY:	DATE:
1			3		
2			4		

SHEET NO. S3-25
TOTAL SHEETS 44

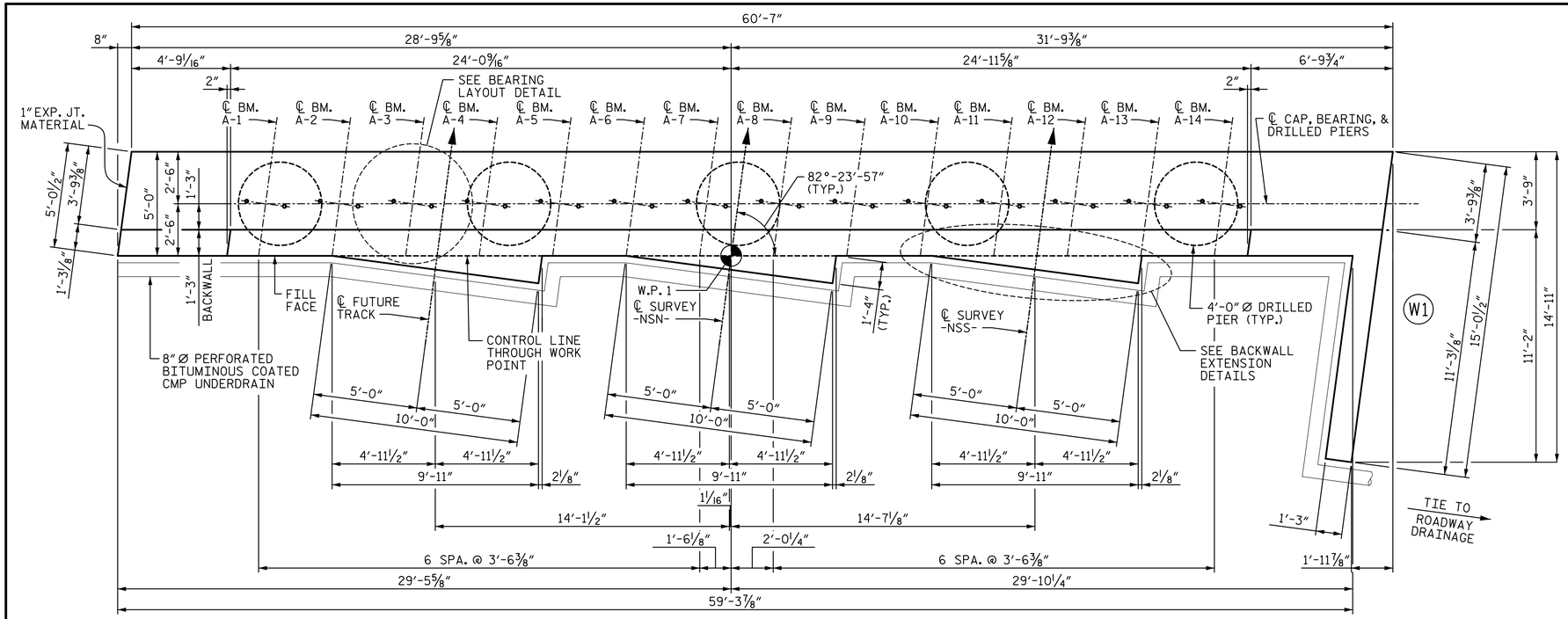

PLAN

NOTE:
INVERT ALTERNATE PAIRS OF S1 STIRRUPS.

● ALTERNATE ADJACENT BARS

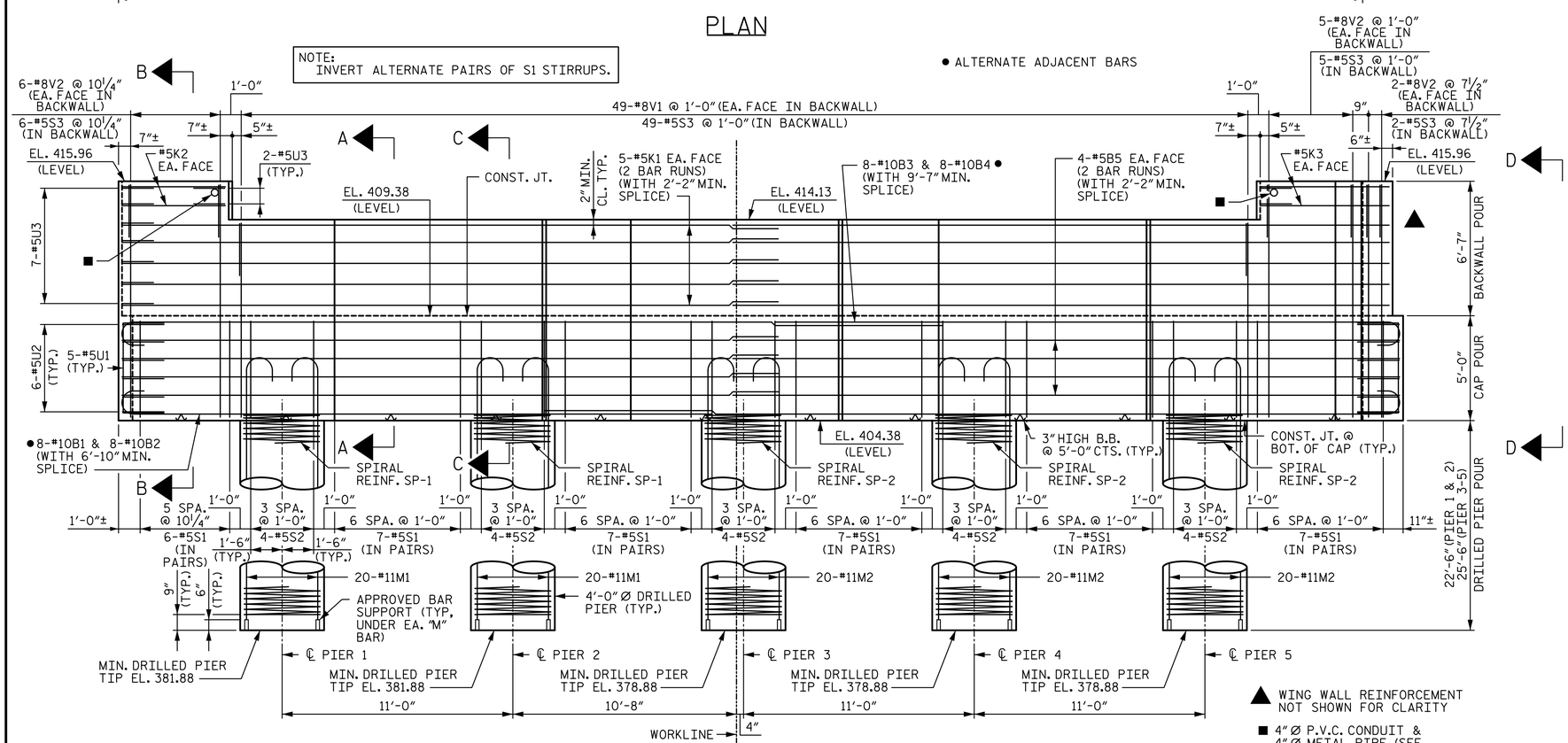

ELEVATION

▲ WING WALL REINFORCEMENT NOT SHOWN FOR CLARITY

■ 4" Ø P.V.C. CONDUIT & 4" Ø METAL PIPE (SEE "DECK JOINT DETAILS" SHEET FOR DETAILS)

NOTES:

1. FOR EPOXY PROTECTIVE COATING, SEE STANDARD SPECIFICATIONS.
2. BACKWALL SHALL BE PLACED BEFORE APPLYING THE EPOXY PROTECTIVE COATING.
3. THE TOP SURFACE AREAS OF THE CAP SHALL BE CURED IN ACCORDANCE WITH THE STANDARD SPECIFICATIONS EXCEPT THAT THE MEMBRANE CURING COMPOUND METHOD SHALL NOT BE USED.
4. STIRRUPS AND "U" BARS IN CAP MAY BE SHIFTED AS NECESSARY TO CLEAR ANCHOR BOLTS.
5. HOOKS ON BARS MAY BE TURNED AS NECESSARY FOR PLACING REINFORCING STEEL.
6. SEE SHEET 5 OF 5 FOR BEARING LAYOUT DETAIL AND SHEET 2 OF 5 FOR ANCHOR BLOCK OUT DETAIL.
7. SEE SHEET 3 OF 5 FOR BACKWALL EXTENSION DETAILS.
8. FOR SECTIONS AND VIEWS, SEE SHEETS 2 OF 5 AND 3 OF 5.
9. FOR WING WALL DETAILS, SEE SHEET 4 OF 5.
10. THE CONTRACTOR'S ATTENTION IS CALLED TO THE FACT THAT THE LONGITUDINAL REINFORCEMENT FOR THE DRILLED PIERS IS DETAILED WITH 3 FEET OF EXTRA LENGTH.
11. SPLICING OF THE LONGITUDINAL BARS IN THE DRILLED PIERS WILL NOT BE PERMITTED.
12. FOR BEARINGS AND ANCHOR BOLTS, SEE THE "BEARING DETAILS" SHEET.
13. FOR OTHER NOTES, SEE "FOUNDATION LAYOUT" SHEET.
14. SEE DETAIL "A" ON SHEET TITLED "DECK JOINT DETAILS", FOR LOCATION OF WATERSTOP TO BE INSTALLED IN THE BACKWALL.
15. FOR DAMPPROOFING, SEE "NS SPECIFICATION FOR CAST-IN-PLACE CONCRETE" SPECIAL PROVISION AND GENERAL NOTES ON GENERAL DRAWING SHEET 4 OF 4.

PROJECT NO. U-3308
DURHAM COUNTY
STATION: POT 24+09.63 -LALT-
POT 21+11.43 -NSN-

SHEET 1 OF 5

STATE OF NORTH CAROLINA
DEPARTMENT OF TRANSPORTATION
RALEIGH

ABUTMENT 1

DocuSigned by: Paul Kelly Jr. 26ADE85DEC6A408...

NORTH CAROLINA PROFESSIONAL SEAL 19765 ENGINEER PAUL E. KELLY, JR.
12/11/2015

DRAWN BY : TJT DATE : 06-14
CHECKED BY : DJM DATE : 06-14

DOCUMENT NOT CONSIDERED FINAL UNLESS ALL SIGNATURES COMPLETED

STV / Ralph Whitehead Associates, Inc.
900 W Trade Street, Suite 715
Charlotte, NC 28202
NC License No. F-0991

REVISIONS								SHEET NO.
NO.	BY:	DATE:	NO.	BY:	DATE:			S3-26
1			3					TOTAL SHEETS
2			4					44

N:\PROJ\251325\Ustation\struct\Final\403_026_U3308_SMU_AB01.dgn 12/3/2015 9:53:48 AM chitkhmb

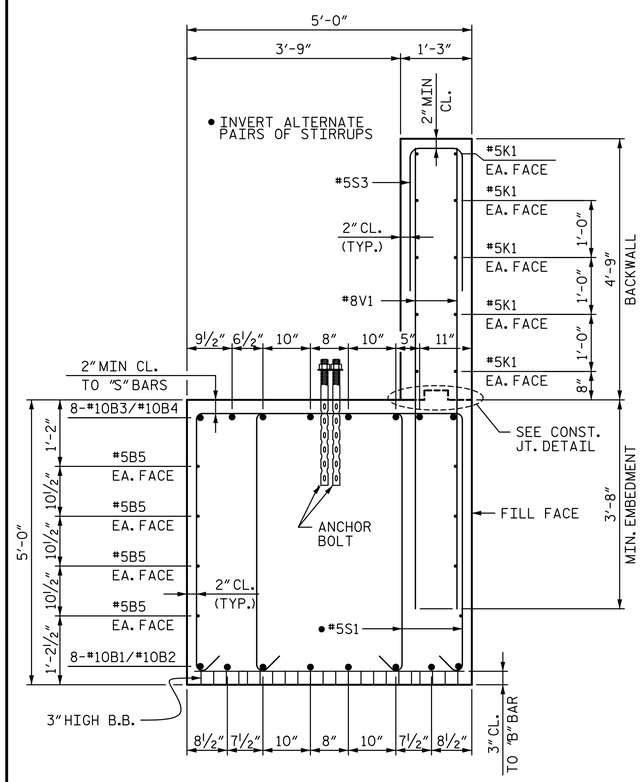

SECTION A-A

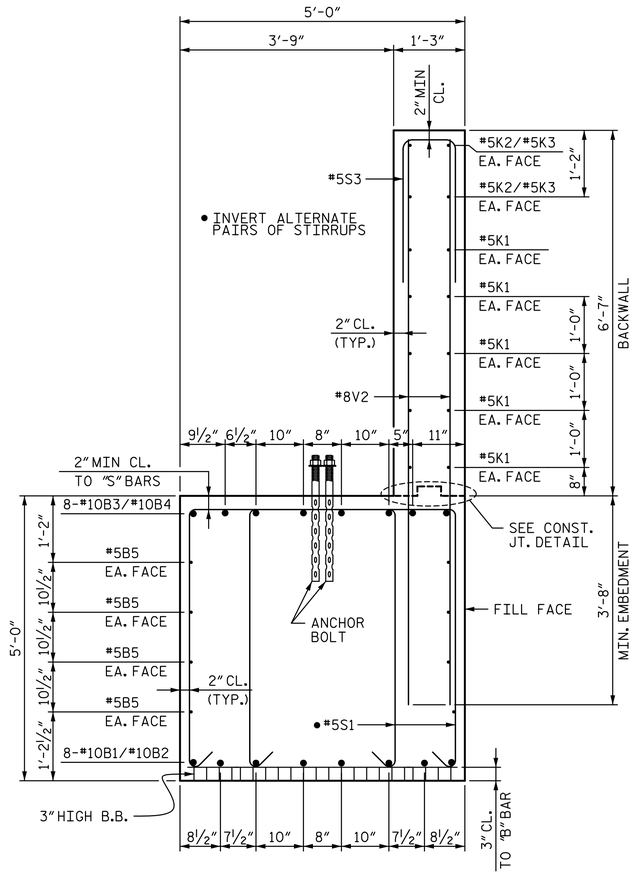

SECTION B-B

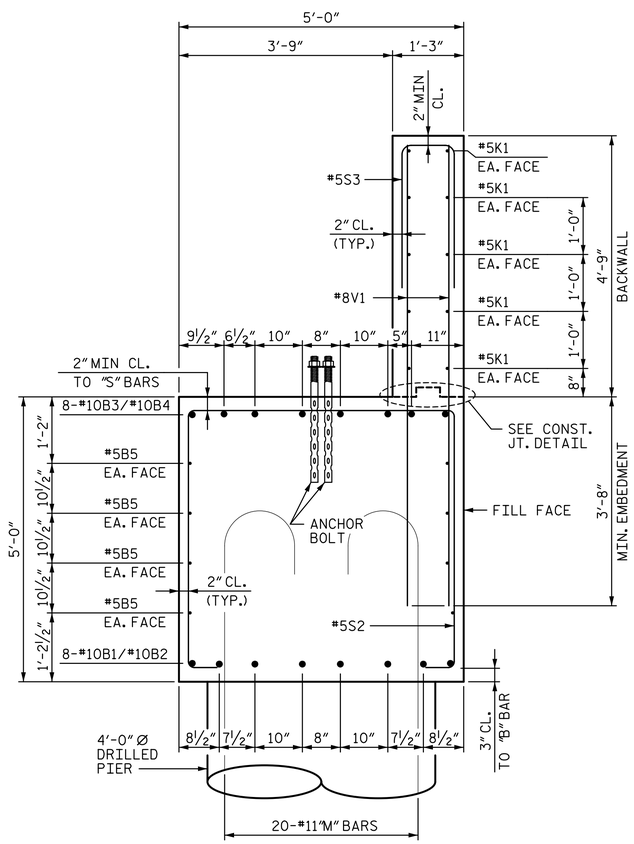

SECTION C-C
(SPIRAL NOT SHOWN FOR CLARITY)

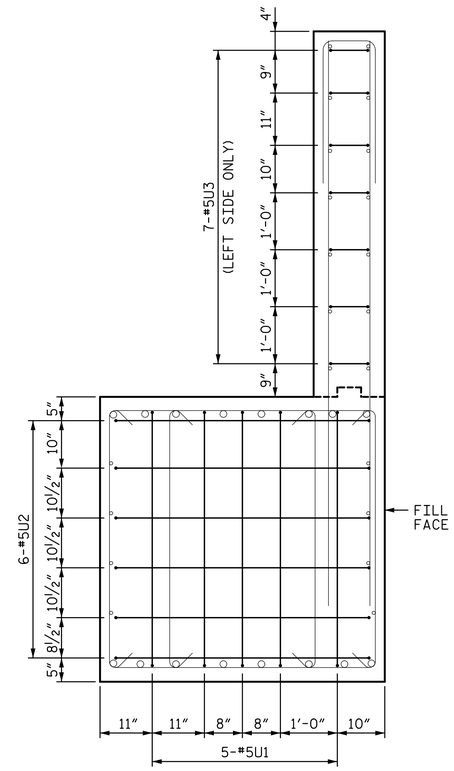

VIEW D-D

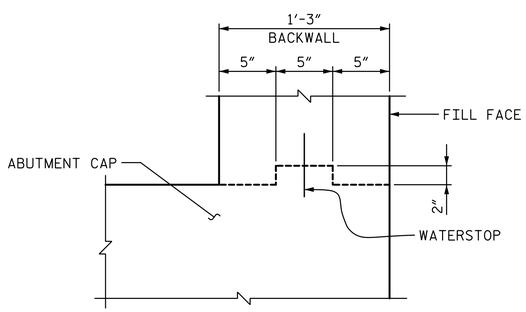

CONSTRUCTION JOINT DETAIL

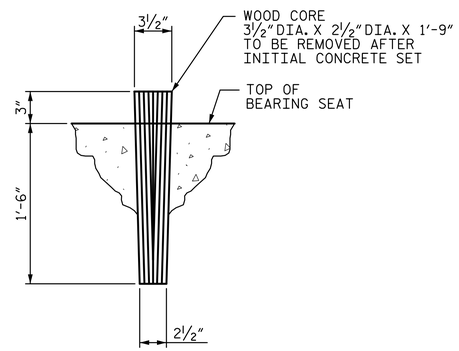

ANCHOR BLOCK OUT DETAIL

*IF FREEZING WEATHER IS ENCOUNTERED FILL HOLES WITH ANTIFREEZE AND SAWDUST.

PROJECT NO. U-3308
DURHAM COUNTY
STATION: POT 24+09.63 -LALT-
POT 21+11.43 -NSN-

SHEET 2 OF 5

STATE OF NORTH CAROLINA
DEPARTMENT OF TRANSPORTATION
RALEIGH

ABUTMENT 1

DocuSigned by: Paul Kelly Jr. 26ADE85DEC6A498...

NORTH CAROLINA PROFESSIONAL SEAL 19765 ENGINEER PAUL E. KELLY, JR.
3/31/2015

REVISIONS						
NO.	BY:	DATE:	NO.	BY:	DATE:	
1			3			
2			4			

SHEET NO. S3-27
TOTAL SHEETS 44

DRAWN BY : TJT DATE : 06-14
CHECKED BY : DJM DATE : 06-14

DOCUMENT NOT CONSIDERED FINAL UNLESS ALL SIGNATURES COMPLETED

STV / Ralph Whitehead Associates, Inc.
900 W Trade Street, Suite 715
Charlotte, NC 28202
NC License No. F-0991

alveyac 3/30/2015 1:40:19 PM I:\PROJ\25I325I\ustation\struct\Final\403_027_U3308_SMU_ABI02.dgn

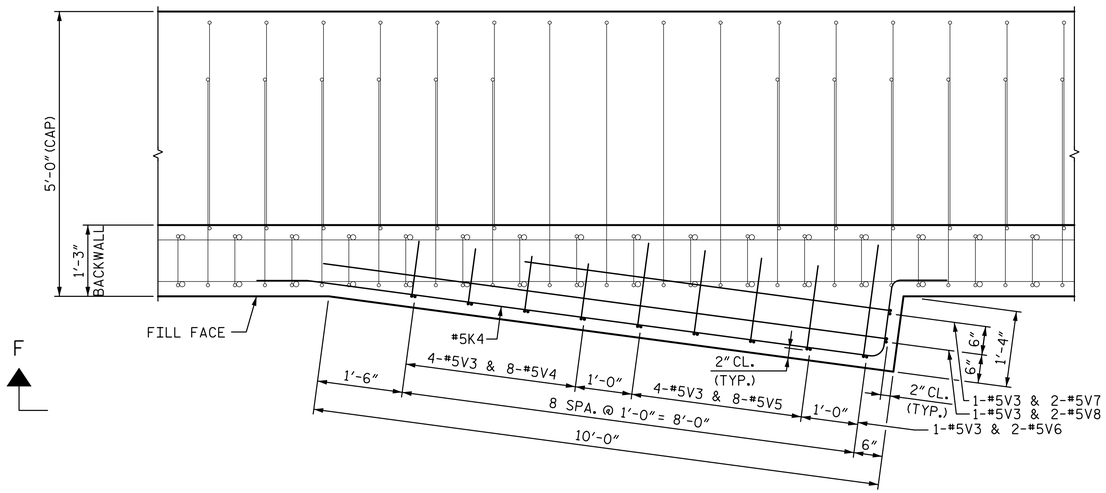

PLAN - TYPICAL BACKWALL EXTENSION DETAIL

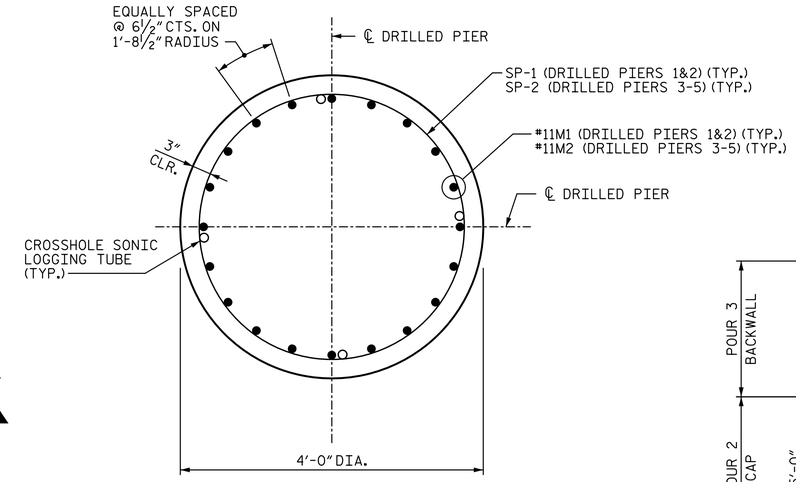

TYPICAL SECTION THROUGH DRILLED PIER

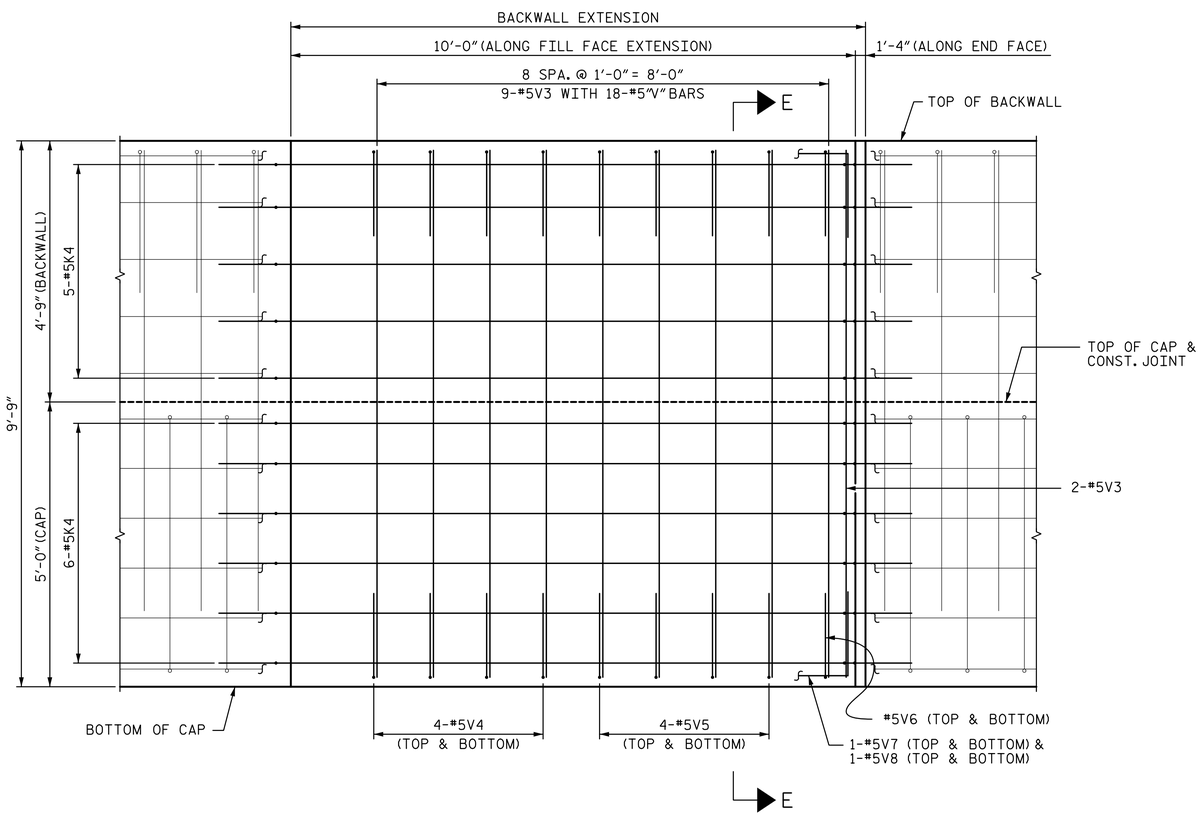

VIEW F-F - TYPICAL BACKWALL EXTENSION DETAIL

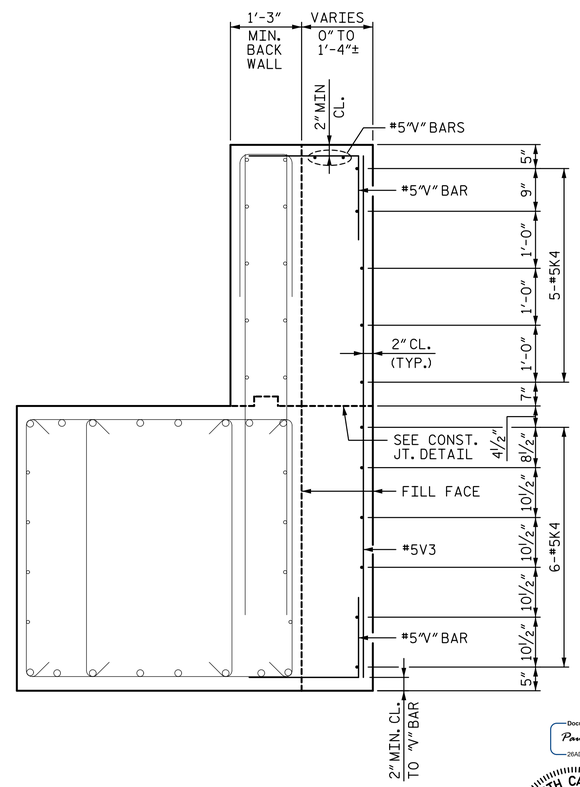

SECTION E-E

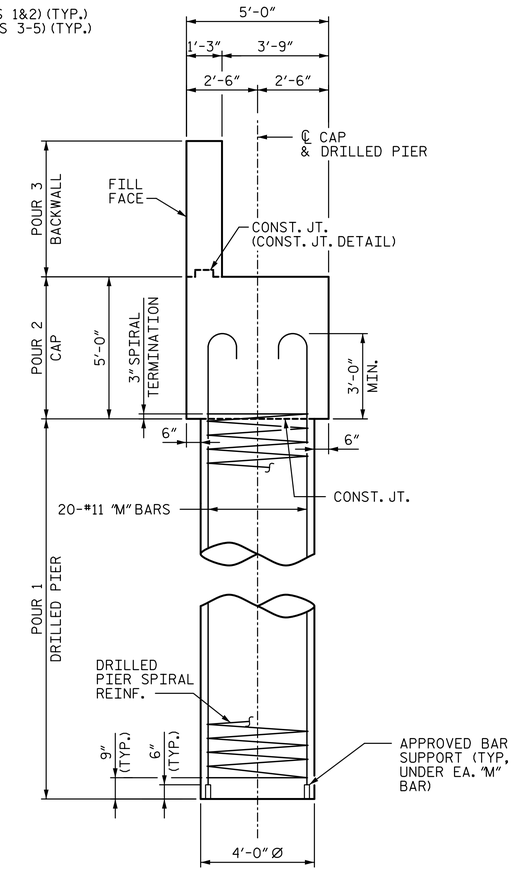

SECTION AT DRILLED PIER

(CAP REINFORCEMENT NOT SHOWN FOR CLARITY)

PROJECT NO. U-3308

DURHAM COUNTY

STATION: POT 24+09.63 -LALT-
POT 21+11.43 -NSN-

SHEET 3 OF 5

STATE OF NORTH CAROLINA
DEPARTMENT OF TRANSPORTATION
RALEIGH

ABUTMENT 1

DocuSigned by: Paul Kelly Jr. 26ADE85DEC6A498...

NORTH CAROLINA PROFESSIONAL SEAL 19765 ENGINEER PAUL E. KELLY, JR.

3/31/2015

DOCUMENT NOT CONSIDERED FINAL UNLESS ALL SIGNATURES COMPLETED

STV / Ralph Whitehead Associates, Inc.
900 W Trade Street, Suite 715
Charlotte, NC 28202
NC License No. F-0991

REVISIONS						SHEET NO.
NO.	BY:	DATE:	NO.	BY:	DATE:	S3-28
1			3			TOTAL SHEETS
2			4			44

DRAWN BY : TJT DATE : 06-14
CHECKED BY : DJM DATE : 06-14

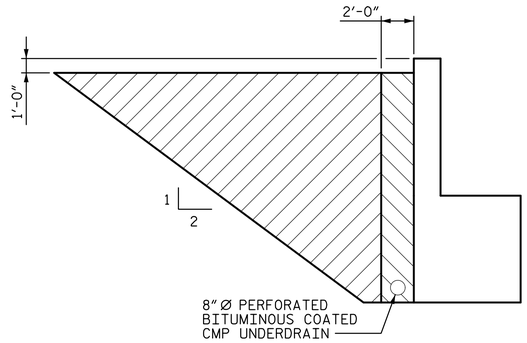

UNDERDRAIN DETAIL

STRUCTURE BACKFILL

POROUS BACKFILL

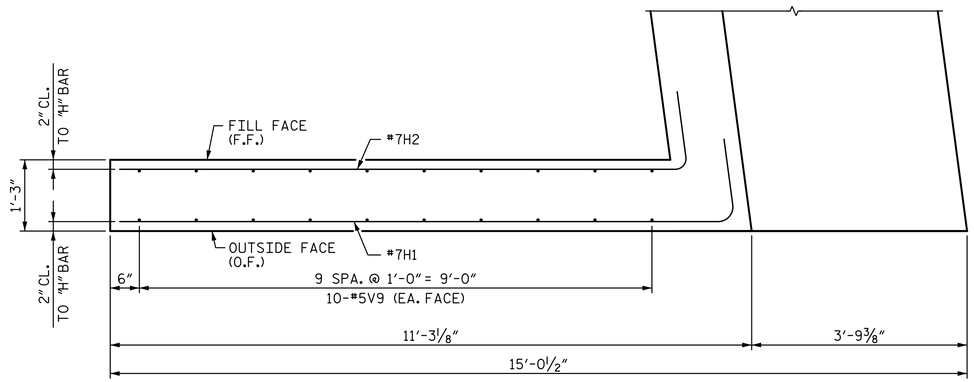

PLAN (W1)

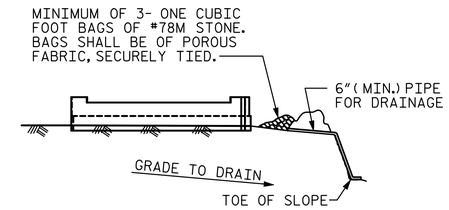

BAGGED STONE AND PIPE SHALL BE PLACED IMMEDIATELY AFTER COMPLETION OF END BENT EXCAVATION. PIPE MAY BE EITHER CONCRETE, CORRUGATED STEEL, CORRUGATED ALUMINUM ALLOY, OR CORRUGATED PLASTIC. PERFORATED PIPE WILL NOT BE ALLOWED.

BAGGED STONE SHALL REMAIN IN PLACE UNTIL THE ENGINEER DIRECTS THAT IT BE REMOVED. THE CONTRACTOR SHALL REMOVE AND DISPOSE OF SILT ACCUMULATIONS AT BAGGED STONE WHEN SO DIRECTED BY THE ENGINEER. BAGS SHALL BE REMOVED AND REPLACED WHENEVER THE ENGINEER DETERMINES THAT THEY HAVE DETERIORATED AND LOST THEIR EFFECTIVENESS.

NO SEPARATE PAYMENT WILL BE MADE FOR THIS WORK AND THE ENTIRE COST OF THIS WORK SHALL BE INCLUDED IN THE UNIT CONTRACT PRICE BID FOR THE SEVERAL PAY ITEMS.

TEMPORARY DRAINAGE AT END BENT

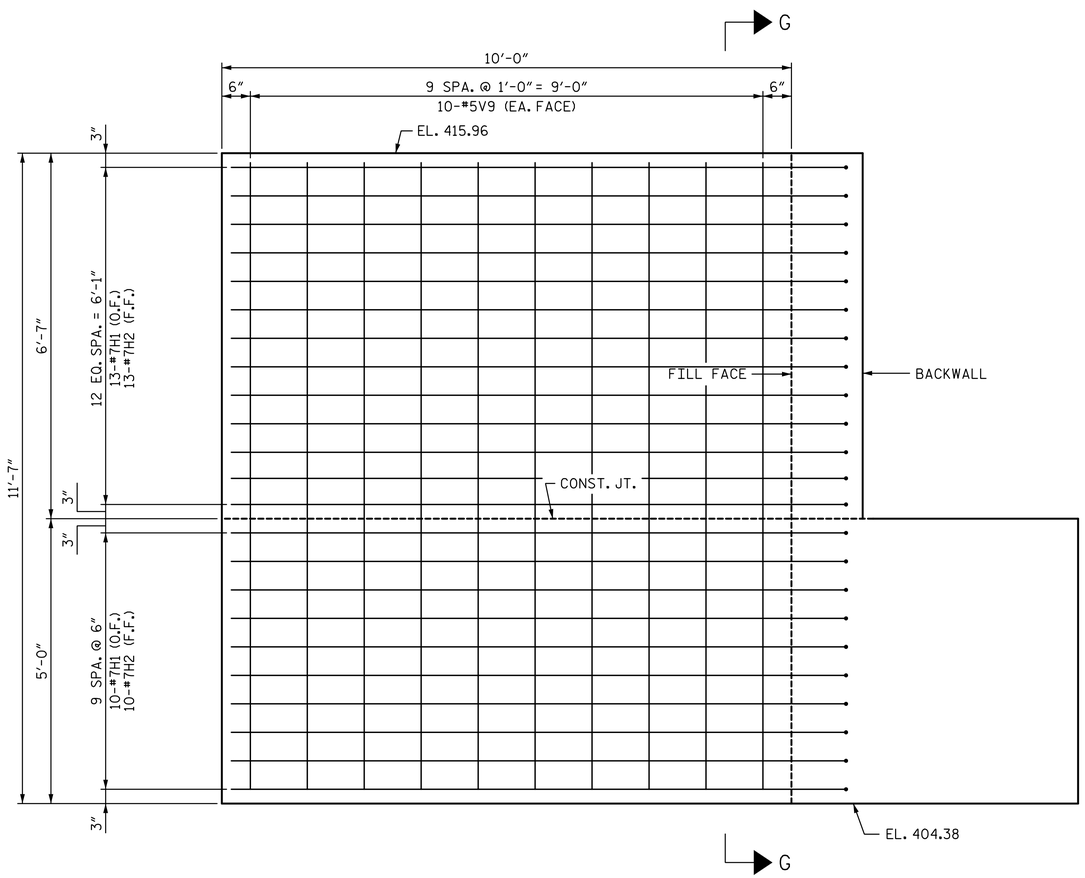

ELEVATION (W1)

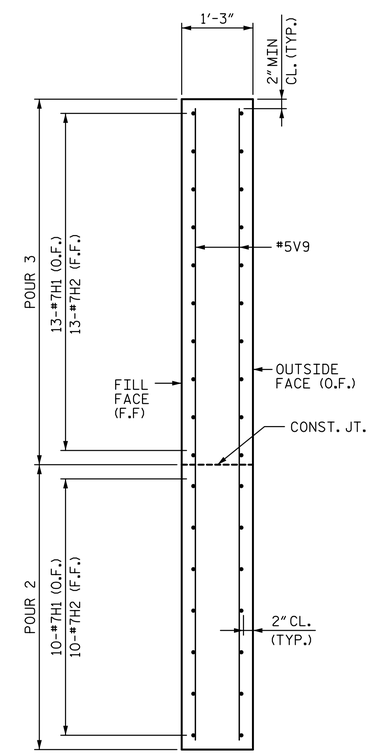

SECTION G-G

DocuSigned by: Paul Kelly Jr 26ADE85DEC6A498...

NORTH CAROLINA PROFESSIONAL SEAL 19765 ENGINEER PAUL E. KELLY JR. 3/31/2015

PROJECT NO. U-3308

DURHAM COUNTY

STATION: POT 24+09.63 -LALT-
POT 21+11.43 -NSN-

SHEET 4 OF 5

STATE OF NORTH CAROLINA
DEPARTMENT OF TRANSPORTATION
RALEIGH

ABUTMENT 1

REVISIONS						SHEET NO.
NO.	BY:	DATE:	NO.	BY:	DATE:	S3-29
1			3			TOTAL SHEETS
2			4			44

DRAWN BY : TJT DATE : 06-14
CHECKED BY : DJM DATE : 06-14

DOCUMENT NOT CONSIDERED FINAL UNLESS ALL SIGNATURES COMPLETED

STV / Ralph Whitehead Associates, Inc.
900 W Trade Street, Suite 715
Charlotte, NC 28202
NC License No. F-0991

REINFORCING BAR SCHEDULE

ABUTMENT 1

MARK	NO.	SIZE	TYPE	LENGTH (FT. IN.)	WEIGHT (LB.)
B1	8	10	1	48′-6″	1,670
B2	8	10	1	21′-5″	737
B3	8	10	1	52′-9″	1,816
B4	8	10	1	19′-11″	686
B5	16	5	STR.	31′-3″	522
H1	23	7	8	12′-2″	572
H2	23	7	8	11′-5″	537
K1	20	5	STR.	31′-3″	652
K2	4	5	STR.	4′-11″	21
K3	4	5	STR.	5′-11″	25
K4	33	5	5	13′-6″	465
M1	40	11	1	29′-7″	6,287
M2	60	11	1	32′-7″	10,387
S1	82	5	2	13′-10″	1,183
S2	20	5	3	14′-11″	311
S3	62	5	4	5′-11″	383
U1	10	5	4	7′-6″	78
U2	12	5	6	7′-6″	94
U3	11	5	4	3′-9″	43
V1	98	8	STR.	8′-3″	2,159
V2	26	8	STR.	10′-1″	700
V3	33	5	STR.	9′-4″	321
V4	24	5	9	2′-6″	63
V5	24	5	9	3′-0″	75
V6	6	5	9	3′-6″	22
V7	6	5	9	8′-0″	50
V8	6	5	9	11′-6″	72
V9	20	5	STR.	11′-2″	233
SP-1	2	*	7	986′-0″	2,057
SP-2	3	*	7	1116′-0″	3,492
REINFORCING STEEL				LBS.	30,164
SPIRAL REINFORCING STEEL				LBS.	5,549

THE CONTRACTOR'S ATTENTION IS CALLED TO THE FACT THAT THE LONGITUDINAL REINFORCEMENT FOR DRILLED PIERS IS DETAILED WITH 3 FEET OF EXTRA LENGTH.

* THE SP-1 AND SP-2 SPIRAL REINFORCEMENT STEEL SHALL BE #5 PLAIN OR DEFORMED BAR WITH A 3″PITCH.

BAR TYPES

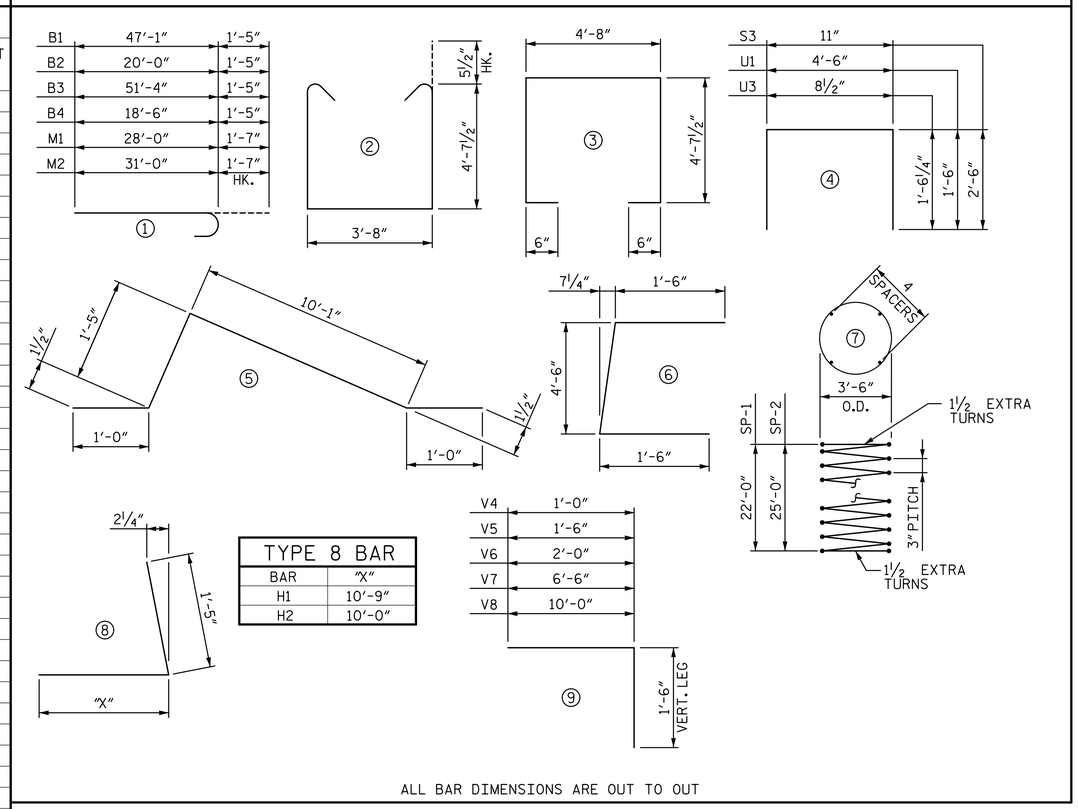

TYPE 8 BAR	
BAR	"X"
H1	10′-9″
H2	10′-0″

ALL BAR DIMENSIONS ARE OUT TO OUT

QUANTITIES

			ABUT. 1
REINFORCING STEEL		LBS.	30,164
SPIRAL REINFORCING STEEL		LBS.	5,549
C.I.P. CONCRETE :	POUR 2 - CAP & LOWER WING WALL	CU. YDS.	62.2
	POUR 3 - BACKWALL & UPPER WING WALL	CU. YDS.	20.8
	TOTAL	CU. YDS.	83.0
4′-0″ Ø DRILLED PIERS IN SOIL		L.F.	86.5
4′-0″ Ø DRILLED PIERS NOT IN SOIL		L.F.	35.0
TOTAL 4′-0″ Ø DRILLED PIERS		L.F.	121.5
DRILLED PIER CONCRETE : POUR 1		CU. YDS.	56.5
CSL TUBES		L.F.	516.0
SPT TESTING		EA.	5

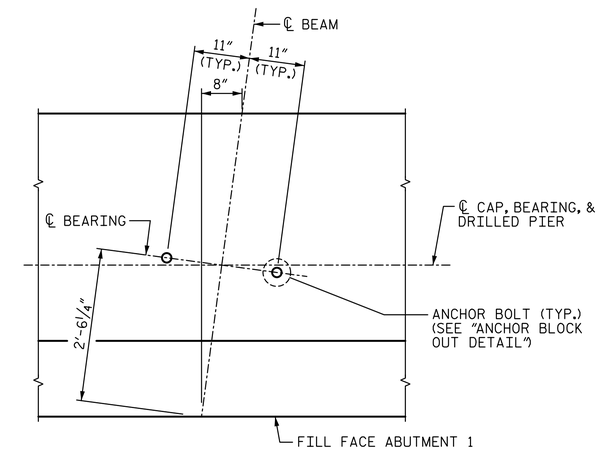

BEARING LAYOUT DETAIL

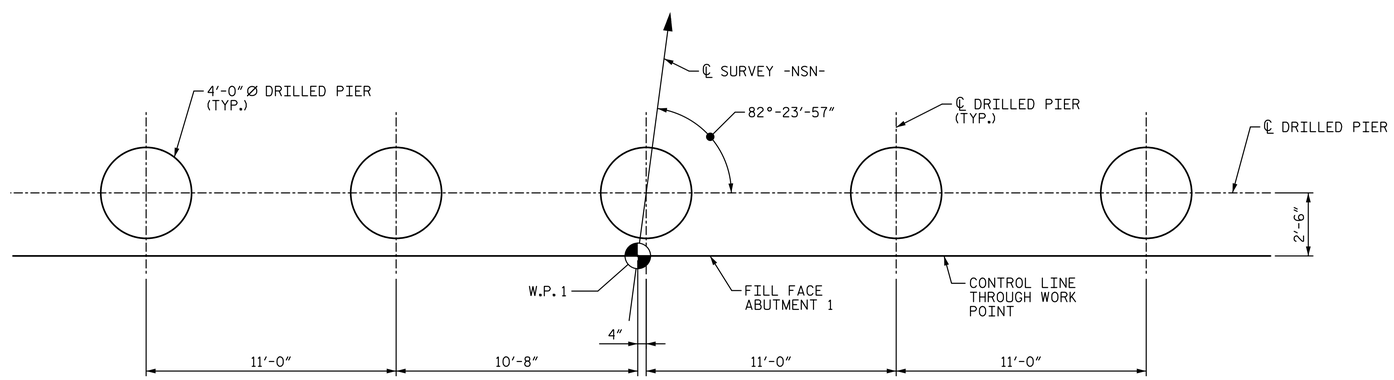

PLAN OF DRILLED PIERS

PROJECT NO. U-3308
DURHAM COUNTY
STATION: POT 24+09.63 -LALT-
POT 21+11.43 -NSN-

SHEET 5 OF 5

STATE OF NORTH CAROLINA
DEPARTMENT OF TRANSPORTATION
RALEIGH

ABUTMENT 1

DocuSigned by: Paul Kelly Jr
26ADE85DEC6A498...

NORTH CAROLINA PROFESSIONAL SEAL 19765 ENGINEER PAUL E. KELLY, JR.
3/31/2015

DOCUMENT NOT CONSIDERED FINAL UNLESS ALL SIGNATURES COMPLETED

STV / Ralph Whitehead Associates, Inc.
900 W Trade Street, Suite 715
Charlotte, NC 28202
NC License No. F-0991

REVISIONS								SHEET NO.
NO.	BY:	DATE:	NO.	BY:	DATE:			S3-30
1			3					TOTAL SHEETS
2			4					44

DRAWN BY : TJT DATE : 06-14
CHECKED BY : DJM DATE : 06-14

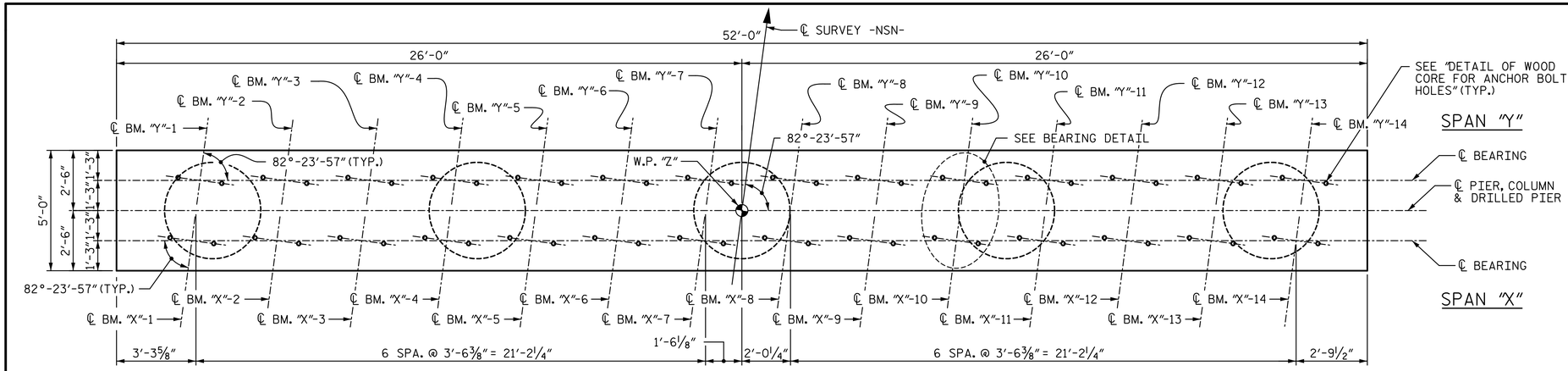

PLAN

(LOOKING UPSTATION)

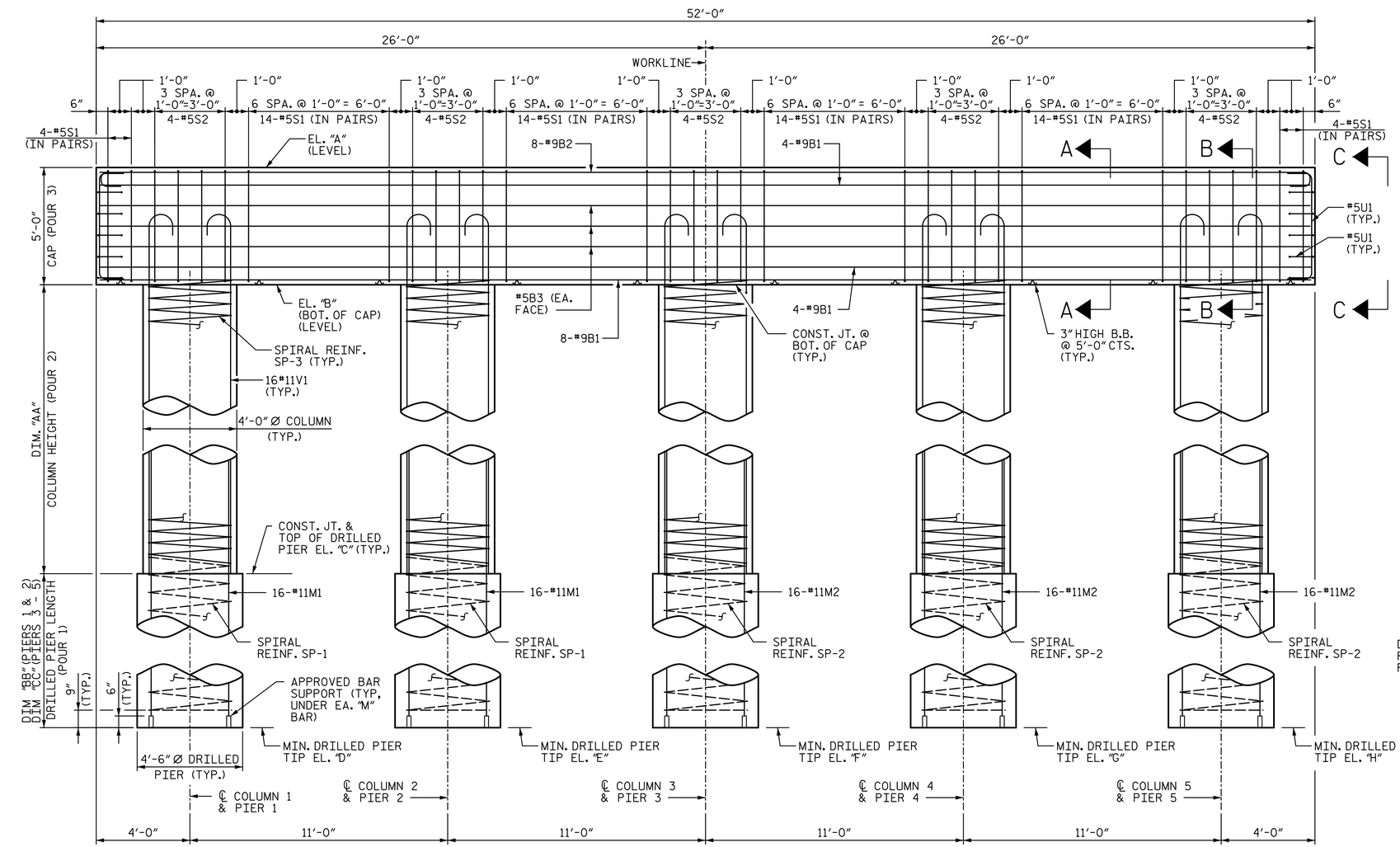

ELEVATION

(LOOKING UPSTATION)

NOTE:
INVERT ALTERNATE PAIRS OF STIRRUPS.

NOTES:

1. FOR EPOXY PROTECTIVE COATING, SEE STANDARD SPECIFICATIONS.
2. STIRRUPS IN CAP MAY BE SHIFTED AS NECESSARY TO CLEAR ANCHOR BOLTS.
3. HOOKS ON "V" BARS MAY BE TURNED AS NECESSARY FOR PLACING REINFORCING STEEL.
4. THE TOP SURFACE AREAS OF THE PIER CAPS SHALL BE CURED IN ACCORDANCE WITH THE STANDARD SPECIFICATIONS EXCEPT THAT THE MEMBRANE CURING COMPOUND METHOD SHALL NOT BE USED.
5. SEE SHEET 3 OF 3 FOR BEARING DETAIL AND DETAIL OF WOOD CORE FOR ANCHOR BOLT HOLES.
6. THE CONTRACTOR'S ATTENTION IS CALLED TO THE FACT THAT THE LONGITUDINAL REINFORCEMENT FOR THE DRILLED PIERS IS DETAILED WITH 3 FEET OF EXTRA LENGTH.
7. SPLICING OF THE LONGITUDINAL BARS IN THE DRILLED PIERS WILL NOT BE PERMITTED.
8. A TWO PART WEATHERPROOFING SYSTEM SHOULD BE APPLIED AROUND THE CONSTRUCTION JOINT AT THE COLUMN AND DRILLED PIER FOR EACH COLUMN.
9. METHOD B DAMPROOFING SHOULD BE APPLIED TO ANY PART OF THE COLUMN THAT IS BELOW THE GROUND LINE.
10. THE LOCATION OF THE CONSTRUCTION JOINT IN THE DRILLED PIERS IS BASED ON AN APPROXIMATE GROUND LINE ELEVATION. IF THE CONSTRUCTION JOINT IS ABOVE THE ACTUAL GROUND LINE ELEVATION, THE CONTRACTOR SHALL PLACE THE CONSTRUCTION JOINT 1 FT BELOW THE GROUND LINE.

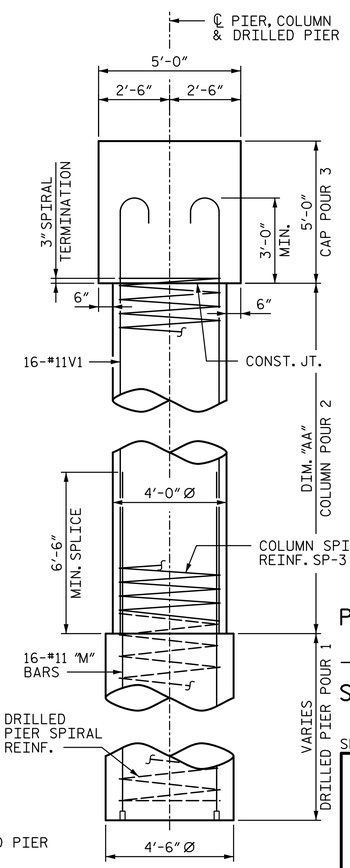

SIDE VIEW

TABLE A
ELEVATIONS & DIMENSIONS

	PIER 1	PIER 2	PIER 3
EL. "A"	409.32	409.19	409.03
EL. "B"	404.32	404.19	404.03
EL. "C"	392.40	392.40	392.40
EL. "D"	380.90	375.90	372.90
EL. "E"	380.90	375.90	372.90
EL. "F"	377.90	364.90	372.90
EL. "G"	377.90	364.90	372.90
EL. "H"	377.90	364.90	372.90
DIM. "AA"	11'-11"	11'-9½"	11'-7½"
DIM. "BB"	11'-6"	16'-6"	19'-6"
DIM "CC"	14'-6"	27'-6"	19'-6"

TABLE B
PLAN VIEW INFORMATION

PIER	1	2	3
X	A	B	C
Y	B	C	D
Z	2	3	4

DocuSigned by: Paul Kelly Jr. 28ADE85DEC6A498...
3/31/2015

NORTH CAROLINA PROFESSIONAL SEAL 19765 ENGINEER PAUL E. KELLY, JR.

PROJECT NO. U-3308
DURHAM COUNTY
STATION: POT 24+09.63 -LALT-
POT 21+11.43 -NSN-

SHEET 1 OF 3

STATE OF NORTH CAROLINA
DEPARTMENT OF TRANSPORTATION
RALEIGH

PIER 1, 2, & 3

DOCUMENT NOT CONSIDERED FINAL UNLESS ALL SIGNATURES COMPLETED

STV / Ralph Whitehead Associates, Inc.
900 W Trade Street, Suite 715
Charlotte, NC 28202
NC License No. F-0991

REVISIONS								SHEET NO.
NO.	BY:	DATE:	NO.	BY:	DATE:			S3-31
1			3					TOTAL SHEETS
2			4					44

DRAWN BY : CLG DATE : 06-14
CHECKED BY : DJM DATE : 06-14

I:\PROJ\25325\ustation\struct\Final\403_03L_U3308_SMU_PI230L.dgn 3/30/2015 1:40:21 PM alveyac

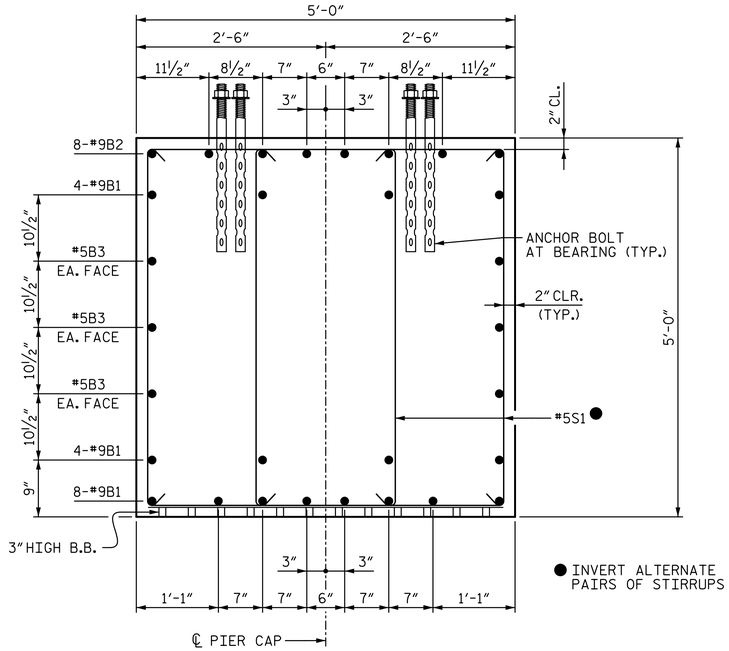

SECTION A-A

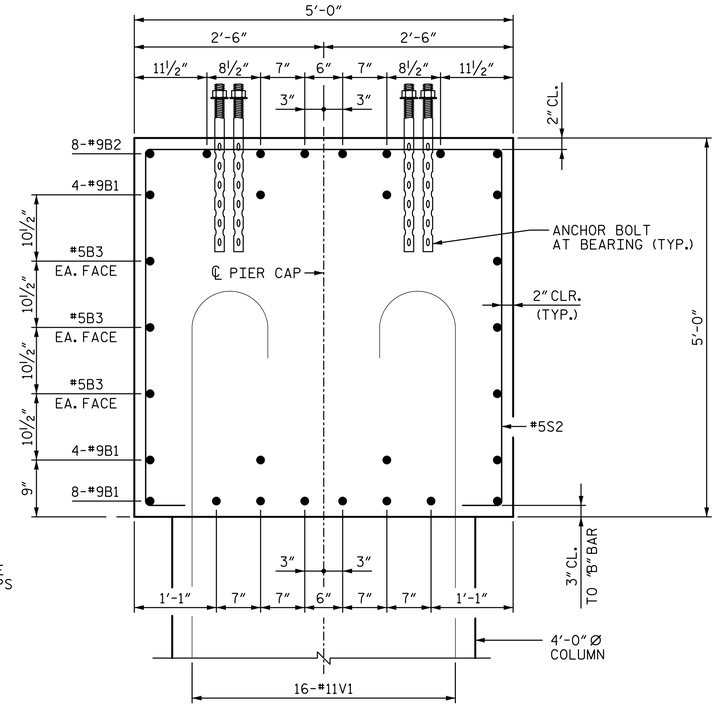

SECTION B-B

(SPIRAL NOT SHOWN FOR CLARITY)

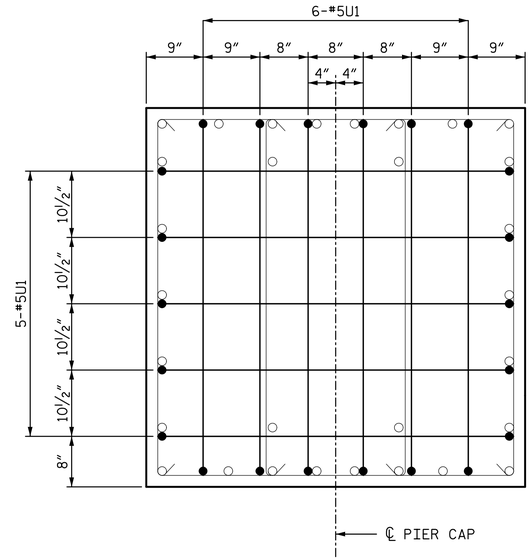

VIEW C-C

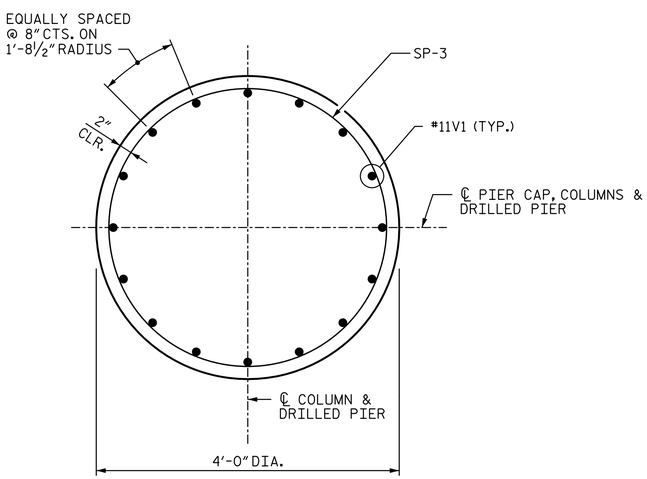

TYPICAL SECTION THROUGH COLUMN

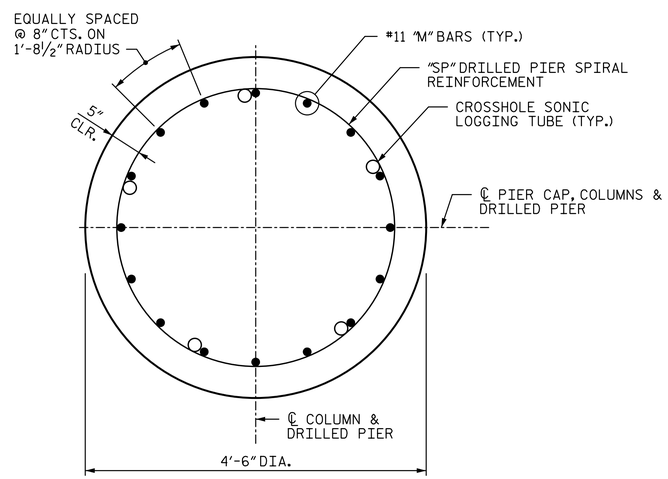

TYPICAL SECTION THROUGH DRILLED PIER

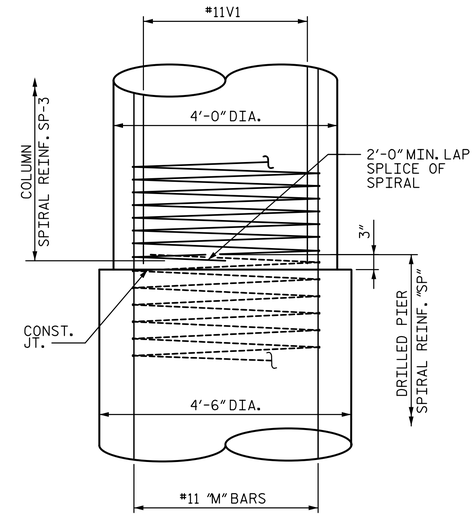

CONSTRUCTION JOINT DETAIL

PROJECT NO. U-3308

DURHAM COUNTY

STATION: POT 24+09.63 -LALT-
POT 21+11.43 -NSN-

SHEET 2 OF 3

STATE OF NORTH CAROLINA
DEPARTMENT OF TRANSPORTATION
RALEIGH

PIER 1, 2, & 3

DocuSigned by: Paul Kelly Jr
26ADE85DEC6A498...

NORTH CAROLINA PROFESSIONAL SEAL 19765 ENGINEER PAUL E. KELLY, JR.
3/31/2015

DRAWN BY : CLG DATE : 06-14
CHECKED BY : DJM DATE : 06-14

DOCUMENT NOT CONSIDERED FINAL UNLESS ALL SIGNATURES COMPLETED

STV / Ralph Whitehead Associates, Inc.
900 W Trade Street, Suite 715
Charlotte, NC 28202
NC License No. F-0991

REVISIONS							
NO.	BY:	DATE:	NO.	BY:	DATE:		
1			3				
2			4				

SHEET NO. S3-32
TOTAL SHEETS 44

REINFORCING BAR SCHEDULE

PIER 1						PIER 2						PIER 3					
MARK	NO.	SIZE	TYPE	LENGTH (FT. IN.)	WEIGHT (LBS.)	MARK	NO.	SIZE	TYPE	LENGTH (FT. IN.)	WEIGHT (LBS.)	MARK	NO.	SIZE	TYPE	LENGTH (FT. IN.)	WEIGHT (LBS.)
B1	16	#9	STR.	51′-6″	2,802	B1	16	#9	STR.	51′-6″	2,802	B1	16	#9	STR.	51′-6″	2,802
B2	8	#9	1	54′-0″	1,469	B2	8	#9	1	54′-0″	1,469	B2	8	#9	1	54′-0″	1,469
B3	6	#5	STR.	51′-6″	322	B3	6	#5	STR.	51′-6″	322	B3	6	#5	STR.	51′-6″	322
M1	32	#11	STR.	20′-6″	3,485	M1	32	#11	STR.	25′-6″	4,335	M1	32	#11	STR.	28′-6″	4,845
M2	48	#11	STR.	23′-6″	5,993	M2	48	#11	STR.	36′-6″	9,308	M2	48	#11	STR.	28′-6″	7,268
S1	64	#5	2	13′-6″	901	S1	64	#5	2	13′-6″	901	S1	64	#5	2	13′-6″	901
S2	20	#5	3	14′-11″	311	S2	20	#5	3	14′-11″	311	S2	20	#5	3	14′-11″	311
U1	22	5	5	7′-6″	172	U1	22	5	5	7′-6″	172	U1	22	5	5	7′-6″	172
V1	80	11	4	16′-6″	7,013	V1	80	11	4	16′-6″	7,013	V1	80	11	4	16′-6″	7,013
SP1	2	✳	7	516′-10″	1,078	SP1	2	✳	7	744′-0″	1,552	SP1	2	✳	7	880′-4″	1,836
SP2	3	✳	7	653′-2″	2,044	SP2	3	✳	7	1,243′-9″	3,892	SP2	3	✳	7	880′-4″	2,755
SP3	5	✳	6	569′-10″	2,972	SP3	5	✳	6	564′-2″	2,942	SP3	5	✳	6	556′-7″	2,903
REINFORCING STEEL				LBS.	22,468	REINFORCING STEEL				LBS.	26,633	REINFORCING STEEL				LBS.	25,103
SPIRAL REINFORCING STEEL				LBS.	6,094	SPIRAL REINFORCING STEEL				LBS.	8,386	SPIRAL REINFORCING STEEL				LBS.	7,494

THE CONTRACTOR'S ATTENTION IS CALLED TO THE FACT THAT THE LONGITUDINAL REINFORCEMENT FOR DRILLED PIERS IS DETAILED WITH 3 FEET OF EXTRA LENGTH.

✳ THE SPIRAL REINFORCING SHALL BE #5 PLAIN OR DEFORMED BAR WITH A 3″PITCH.

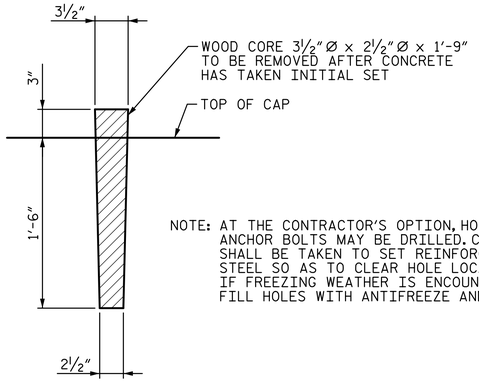

NOTE: AT THE CONTRACTOR'S OPTION, HOLE FOR ANCHOR BOLTS MAY BE DRILLED. CARE SHALL BE TAKEN TO SET REINFORCING STEEL SO AS TO CLEAR HOLE LOCATION. IF FREEZING WEATHER IS ENCOUNTERED, FILL HOLES WITH ANTIFREEZE AND SAWDUST.

DETAIL OF WOOD CORE FOR ANCHOR BOLT HOLES

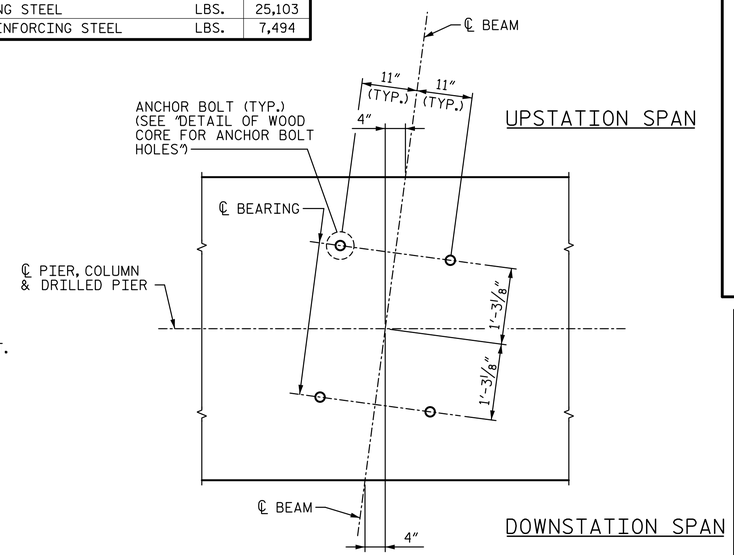

BEARING DETAIL

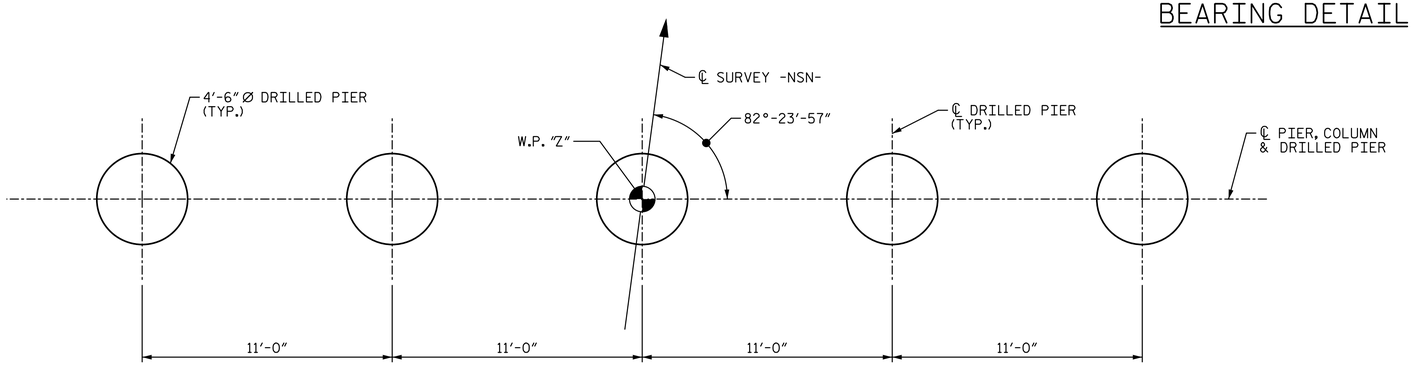

PLAN OF DRILLED PIERS

BAR TYPES

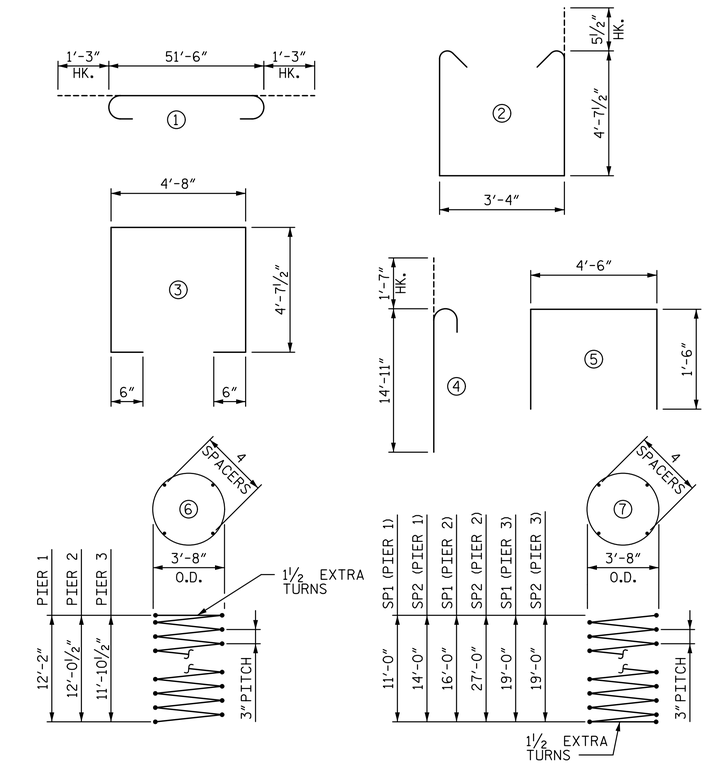

ALL BAR DIMENSIONS ARE OUT TO OUT.

QUANTITIES

			PIER 1	PIER 2	PIER 3
REINFORCING STEEL		LBS.	22,468	26,633	25,103
SPIRAL REINFORCING STEEL		LBS.	6,094	8,386	7,494
C.I.P. CONCRETE :	POUR 2 - COLUMNS	CU. YDS.	27.7	27.4	27.1
	POUR 3 - CAP	CU. YDS.	48.1	48.1	48.1
	TOTAL	CU. YDS.	75.8	75.5	75.2
4′-6″Ø DRILLED PIERS IN SOIL		L.F.	18.5	70.5	57.5
4′-6″Ø DRILLED PIERS NOT IN SOIL		L.F.	48.0	45.0	40.0
TOTAL 4′-6″Ø DRILLED PIERS		L.F.	66.5	115.5	97.5
DRILLED PIER CONCRETE :	POUR 1	CU. YDS.	39.2	68.0	57.4
CSL TUBES		L.F.	370.0	615.0	525.0
SPT TESTING		EA.	---	5	---

PROJECT NO. U-3308

DURHAM COUNTY

STATION: POT 24+09.63 -LALT-
POT 21+11.43 -NSN-

SHEET 3 OF 3

STATE OF NORTH CAROLINA
DEPARTMENT OF TRANSPORTATION
RALEIGH

PIER 1, 2, & 3

DocuSigned by: Paul Kelly Jr
26ADE85DEC6A498...

NORTH CAROLINA PROFESSIONAL SEAL 19765 ENGINEER PAUL E. KELLY, JR.
3/31/2015

STV / Ralph Whitehead Associates, Inc.
900 W Trade Street, Suite 715
Charlotte, NC 28202
NC License No. F-0991

DOCUMENT NOT CONSIDERED FINAL UNLESS ALL SIGNATURES COMPLETED

REVISIONS							SHEET NO.
NO.	BY:	DATE:	NO.	BY:	DATE:		S3-33
1			3				TOTAL SHEETS
2			4				44

DRAWN BY : VMW DATE : 06-14
CHECKED BY : DJM DATE : 06-14

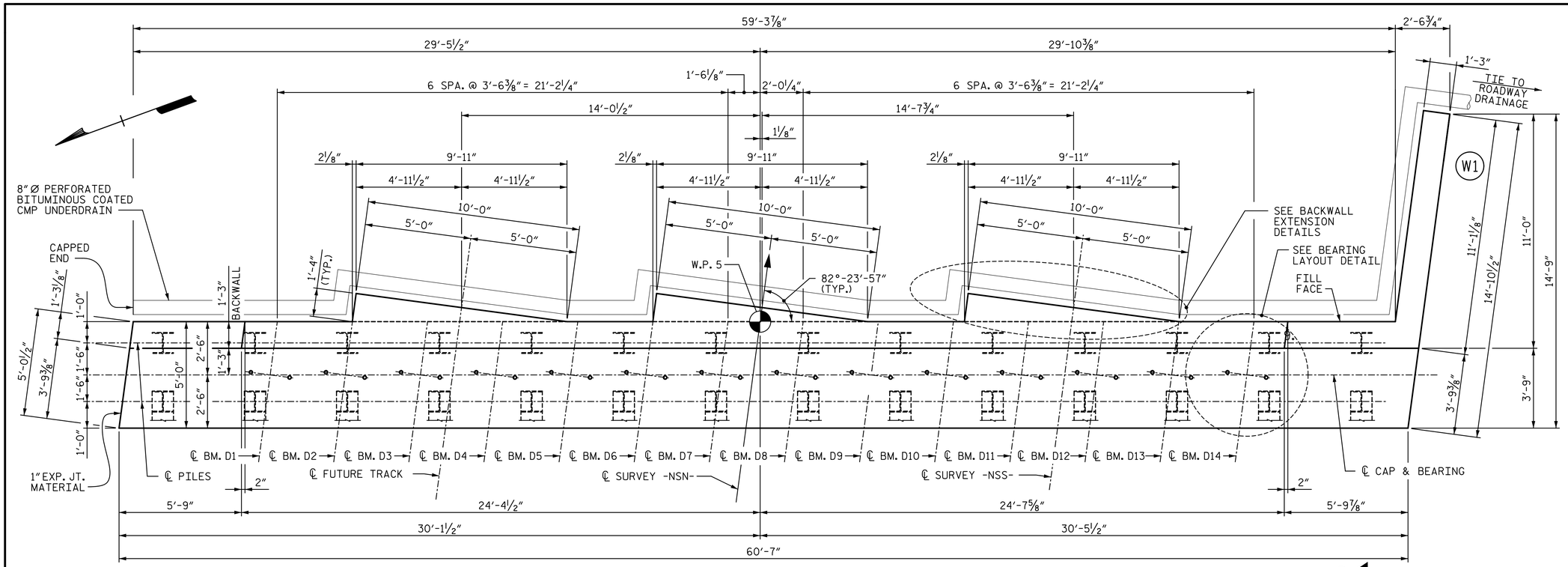

PLAN

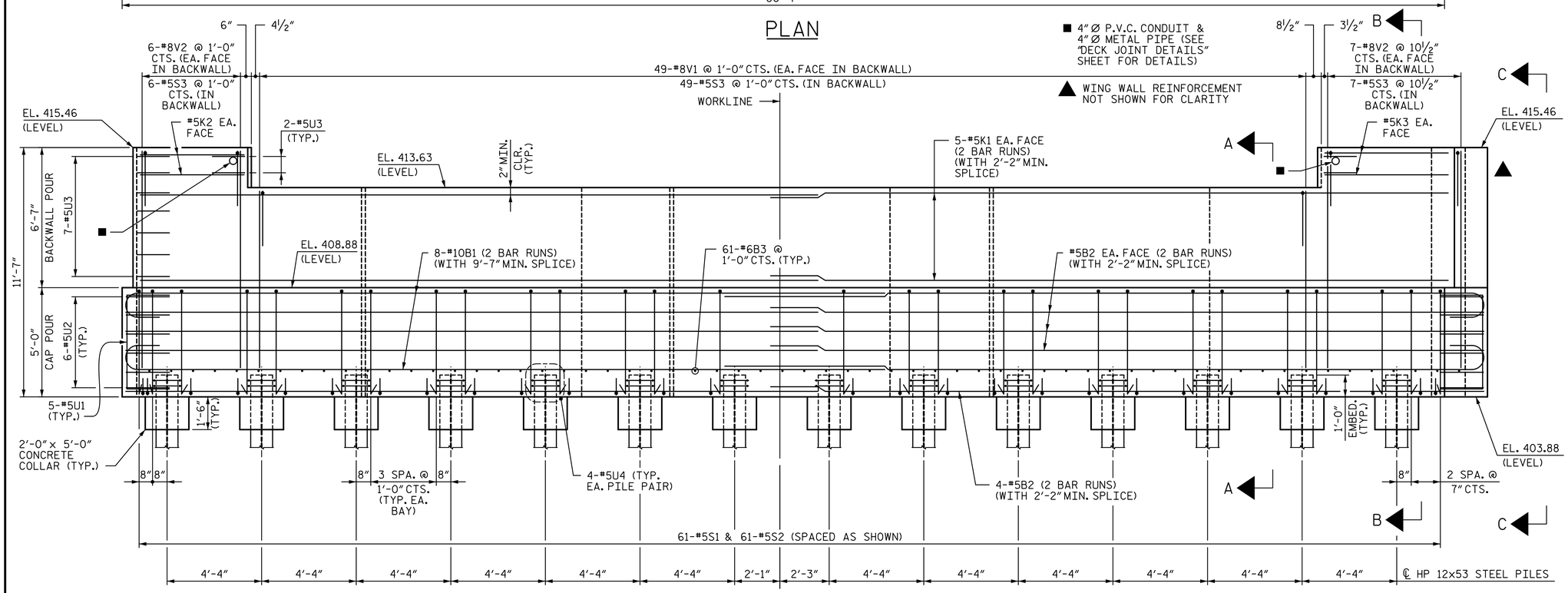

ELEVATION

(LOOKING UPSTATION)

NOTES:

1. FOR EPOXY PROTECTIVE COATING, SEE STANDARD SPECIFICATIONS.
2. BACKWALL SHALL BE PLACED BEFORE APPLYING THE EPOXY PROTECTIVE COATING.
3. THE TOP SURFACE AREAS OF THE CAP SHALL BE CURED IN ACCORDANCE WITH THE STANDARD SPECIFICATIONS EXCEPT THAT THE MEMBRANE CURING COMPOUND METHOD SHALL NOT BE USED.
4. STIRRUPS AND "U" BARS IN CAP MAY BE SHIFTED AS NECESSARY TO CLEAR ANCHOR BOLTS.
5. HOOKS ON BARS MAY BE TURNED AS NECESSARY FOR PLACING REINFORCING STEEL.
6. SEE SHEET 5 OF 5 FOR BEARING LAYOUT DETAIL AND SHEET 2 OF 5 FOR ANCHOR BLOCK OUT DETAIL.
7. SEE SHEET 3 OF 5 FOR BACKWALL EXTENSION DETAILS.
8. FOR SECTIONS AND VIEWS, SEE SHEETS 2 OF 5 AND 3 OF 5.
9. FOR WING WALL DETAILS, SEE SHEET 4 OF 5.
10. FOR BEARINGS AND ANCHOR BOLTS, SEE THE "BEARING DETAILS" SHEET.
11. FOR OTHER NOTES, SEE "FOUNDATION LAYOUT" SHEET.
12. SEE DETAIL "A" ON SHEET TITLED "DECK JOINT DETAILS", FOR LOCATION OF WATERSTOP TO BE INSTALLED IN THE BACKWALL.
13. FOR DAMPPROOFING, SEE "NS SPECIFICATION FOR CAST-IN-PLACE CONCRETE" SPECIAL PROVISION AND GENERAL NOTES ON GENERAL DRAWING SHEET 4 OF 4.

DocuSigned by: Paul Kelly Jr
26ADE85DEC6A498...

NORTH CAROLINA PROFESSIONAL SEAL 19765 ENGINEER PAUL E. KELLY, JR.
12/11/2015

PROJECT NO. U-3308

DURHAM COUNTY

STATION: POT 24+09.63 -LALT-
POT 21+11.43 -NSN-

SHEET 1 OF 5

STATE OF NORTH CAROLINA
DEPARTMENT OF TRANSPORTATION
RALEIGH

ABUTMENT 2

REVISIONS						SHEET NO.
NO.	BY:	DATE:	NO.	BY:	DATE:	S3-34
1			3			TOTAL SHEETS
2			4			44

DRAWN BY : CLG DATE : 06-14
CHECKED BY : DJM DATE : 06-14

DOCUMENT NOT CONSIDERED FINAL UNLESS ALL SIGNATURES COMPLETED

STV / Ralph Whitehead Associates, Inc.
900 W Trade Street, Suite 715
Charlotte, NC 28202
NC License No. F-0991

N:\PROJ\25325\ustation\struct\Final\403_034_U3308_SMU_AB20l.dgn 12/3/2015 9:53:18 AM chitkhmb

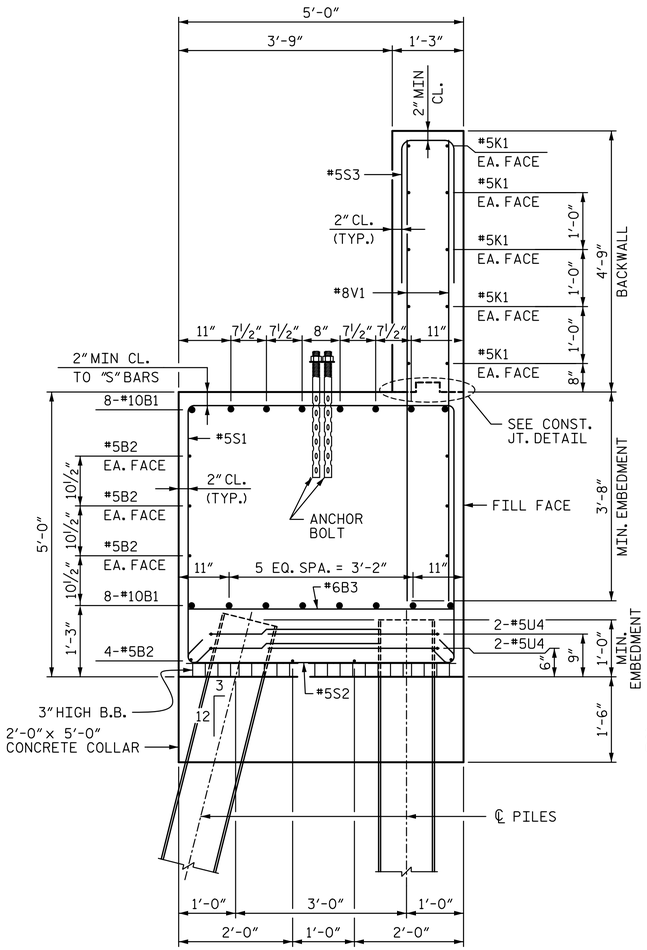

SECTION A-A

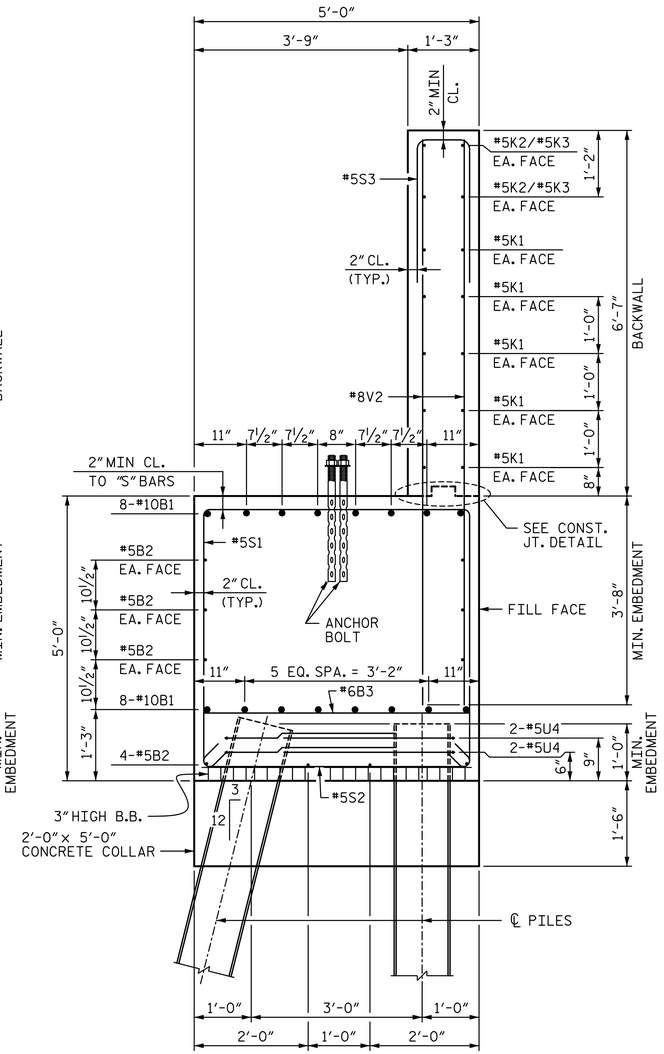

SECTION B-B

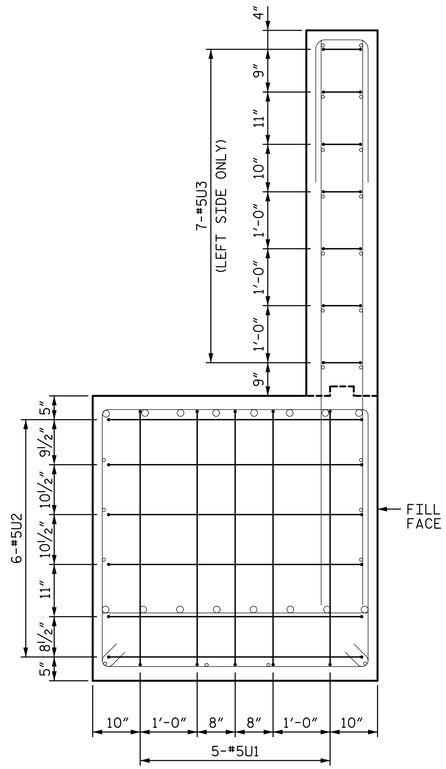

VIEW C-C

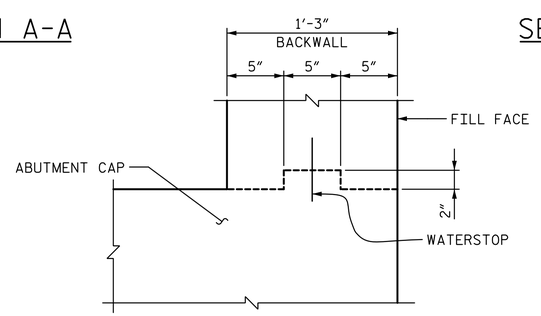

CONSTRUCTION JOINT DETAIL

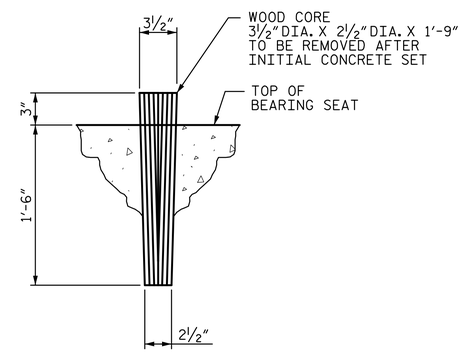

ANCHOR BLOCK OUT DETAIL

*IF FREEZING WEATHER IS ENCOUNTERED FILL HOLES WITH ANTIFREEZE AND SAWDUST.

PROJECT NO. U-3308
DURHAM COUNTY
STATION: POT 24+09.63 -LALT-
POT 21+11.43 -NSN-

SHEET 2 OF 5

STATE OF NORTH CAROLINA
DEPARTMENT OF TRANSPORTATION
RALEIGH

ABUTMENT 2

DocuSigned by: Paul Kelly Jr. 26ADE85DEC6A498...

NORTH CAROLINA PROFESSIONAL SEAL 19765 ENGINEER PAUL E. KELLY, JR.
3/31/2015

REVISIONS						SHEET NO.
NO.	BY:	DATE:	NO.	BY:	DATE:	S3-35
1			3			TOTAL SHEETS
2			4			44

DRAWN BY : TJT DATE : 06-14
CHECKED BY : DJM DATE : 06-14

DOCUMENT NOT CONSIDERED FINAL UNLESS ALL SIGNATURES COMPLETED

STV / Ralph Whitehead Associates, Inc.
900 W Trade Street, Suite 715
Charlotte, NC 28202
NC License No. F-0991

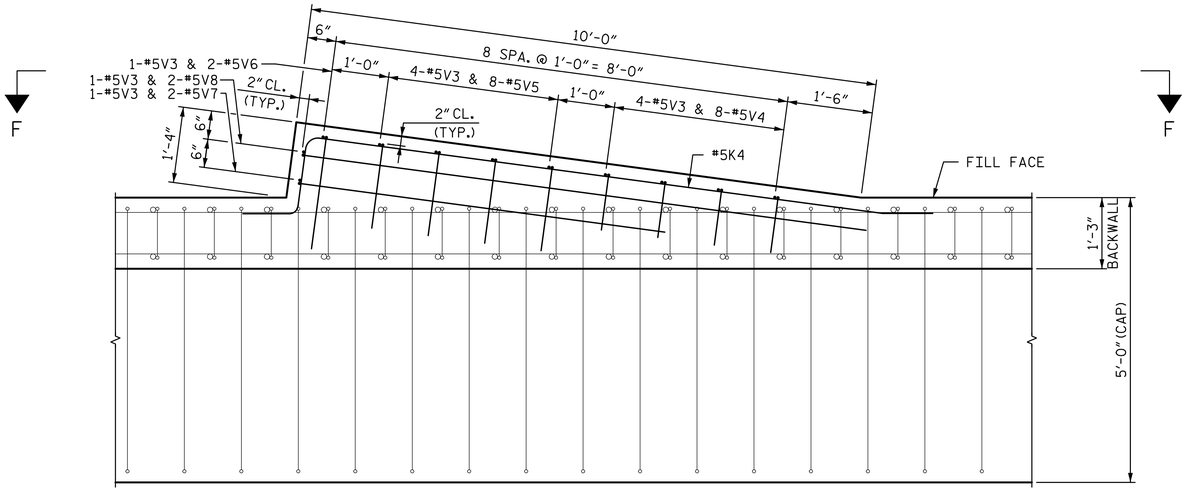

PLAN - TYPICAL BACKWALL EXTENSION DETAIL

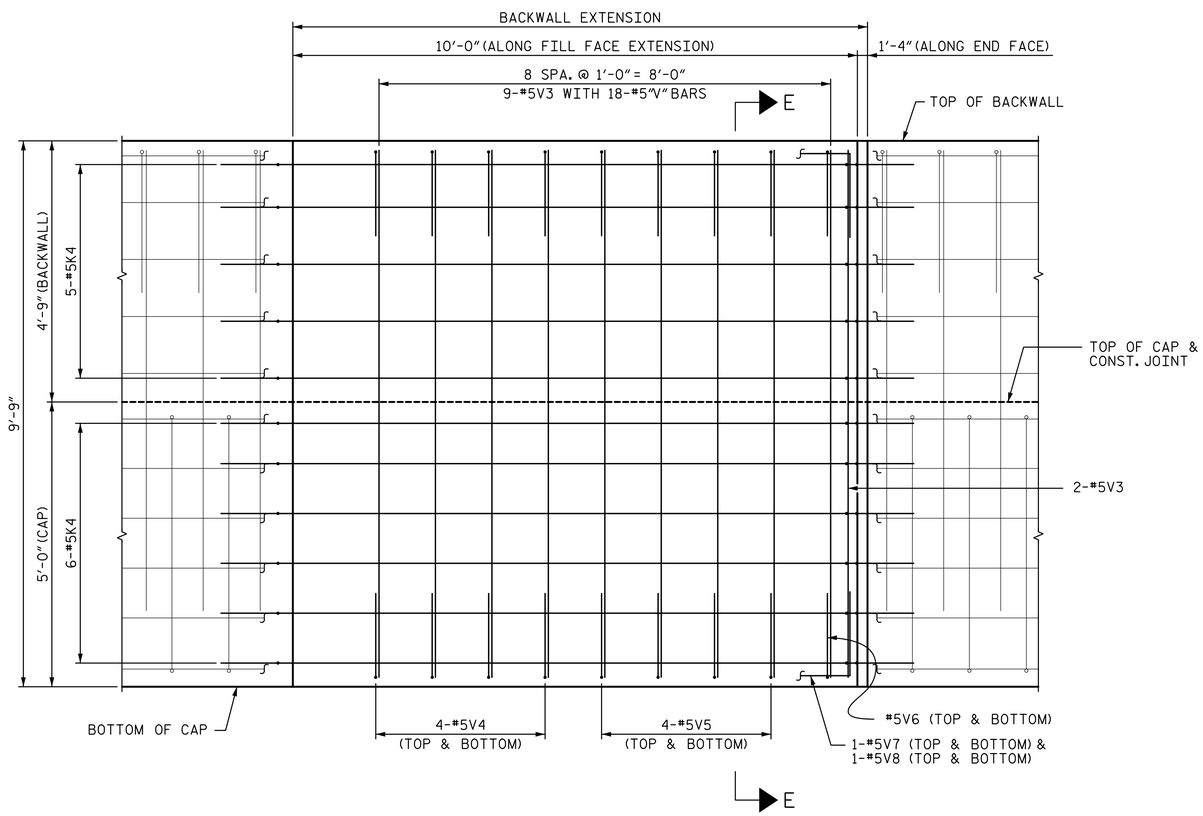

VIEW F-F - TYPICAL BACKWALL EXTENSION DETAIL

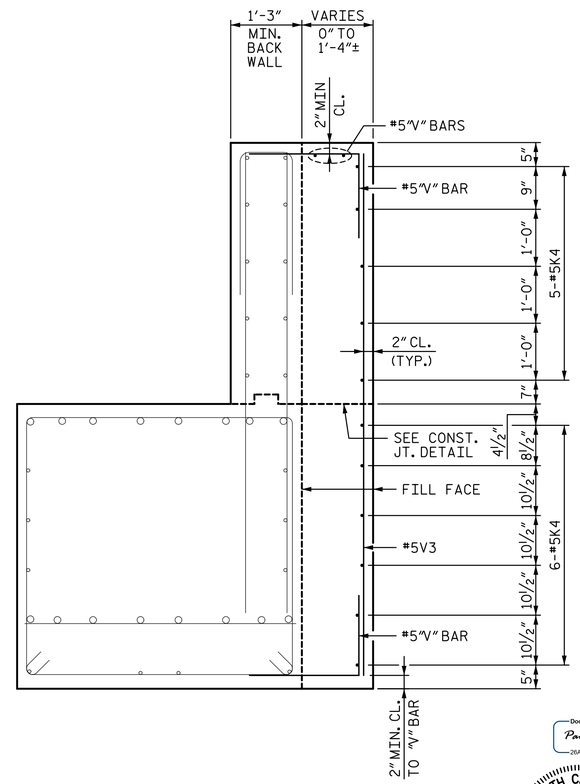

SECTION E-E

PROJECT NO. U-3308

DURHAM COUNTY

STATION: POT 24+09.63 -LALT-
POT 21+11.43 -NSN-

SHEET 3 OF 5

STATE OF NORTH CAROLINA
DEPARTMENT OF TRANSPORTATION
RALEIGH

ABUTMENT 2

DocuSigned by: Paul Kelly Jr.
26ADE85DEC6A498...

NORTH CAROLINA PROFESSIONAL SEAL 19765 ENGINEER PAUL E. KELLY, JR.
3/31/2015

REVISIONS						SHEET NO.
NO.	BY:	DATE:	NO.	BY:	DATE:	S3-36
1			3			TOTAL SHEETS
2			4			44

STV / Ralph Whitehead Associates, Inc.
900 W Trade Street, Suite 715
Charlotte, NC 28202
NC License No. F-0991

DOCUMENT NOT CONSIDERED FINAL UNLESS ALL SIGNATURES COMPLETED

DRAWN BY : TJT/CLG DATE : 06-14
CHECKED BY : DJM DATE : 06-14

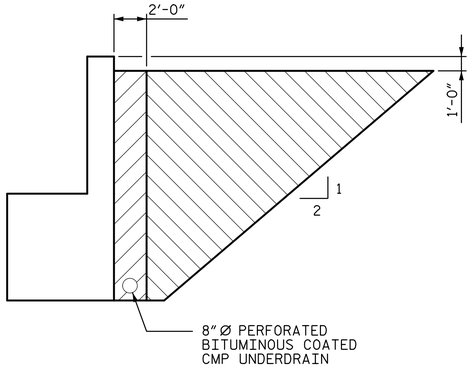

UNDERDRAIN DETAIL

STRUCTURE BACKFILL

POROUS BACKFILL

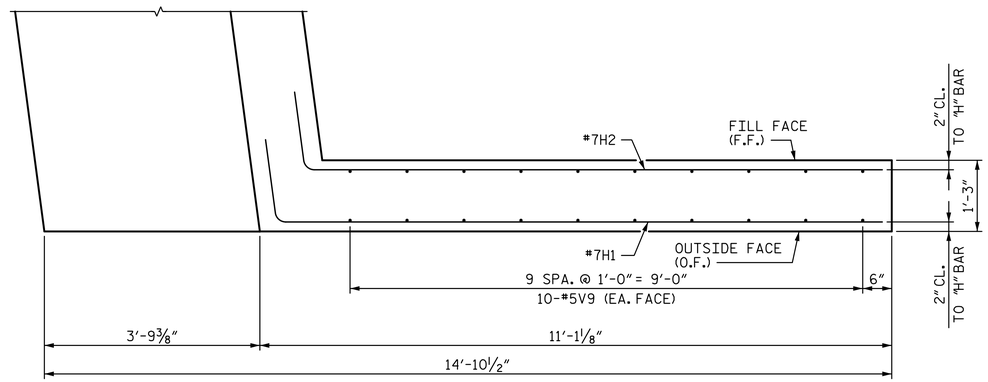

PLAN (W1)

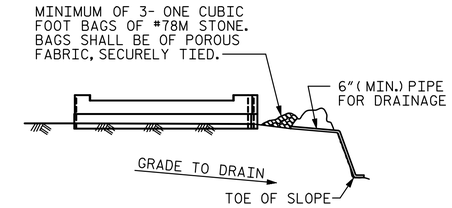

BAGGED STONE AND PIPE SHALL BE PLACED IMMEDIATELY AFTER COMPLETION OF END BENT EXCAVATION. PIPE MAY BE EITHER CONCRETE, CORRUGATED STEEL, CORRUGATED ALUMINUM ALLOY, OR CORRUGATED PLASTIC. PERFORATED PIPE WILL NOT BE ALLOWED.

BAGGED STONE SHALL REMAIN IN PLACE UNTIL THE ENGINEER DIRECTS THAT IT BE REMOVED. THE CONTRACTOR SHALL REMOVE AND DISPOSE OF SILT ACCUMULATIONS AT BAGGED STONE WHEN SO DIRECTED BY THE ENGINEER. BAGS SHALL BE REMOVED AND REPLACED WHENEVER THE ENGINEER DETERMINES THAT THEY HAVE DETERIORATED AND LOST THEIR EFFECTIVENESS.

NO SEPARATE PAYMENT WILL BE MADE FOR THIS WORK AND THE ENTIRE COST OF THIS WORK SHALL BE INCLUDED IN THE UNIT CONTRACT PRICE BID FOR THE SEVERAL PAY ITEMS.

TEMPORARY DRAINAGE AT END BENT

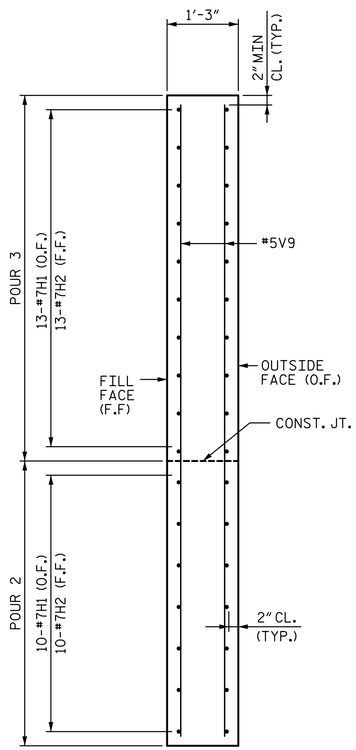

SECTION G-G

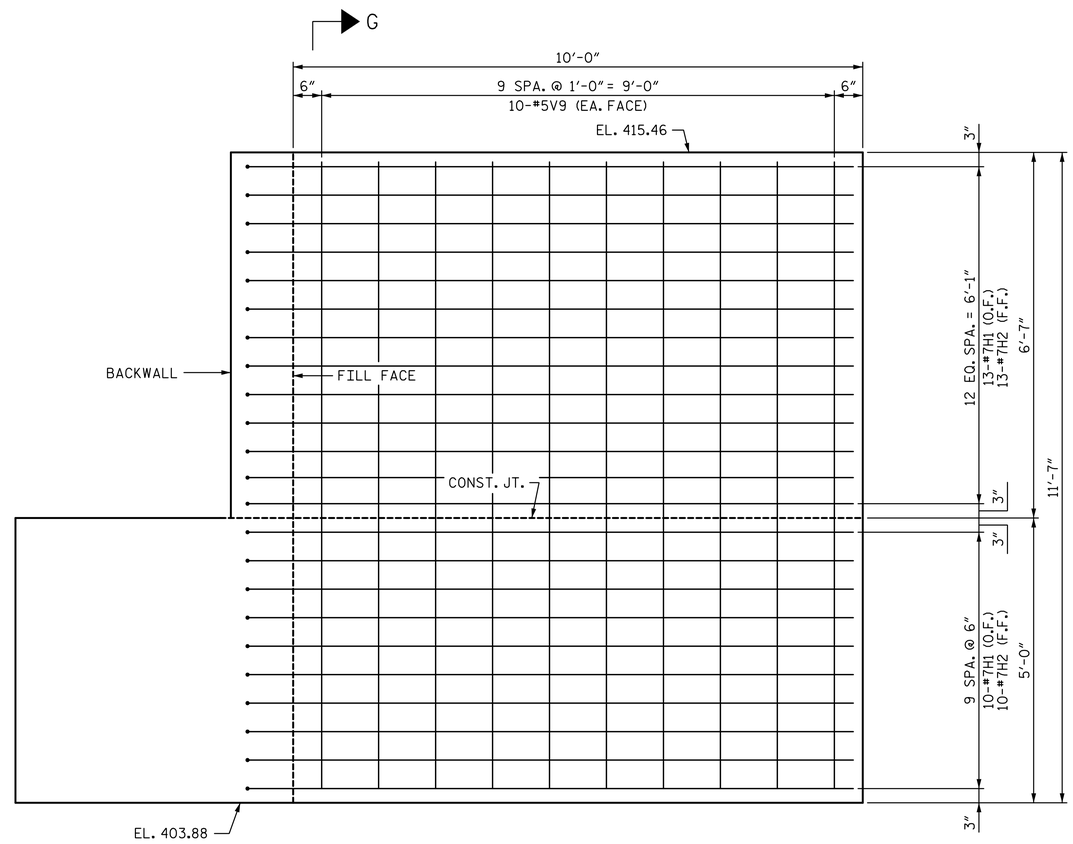

ELEVATION (W1)

PROJECT NO. U-3308

DURHAM COUNTY

STATION: POT 24+09.63 -LALT-
POT 21+11.43 -NSN-

SHEET 4 OF 5

STATE OF NORTH CAROLINA
DEPARTMENT OF TRANSPORTATION
RALEIGH

ABUTMENT 2

DocuSigned by: Paul Kelly Jr. 26ADE85DEC6A498...

NORTH CAROLINA PROFESSIONAL SEAL 19765 ENGINEER PAUL E. KELLY, JR.

3/31/2015

REVISIONS						
NO.	BY:	DATE:	NO.	BY:	DATE:	
1			3			
2			4			

SHEET NO. S3-37

TOTAL SHEETS 44

DRAWN BY : TJT DATE : 06-14
CHECKED BY : DJM DATE : 06-14

DOCUMENT NOT CONSIDERED FINAL UNLESS ALL SIGNATURES COMPLETED

STV / Ralph Whitehead Associates, Inc.
900 W Trade Street, Suite 715
Charlotte, NC 28202
NC License No. F-0991

alveyac 3/30/2015 1:40:23 PM I:\PROJ\25325\ustation\struct\Final\403_037_U3308_SMU_AB204.dgn

REINFORCING BAR SCHEDULE

ABUTMENT 2

MARK	NO.	SIZE	TYPE	LENGTH (FT. IN.)	WEIGHT (LB.)
B1	32	10	1	37'-4"	5,141
B2	16	5	STR.	31'-3"	522
B3	61	6	STR.	4'-6"	412
H1	23	7	8	12'-2"	572
H2	23	7	8	11'-5"	537
K1	20	5	STR.	31'-3"	652
K2	4	5	STR.	4'-11"	21
K3	4	5	STR.	5'-11"	25
K4	33	5	5	13'-6"	465
S1	61	5	2	14'-10"	944
S2	61	5	3	5'-7"	355
S3	62	5	4	5'-11"	383
U1	10	5	4	7'-6"	78
U2	12	5	6	7'-6"	94
U3	11	5	4	3'-9"	43
U4	56	5	4	7'-4"	428
V1	98	8	STR.	8'-3"	2,159
V2	26	8	STR.	10'-1"	700
V3	33	5	STR.	9'-4"	321
V4	24	5	9	2'-6"	63
V5	24	5	9	3'-0"	75
V6	6	5	9	3'-6"	22
V7	6	5	9	8'-0"	50
V8	6	5	9	11'-6"	72
V9	20	5	STR.	11'-2"	233
REINFORCING STEEL				LBS.	14,367

BAR TYPES

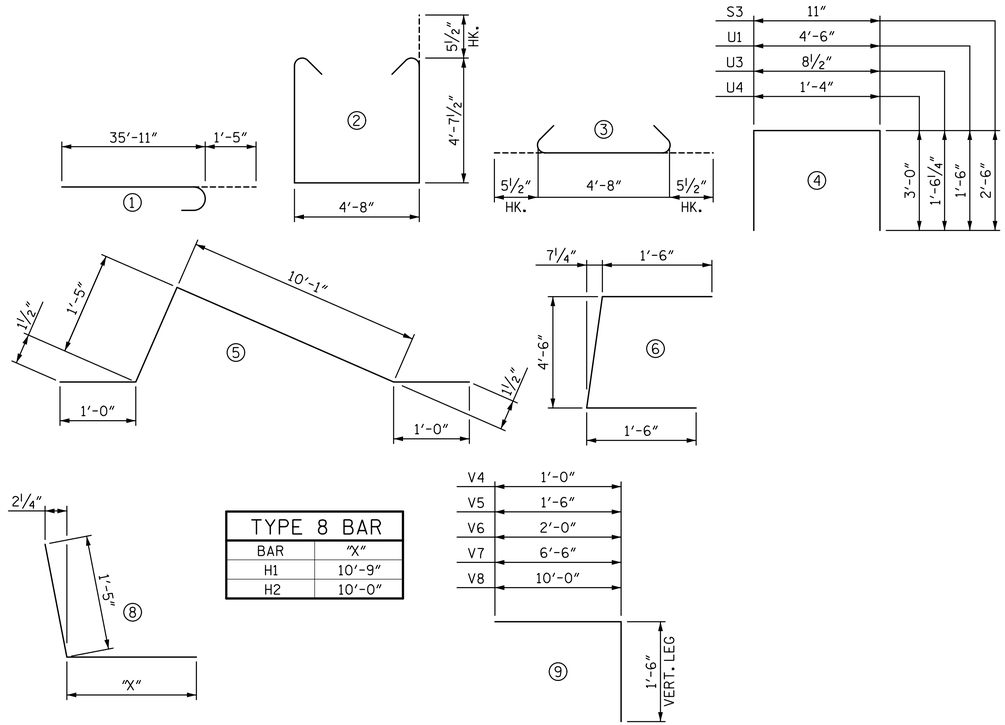

TYPE 8 BAR	
BAR	"X"
H1	10'-9"
H2	10'-0"

ALL BAR DIMENSIONS ARE OUT TO OUT

QUANTITIES

			ABUT. 2
REINFORCING STEEL		LBS.	14,367
C.I.P. CONCRETE :	POUR 1 - CAP & LOWER WING WALL	CU. YDS.	70.0
	POUR 2 - BACKWALL & UPPER WING WALL	CU. YDS.	20.8
	TOTAL	CU. YDS.	90.8
HP 12x53 STEEL PILES			
NO.		EA.	28
LENGTH		L.F.	840.0

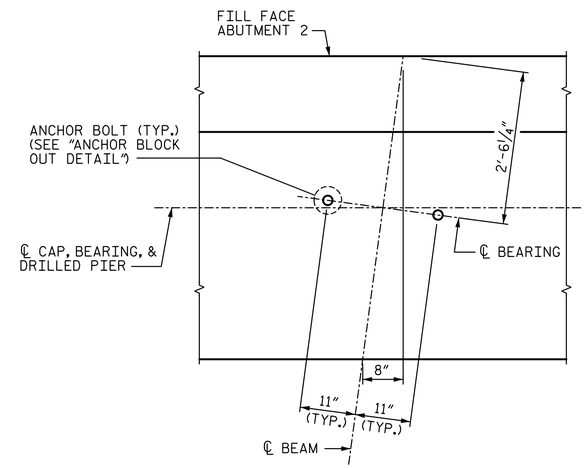

BEARING LAYOUT DETAIL

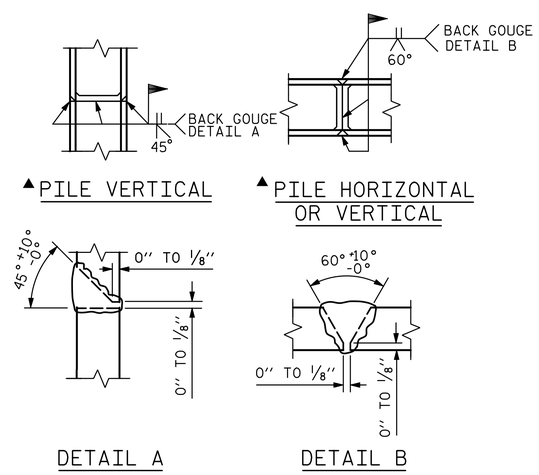

▲ PILE VERTICAL

▲ PILE HORIZONTAL OR VERTICAL

DETAIL A

DETAIL B

▲ POSITION OF PILE DURING WELDING.

PILE SPLICE DETAILS

PROJECT NO. U-3308

DURHAM COUNTY

STATION: POT 24+09.63 -LALT-
POT 21+11.43 -NSN-

SHEET 5 OF 5

STATE OF NORTH CAROLINA
DEPARTMENT OF TRANSPORTATION
RALEIGH

ABUTMENT 2

DocuSigned by: Paul Kelly Jr
26ADE85DEC6A498...

NORTH CAROLINA PROFESSIONAL SEAL 19765 ENGINEER PAUL E. KELLY, JR.
3/31/2015

DOCUMENT NOT CONSIDERED FINAL UNLESS ALL SIGNATURES COMPLETED

STV / Ralph Whitehead Associates, Inc.
900 W Trade Street, Suite 715
Charlotte, NC 28202
NC License No. F-0991

REVISIONS								SHEET NO.
NO.	BY:	DATE:	NO.	BY:	DATE:			S3-38
1			3					TOTAL SHEETS
2			4					44

DRAWN BY : TJT/CLG DATE : 06-14
CHECKED BY : DJM DATE : 06-14

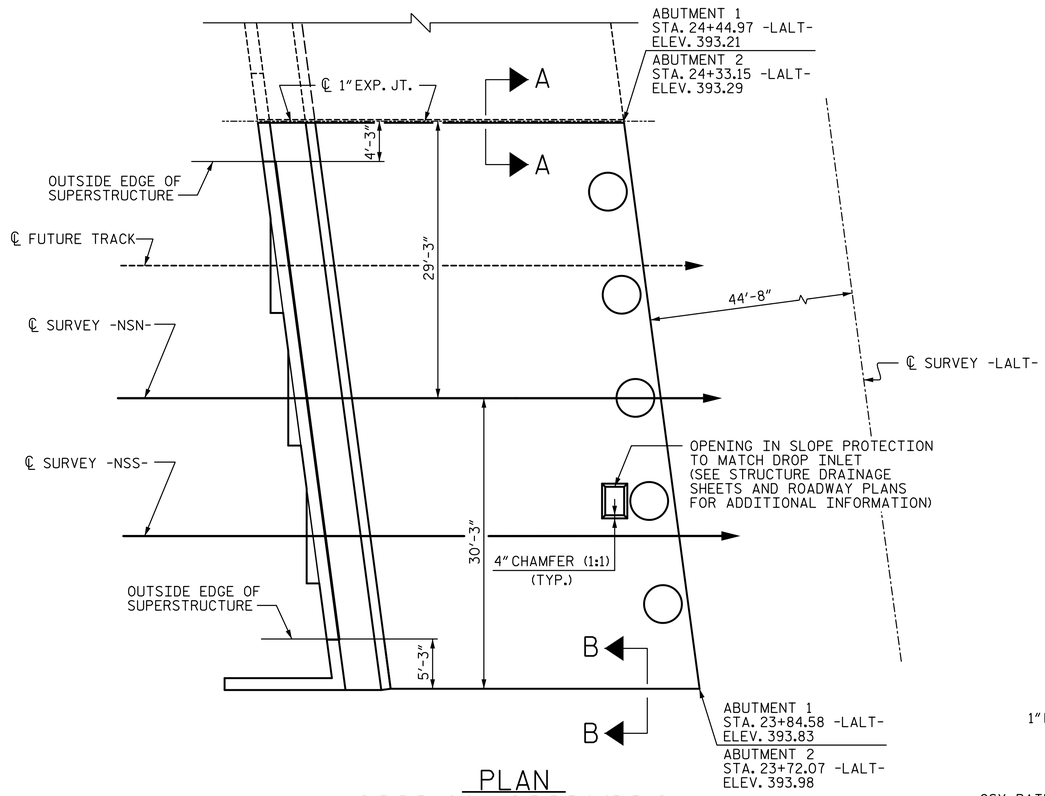

PLAN

ABUTMENT 1 SHOWN, ABUTMENT 2 SIMILAR

NOTES

SLOPE PROTECTION SHALL BE PLACED UNDER THE ENDS OF THE BRIDGE AS SHOWN IN THE DETAILS. STRAIGHT EDGING WILL NOT BE REQUIRED UNLESS, IN THE OPINION OF THE ENGINEER, VISUAL INSPECTION INDICATES A NEED FOR IT. MEASUREMENT AND PAYMENT SHALL BE AS PRESCRIBED IN SECTION 462 OF THE STANDARD SPECIFICATIONS. FOR BERM WIDTH, SEE GENERAL DRAWING.

SLOPE PROTECTION SHALL CONSIST OF 4" POURED-IN-PLACE CONCRETE PAVING AS SHOWN IN THE DETAILS ON THIS SHEET. CONCRETE SHALL BE CLASS "B". THE CONCRETE SURFACE SHALL BE FLOATED WITH A WOODEN FLOAT AND FINISHED. WELDED WIRE FABRIC REINFORCING SHALL BE 6 X 6 - W1.4 X W1.4, 60" WIDE. SLOPE PROTECTION SHALL BE POURED IN 5' STRIPS AS SHOWN IN THE "POURING DETAIL" WITH 2'-0" LONG #4 BARS PLACED ALONG THE SLOPE BETWEEN STRIPS AT 1'-6" MAXIMUM SPACING. SLOPE PROTECTION MAY BE POURED IN ALTERNATE 4' AND 5' STRIPS AS SHOWN IN THE "OPTIONAL POURING DETAIL" WITH ADJACENT RUNS OF WELDED WIRE FABRIC LAPPING AT LEAST 6". THE COST OF THE WELDED WIRE FABRIC AND #4 BARS, IF USED, SHALL BE INCLUDED IN THE CONTRACT UNIT PRICE BID PER SQUARE YARD FOR SLOPE PROTECTION.

1" EXPANSION JOINT MATERIAL AND ALL LABOR, MATERIALS AND INCIDENTALS REQUIRED FOR INSTALLATION SHALL BE CONSIDERED INCIDENTAL TO THE PAY ITEM, "4 INCH SLOPE PROTECTION".

BRIDGE @ STA. 24+09.63 -LALT-	4 INCH SLOPE PROTECTION	* WELDED WIRE FABRIC 60 INCHES WIDE
	SQUARE YARDS	APPROX. L.F.
ABUTMENT 1	233	560
ABUTMENT 2	233	560

* QUANTITY SHOWN IS BASED ON 5' POURS.

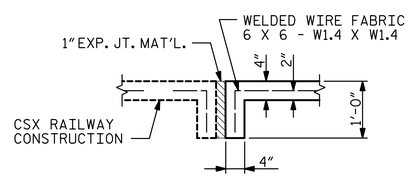

SECTION A-A

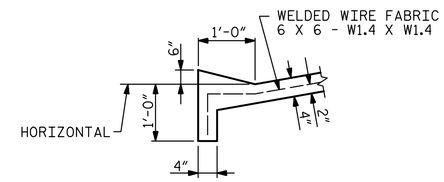

SECTION B-B

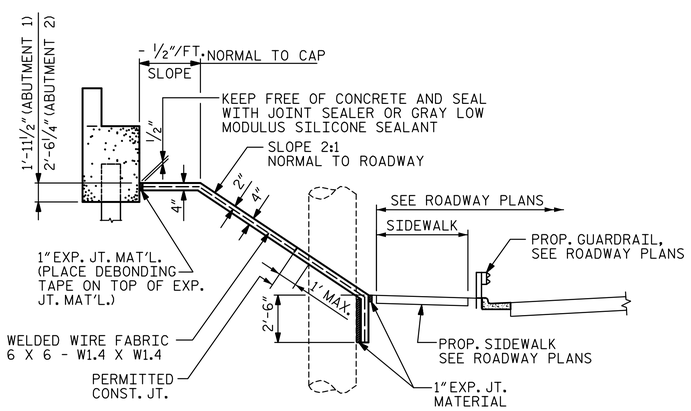

SECTION ALONG ℄ ROADWAY WITH SHOULDER PIER

DETAILS FOR ALTERNATE "A"

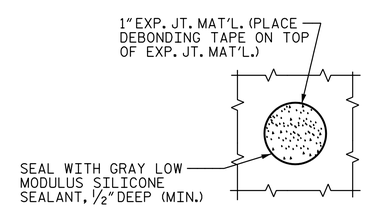

PLAN WHERE CONCRETE SLOPE PROTECTION MUST BE PLACED AROUND A BENT COLUMN

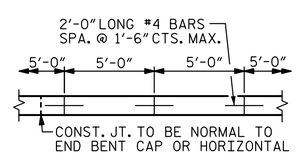

STRIP WIDTHS MAY VARY IN CURVED PORTION.

POURING DETAIL

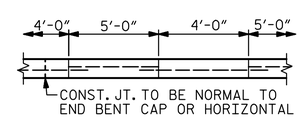

POUR A 4'-0" STRIP FIRST. STRIP WIDTHS MAY VARY IN CURVED PORTION.

OPTIONAL POURING DETAIL

DocuSigned by: Paul Kelly Jr. 26ADE85DEC6A498...

NORTH CAROLINA PROFESSIONAL SEAL 19765 ENGINEER PAUL E. KELLY, JR.

3/31/2015

PROJECT NO. U-3308
DURHAM COUNTY
STATION: POT 24+09.63 -LALT-
POT 21+11.43 -NSN-

STATE OF NORTH CAROLINA
DEPARTMENT OF TRANSPORTATION
RALEIGH

SLOPE PROTECTION DETAILS

REVISIONS								SHEET NO.
NO.	BY:	DATE:	NO.	BY:	DATE:			S3-39
1			3					TOTAL SHEETS
2			4					44

DRAWN BY : MTC DATE : 06-14
CHECKED BY : DJM DATE : 06-14

DOCUMENT NOT CONSIDERED FINAL UNLESS ALL SIGNATURES COMPLETED

STV / Ralph Whitehead Associates, Inc.
900 W Trade Street, Suite 715
Charlotte, NC 28202
NC License No. F-0991

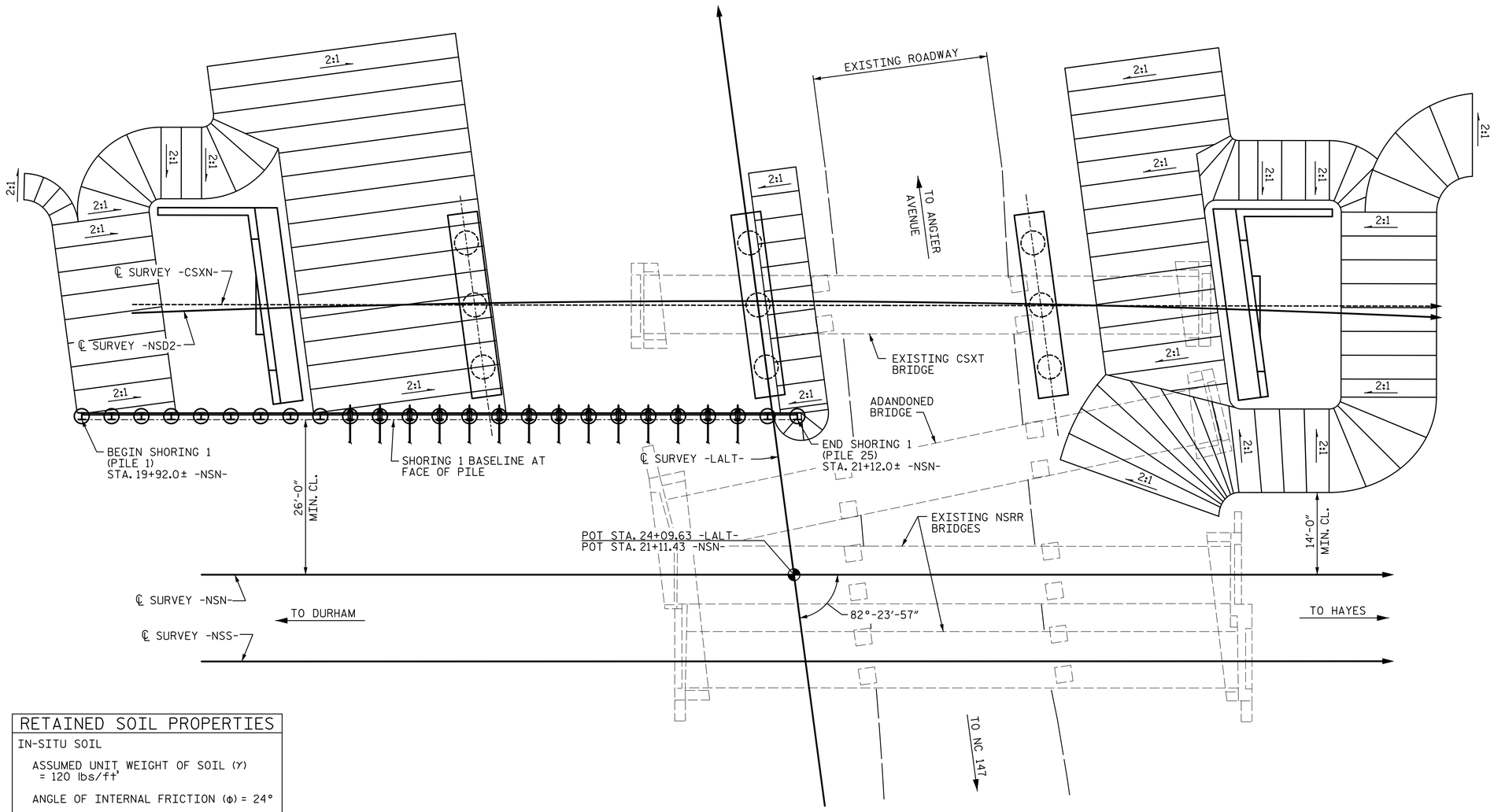

PLAN - STAGE 2

NOTES:

1. FOR TEMPORARY RAILROAD SHORING, SEE SPECIAL PROVISIONS.
2. ALL STEEL HP PILING, STEEL W SHAPES, STEEL PLATES, AND ANGLES SHALL BE ASTM A709 GR. 50, IN GOOD CONDITION.
3. ALL TIMBER SHALL BE GRADE NO. 2 SOUTHERN PINE, IN GOOD CONDITION.
4. FOR EXCAVATABLE FLOWABLE FILL, SEE SECTION 1000-6 OF THE STANDARD SPECIFICATIONS.
5. CONTRACTOR SHALL DETERMINE EXACT LOCATION OF SHORING AND LIMITS OF EXCAVATION IN THE FIELD. IF SHORING DEPTHS OR RAILROAD CLEARANCES VIOLATE THESE PLANS, THE CONTRACTOR SHALL NOTIFY THE ENGINEER.
6. CONTRACTOR SHALL VERIFY REQUIRED PILE LENGTHS PRIOR TO INSTALLATION.
7. IT IS THE CONTRACTOR'S RESPONSIBILITY TO FOLLOW ANY AND ALL ADDITIONAL OSHA AND STATE SAFETY REQUIREMENTS PERTAINING TO THIS EXCAVATION.
8. FOR DETAILS, SEE SHEETS 3,4, AND 5 OF 5.
9. CONTRACTOR SHALL VERIFY LOCATION OF EXISTING UTILITIES PRIOR TO START OF CONSTRUCTION AND NOTIFY THE ENGINEER IF THERE ARE ANY CONFLICTS.
10. ALL WELDING SHALL BE IN ACCORDANCE WITH CURRENT AWS STANDARDS AND PERFORMED BY A CERTIFIED WELDER.
11. CONCRETE FOR SHAFTS SHALL BE CLASS A AND HAVE A MINIMUM COMPRESSIVE STRENGTH OF 3,000 psi.
12. CONTRACTOR MAY SUBMIT FOR APPROVAL ALTERNATE SHORING PLANS AND CALCULATIONS. SHORING PLANS SHALL BE SIGNED AND SEALED BY A PROFESSIONAL ENGINEER LICENSED IN NORTH CAROLINA. PLANS AND CALCULATIONS SHALL BE APPROVED PRIOR TO BEGINNING CONSTRUCTION.
13. ALL TIE BACKS SHALL BE A CEMENT GROUTED ANCHOR EMBEDDED INTO BEDROCK AND SHALL BE DESIGNED FOR A SERVICE LOAD OF 70 KIPS. CONTRACTOR SHALL SUBMIT ANCHOR DESIGN FOR APPROVAL PRIOR TO BEGINNING CONSTRUCTION. ANCHOR DESIGN SHALL BE SIGNED AND SEALED BY A PROFESSIONAL ENGINEER LICENSED IN NORTH CAROLINA.
14. DIRECT DRAINAGE AWAY FROM FACE OF SHORING.
15. INSTALLED PILES SHALL BE WITHIN 1/8"/FT FROM VERTICAL.
16. TEMPORARY RAILROAD SHORING HAS BEEN DESIGNED FOR THE RETAINED SOIL PROPERTIES SHOWN ON THESE PLANS AND IN ACCORDANCE WITH AREMA CHAPTER 8 AND CSXT AND NORFOLK SOUTHERN REQUIREMENTS.

RETAINED SOIL PROPERTIES

IN-SITU SOIL

ASSUMED UNIT WEIGHT OF SOIL (γ) = 120 lbs/ft³

ANGLE OF INTERNAL FRICTION (ϕ) = 24°

COHESION (c) = 0

WALL FRICTION = 8°

WEATHERED ROCK (EL. VARIES 388-393)

ASSUMED UNIT WEIGHT OF SOIL (γ) = 70 lbs/ft³

ANGLE OF INTERNAL FRICTION (ϕ) = 36°

COHESION (c) = 0

WALL FRICTION = 12°

SHOULD THE CONTRACTOR ENCOUNTER SOIL OTHER THAN DESCRIBED ABOVE, THE CONTRACTOR SHALL NOTIFY THE ENGINEER IMMEDIATELY.

PROJECT NO. U-3308

DURHAM COUNTY

STATION: POT 24+09.63 -LALT-
POT 21+11.43 -NSN-

SHEET 1 OF 5

DocuSigned by: Paul Kelly Jr
26ADE85DEC6A498...

NORTH CAROLINA PROFESSIONAL SEAL 19765 ENGINEER PAUL E. KELLY, JR.
3/31/2015

STATE OF NORTH CAROLINA
DEPARTMENT OF TRANSPORTATION
RALEIGH

TEMPORARY SHORING

REVISIONS								SHEET NO.
NO.	BY:	DATE:	NO.	BY:	DATE:			S3-40
1			3					TOTAL SHEETS
2			4					44

DRAWN BY : TRL/TJT DATE : 6-14
CHECKED BY : PEK DATE : 6-14

DOCUMENT NOT CONSIDERED FINAL UNLESS ALL SIGNATURES COMPLETED

STV / Ralph Whitehead Associates, Inc.
900 W Trade Street, Suite 715
Charlotte, NC 28202
NC License No. F-0991

3/30/2015 1:40:24 PM I:\PROJ\25325\Nustation\structure\Final\403_040_U3308_SMU_TPS01.dgn alveyac

NOTES:

1. FOR NOTES, SEE SHEET 1 OF 5.
2. FOR DETAILS, SEE SHEETS 3,4, AND 5 OF 5.

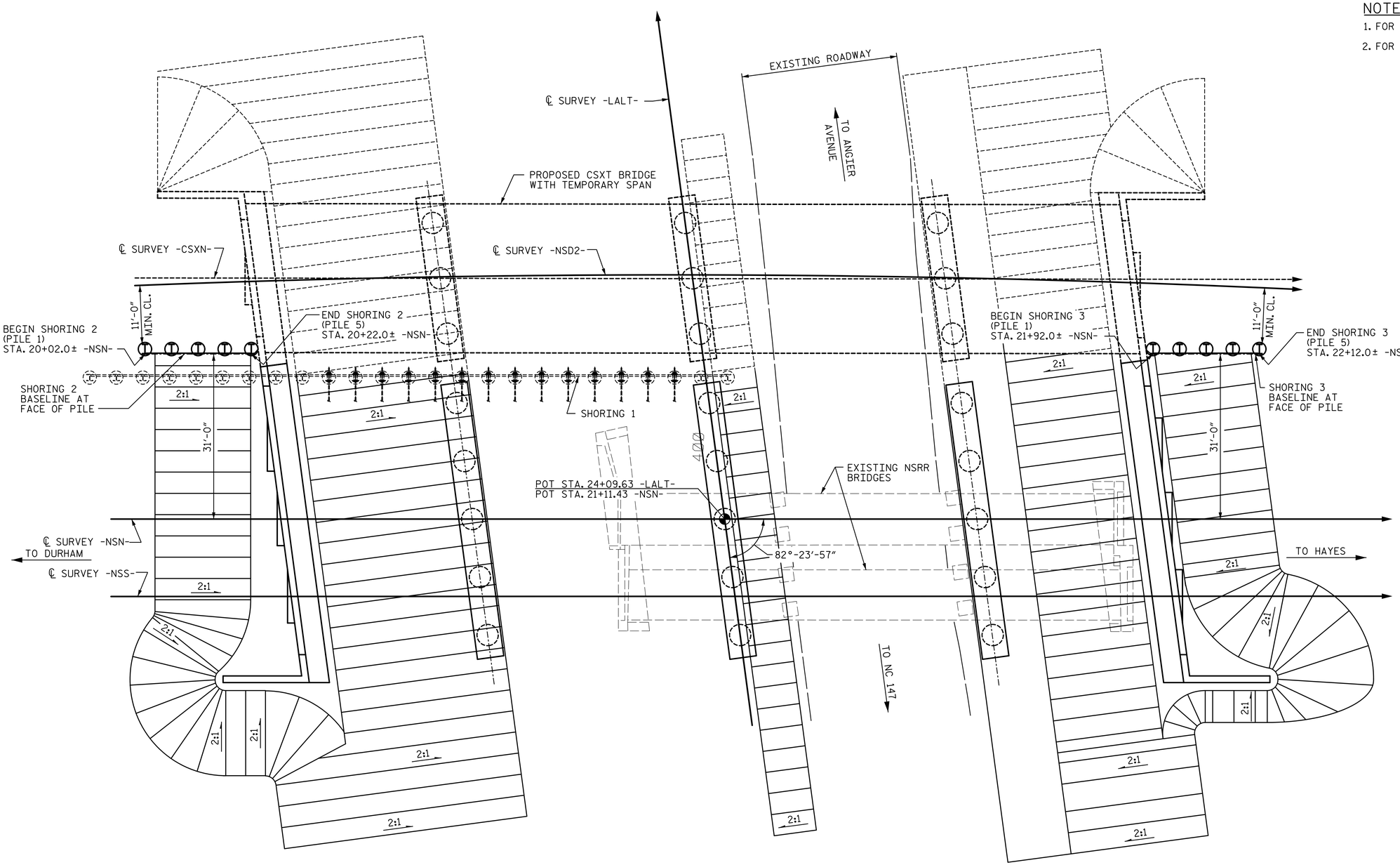

PLAN - STAGE 3

PROJECT NO. U-3308

DURHAM COUNTY

STATION: POT 24+09.63 -LALT-
POT 21+11.43 -NSN-

SHEET 2 OF 5

STATE OF NORTH CAROLINA
DEPARTMENT OF TRANSPORTATION
RALEIGH

TEMPORARY SHORING

DocuSigned by: Paul Kelly Jr. 26ADE85DEC6A498...

NORTH CAROLINA PROFESSIONAL SEAL 19765 ENGINEER PAUL E. KELLY, JR. 3/31/2015

REVISIONS						SHEET NO.
NO.	BY:	DATE:	NO.	BY:	DATE:	S3-41
1			3			TOTAL SHEETS
2			4			44

DRAWN BY : TRL/TJT DATE : 6-14
CHECKED BY : PEK DATE : 6-14

DOCUMENT NOT CONSIDERED FINAL UNLESS ALL SIGNATURES COMPLETED

STV / Ralph Whitehead Associates, Inc.
900 W Trade Street, Suite 715
Charlotte, NC 28202
NC License No. F-0991

alveyac 3/30/2015 1:40:24 PM I:\PROJ\25325\ustation\struct\Final\403_04LU3308_SMU_TPS02.dgn

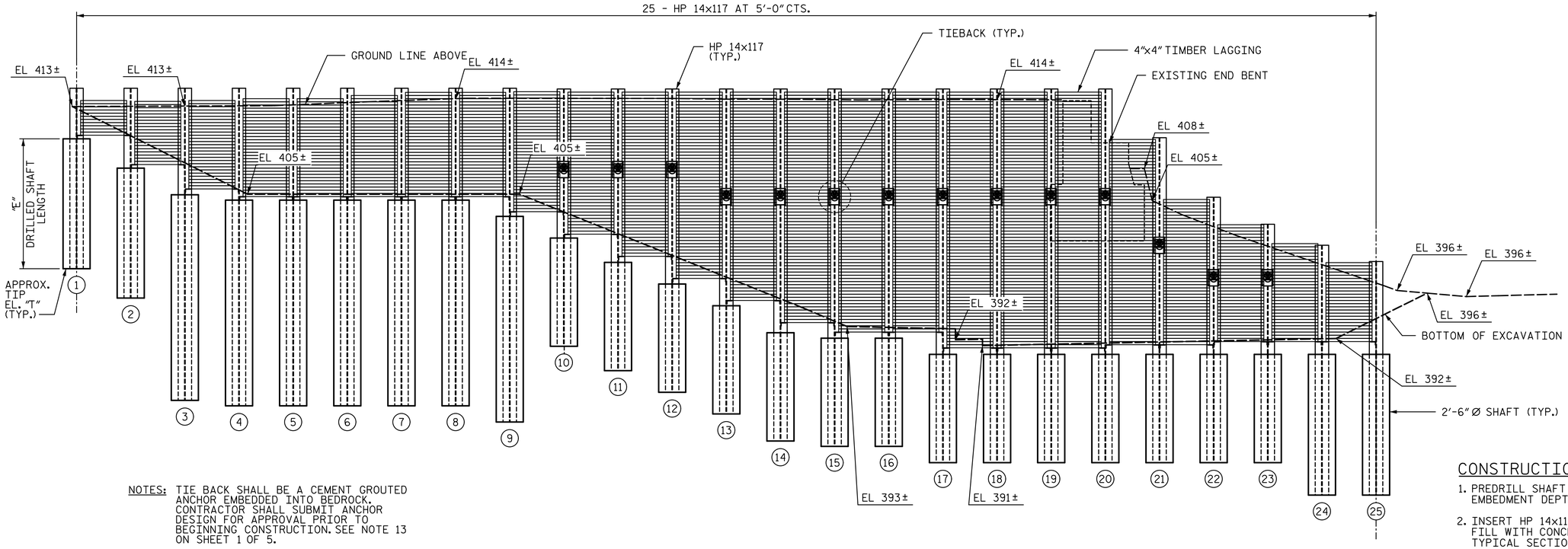

NOTES: TIE BACK SHALL BE A CEMENT GROUTED ANCHOR EMBEDDED INTO BEDROCK. CONTRACTOR SHALL SUBMIT ANCHOR DESIGN FOR APPROVAL PRIOR TO BEGINNING CONSTRUCTION. SEE NOTE 13 ON SHEET 1 OF 5.

FOR DETAILS SEE SHEET 5 OF 5.

(1) PILE NUMBER

ELEVATION VIEW-SHORING 1

(VIEWED FROM FILL FACE)

SHORING 1 TABLE

PILE	"T"	"E"	"H"
1	398.0±	12'-0"	
2	395.0±	12'-0"	
3	386.0±	19'-0"	
4	386.0±	19'-0"	
5	386.0±	19'-0"	
6	386.0±	19'-0"	
7	386.0±	19'-0"	
8	386.0±	19'-0"	
9	384.0±	19'-0"	
10	391.0±	10'-0"	6'-6"
11	388.0±	10'-0"	6'-6"
12	386.0±	10'-0"	6'-6"
13	384.0±	10'-0"	9'-0"
14	382.0±	10'-0"	9'-0"
15	381.0±	10'-0"	9'-0"
16	381.0±	10'-0"	9'-0"
17	380.0±	10'-0"	9'-0"
18	380.0±	10'-0"	9'-0"
19	380.0±	10'-0"	9'-0"
20	380.0±	10'-0"	9'-0"
21	380.0±	10'-0"	9'-0"
22	380.0±	10'-0"	7'-0"
23	380.0±	10'-0"	4'-0"
24	377.0±	13'-0"	
25	377.0±	13'-0"	

SEE SHEET 5 OF 5 FOR DIMENSIONS "E" AND "H".

CONSTRUCTION SEQUENCE SHORING 1:

1. PREDRILL SHAFT HOLE TO THE REQUIRED EMBEDMENT DEPTH SHOWN ON PLANS.
2. INSERT HP 14x117 INTO PREDRILLED HOLES AND FILL WITH CONCRETE AS DETAILED IN THE TYPICAL SECTION. FILL REMAINING SHAFT WITH EXCAVATABLE FLOWABLE FILL TO GROUND LINE.
3. EXCAVATE ONLY AS REQUIRED TO A MAXIMUM DEPTH OF 5'-0" TO INSTALL AND/OR ADVANCE TIMBER LAGGING.
4. INSTALL TIEBACK ANCHORS AS DETAILED BEFORE EXCAVATION HEIGHT EXCEEDS 10'-0".
5. CONTINUE EXCAVATION AS REQUIRED TO INSTALL AND/OR ADVANCE TIMBER LAGGING TO BOTTOM OF EXCAVATION TO A MAXIMUM OF 23'.

REMOVAL SEQUENCE SHORING 1:

1. EXCAVATE AND REMOVE TIMBER LAGGING.
2. EXCAVATE TO 4' BELOW TIEBACK/PILE CONNECTION OR PROPOSED GROUND LINE.
3. REMOVE TIEBACKS AS NECESSARY.
4. EXCAVATE TO PROPOSED GROUND LINE.
5. REMOVE PILES AND TIEBACK ANCHORS TO 2' BELOW PROPOSED GROUND LINE

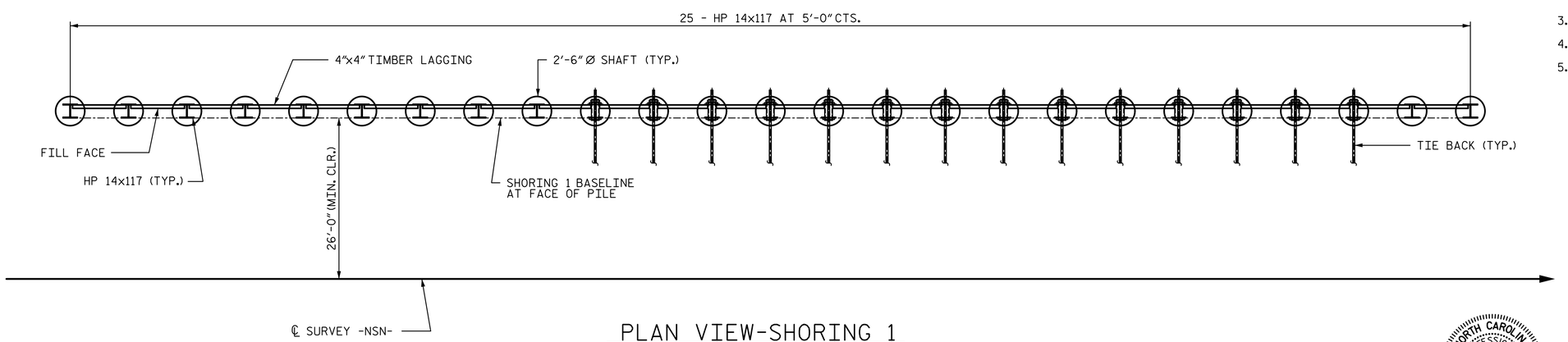

PLAN VIEW-SHORING 1

(FOR SHORING LOCATION, SEE SHEET 1 OF 5)

NOTES:

1. FOR NOTES SEE SHEET 1 OF 5.

PROJECT NO. U-3308

DURHAM COUNTY

STATION: POT 24+09.63 -LALT-
POT 21+11.43 -NSN-

SHEET 3 OF 5

STATE OF NORTH CAROLINA
DEPARTMENT OF TRANSPORTATION
RALEIGH

TEMPORARY SHORING

DocuSigned by: Paul Kelly Jr 26ADE85DEC6A498...
3/31/2015

NORTH CAROLINA PROFESSIONAL SEAL 19765 ENGINEER PAUL E. KELLY, JR.

DRAWN BY : TRL DATE : 6-14
CHECKED BY : PEK DATE : 6-14

DOCUMENT NOT CONSIDERED FINAL UNLESS ALL SIGNATURES COMPLETED

STV / Ralph Whitehead Associates, Inc.
900 W Trade Street, Suite 715
Charlotte, NC 28202
NC License No. F-0991

REVISIONS						SHEET NO.
NO.	BY:	DATE:	NO.	BY:	DATE:	S3-42
1			3			TOTAL SHEETS
2			4			44

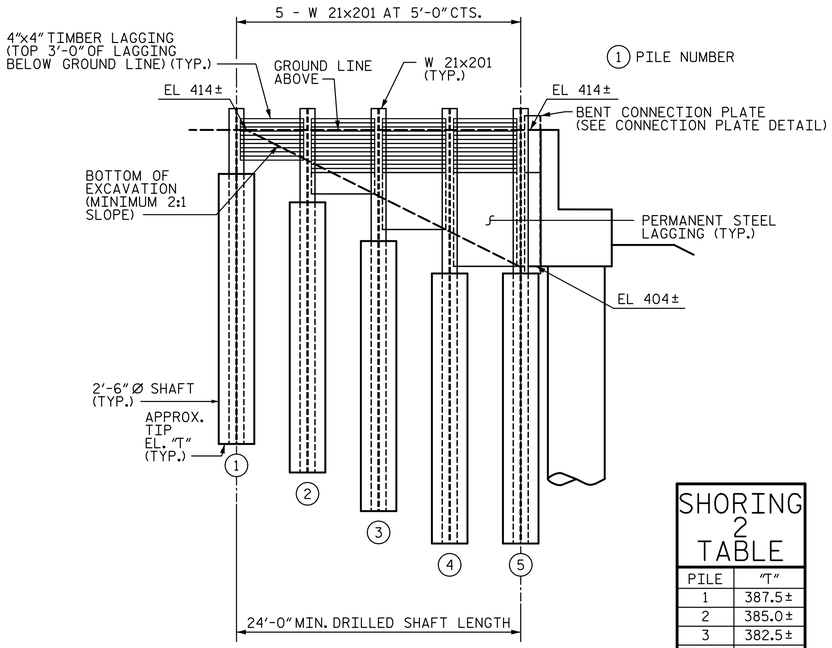

SHORING 2 TABLE	
PILE	"T"
1	387.5±
2	385.0±
3	382.5±
4	379.5±
5	379.5±

ELEVATION VIEW-SHORING 2

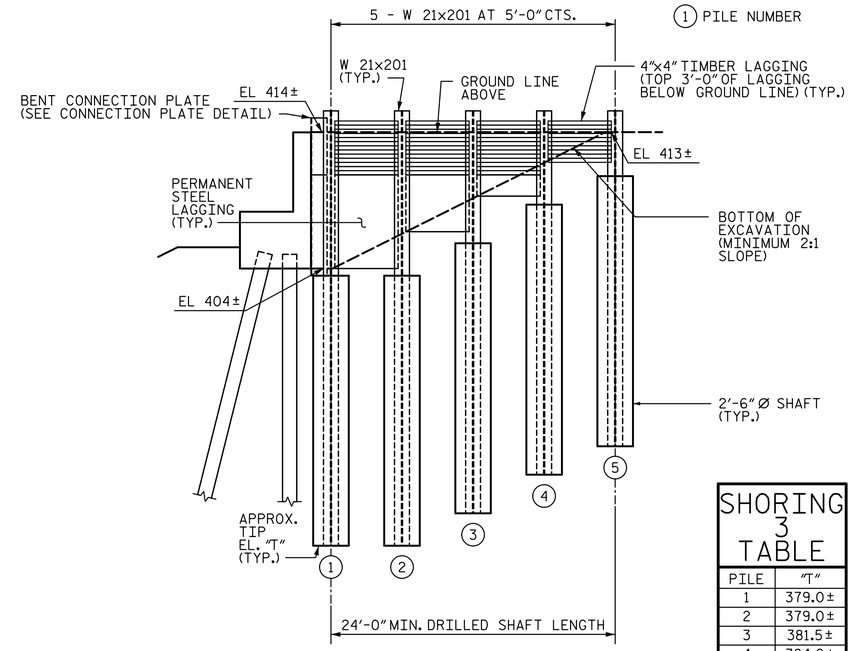

SHORING 3 TABLE	
PILE	"T"
1	379.0±
2	379.0±
3	381.5±
4	384.0±
5	386.5±

ELEVATION VIEW-SHORING 3

NOTES:

1. FOR NOTES SEE SHEET 1 OF 5.
2. FOR DETAILS SEE SHEET 5 OF 5.

CONSTRUCTION SEQUENCE SHORING 2 AND 3:

1. WITH SHORING 1 STILL IN PLACE AND PRIOR TO BACKFILLING BEHIND ABUTMENTS, PREDRILL SHAFT HOLE TO THE REQUIRED EMBEDMENT DEPTH SHOWN ON PLANS.
2. INSERT W 21x201 INTO PREDRILLED HOLES AND FILL WITH CONCRETE TO THE DEPTH SHOWN.
3. INSTALL STEEL LAGGING TO WITHIN 3'-0" OF FINISHED GROUND SURFACE. WELD LAGGING AS SHOWN IN THE STEEL LAGGING DETAIL.
4. INSTALL BENT CONNECTION PLATE AS SHOWN IN THE BENT CONNECTION PLATE DETAIL.
5. BACKFILL BEHIND SHORING IN 1'-0" MAXIMUM LIFTS. COMPACT SOIL BEHIND WALL PER CONTRACT DOCUMENTS. USE HAND COMPACTION NEAR SHORING. BACKFILL TO WITHIN 3'-0" OF FINISHED GROUND ELEVATION.
6. INSTALL TIMBER LAGGING AND PROCEED WITH BACKFILL/COMPACTION UNTIL FINISHED GRADE IS ATTAINED.
7. AFTER BACKFILL IS COMPLETED, EXCAVATE IN FRONT OF SHORING AS SHOWN ON SHEET 2 OF 5.

REMOVAL SEQUENCE SHORING 2 AND 3:

1. EXCAVATE 3'-0" AND REMOVE/CUT TIMBER LAGGING, UPPER PORTTION OF THE BENT CONNECTOR PLATE, W 21x201 TO 3'-0" BELOW FINISHED GROUND LINE.
2. BACKFILL EXCAVATED AREA TO FINISHED GROUND ELEVATION AND HAND COMPACT SOIL IN 1'-0" MAXIMUM LIFTS.

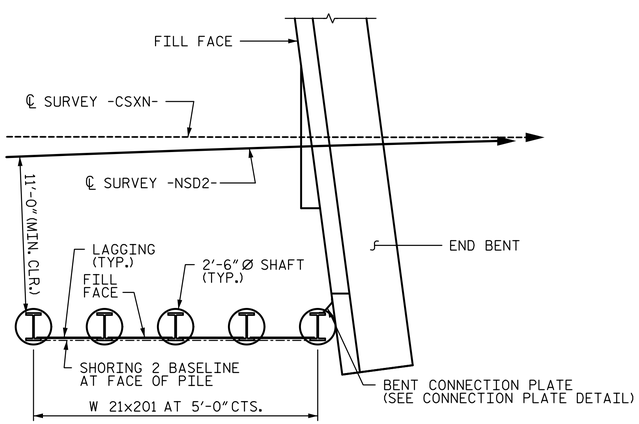

PLAN VIEW-SHORING 2

(FOR SHORING LOCATION, SEE SHEET 2 OF 5)

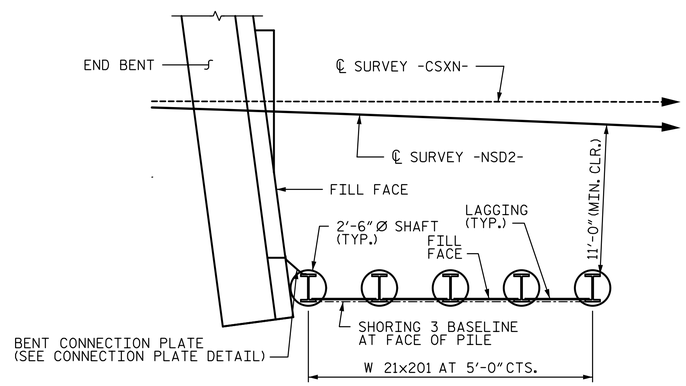

PLAN VIEW-SHORING 3

(FOR SHORING LOCATION, SEE SHEET 2 OF 5)

PROJECT NO. U-3308

DURHAM COUNTY

STATION: POT 24+09.63 -LALT-
POT 21+11.43 -NSN-

SHEET 4 OF 5

STATE OF NORTH CAROLINA
DEPARTMENT OF TRANSPORTATION
RALEIGH

TEMPORARY SHORING

DocuSigned by: Paul Kelly Jr. 26ADE85DEC6A498...

NORTH CAROLINA PROFESSIONAL SEAL 19765 ENGINEER PAUL E. KELLY, JR.

3/31/2015

REVISIONS						
NO.	BY:	DATE:	NO.	BY:	DATE:	
1			3			
2			4			

SHEET NO. S3-43

TOTAL SHEETS 44

DOCUMENT NOT CONSIDERED FINAL UNLESS ALL SIGNATURES COMPLETED

STV / Ralph Whitehead Associates, Inc.
900 W Trade Street, Suite 715
Charlotte, NC 28202
NC License No. F-0991

DRAWN BY : TRL/TJT DATE : 6-14
CHECKED BY : PEK DATE : 6-14

alveyac 3/30/2015 1:40:25 PM I:\PROJ\25325\ustation\struct\Final\403_043_U3308_SMU_TPS04.dgn

NOTES:

1. FOR NOTES SEE SHEET 1 OF 5.

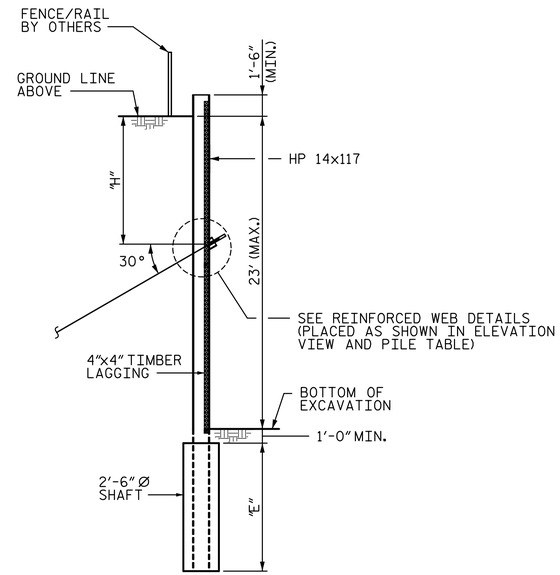

TYPICAL SECTION - SHORING 1

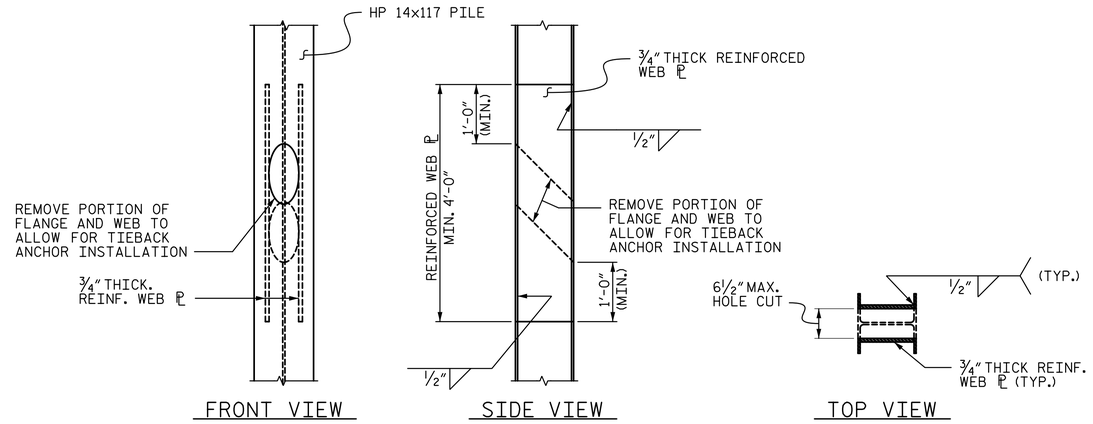

REINFORCED WEB DETAILS

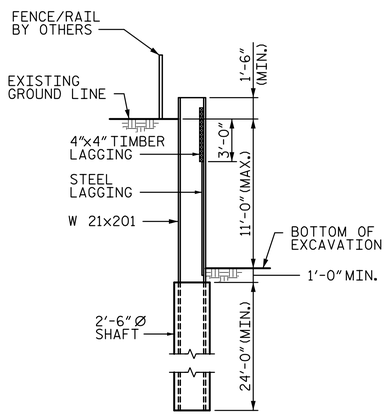

TYPICAL SECTION - SHORING 2 & 3

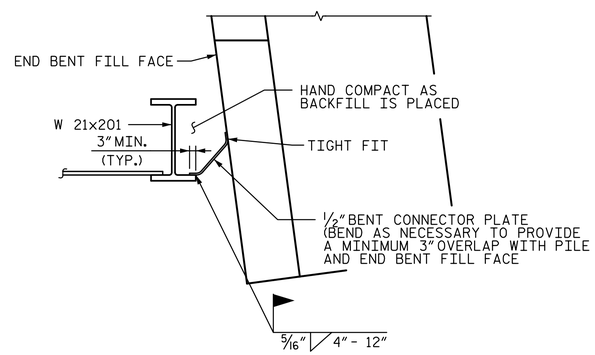

CONNECTOR PLATE DETAIL

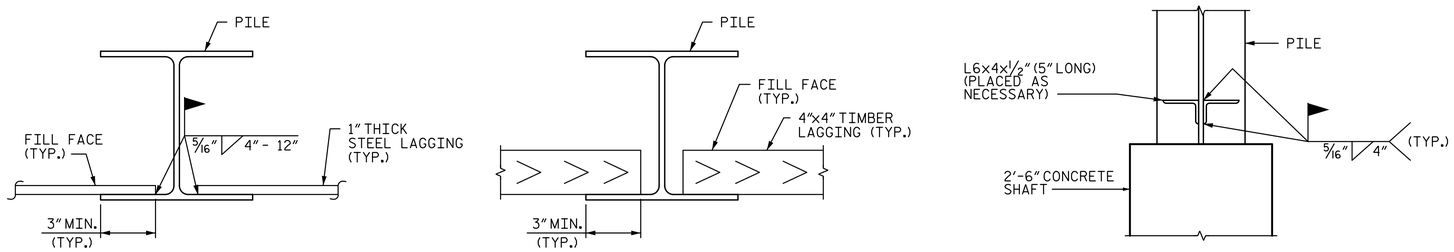

PILE & STEEL

PILE & TIMBER

LAGGING DETAIL

LAGGING STOP

PROJECT NO. U-3308

DURHAM COUNTY

STATION: POT 24+09.63 -LALT-
POT 21+11.43 -NSN-

SHEET 5 OF 5

STATE OF NORTH CAROLINA
DEPARTMENT OF TRANSPORTATION
RALEIGH

TEMPORARY SHORING

DocuSigned by: Paul Kelly Jr. 26ADE85DEC6A498...

NORTH CAROLINA PROFESSIONAL SEAL 19765 ENGINEER PAUL E. KELLY, JR.

3/31/2015

REVISIONS								
NO.	BY:	DATE:	NO.	BY:	DATE:		SHEET NO.	
1			3				S3-44	
2			4				TOTAL SHEETS	
							44	

DRAWN BY : TRL/TJT DATE : 6-14
CHECKED BY : PEK DATE : 6-14

DOCUMENT NOT CONSIDERED FINAL UNLESS ALL SIGNATURES COMPLETED

STV / Ralph Whitehead Associates, Inc.
900 W Trade Street, Suite 715
Charlotte, NC 28202
NC License No. F-0991