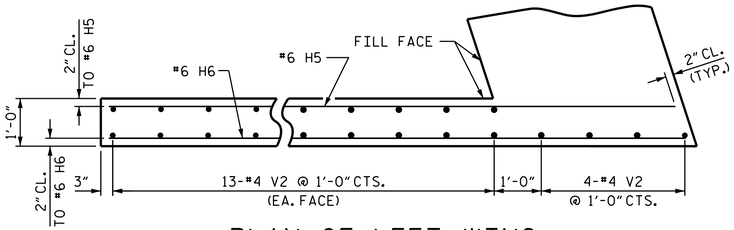

PLAN OF LEFT WING

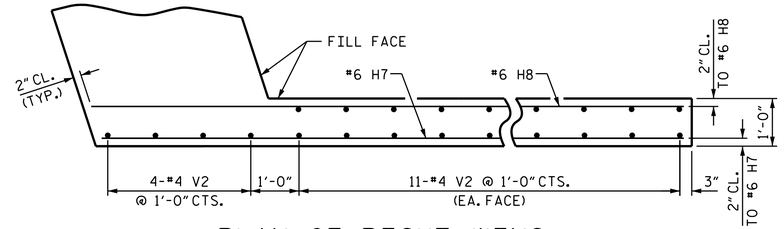

PLAN OF RIGHT WING

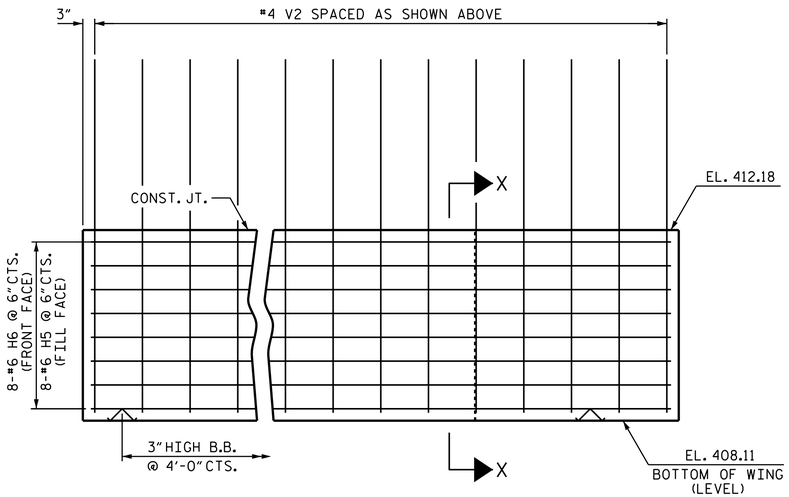

ELEVATION OF LEFT WING

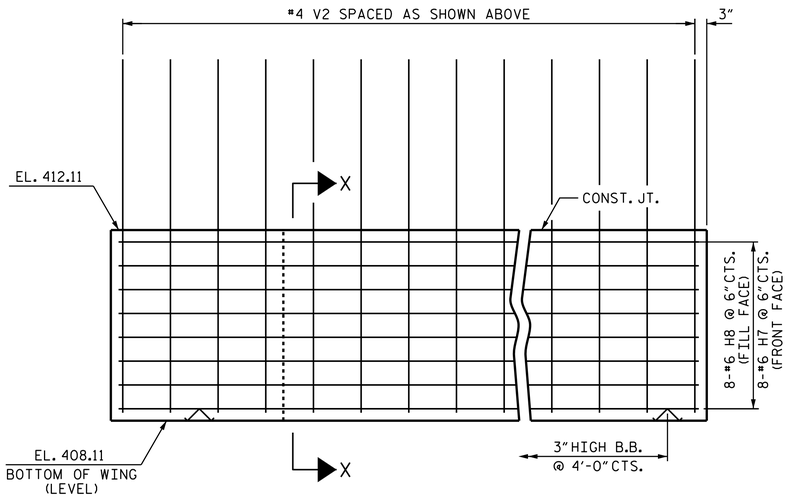

ELEVATION OF RIGHT WING

BAR TYPES

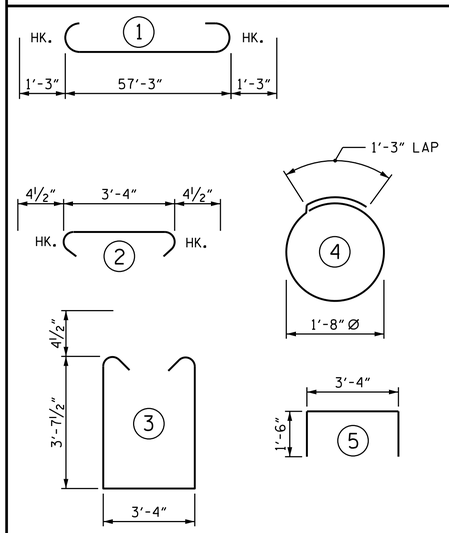

ALL BAR DIMENSIONS ARE OUT TO OUT.

BILL OF MATERIAL

END BENT 2

BAR	NO.	SIZE	TYPE	LENGTH	WEIGHT
B1	10	#9	1	59'-9"	2032
B2	20	#4	STR	29'-11"	400
B3	5	#4	STR	14'-5"	48
B4	14	#4	STR	3'-4"	31
H5	8	#6	STR	16'-0"	192
H6	8	#6	STR	16'-1"	193
H7	8	#6	STR	14'-2"	170
H8	8	#6	STR	14'-3"	171
S1	100	#4	3	11'-4"	757
S2	100	#4	2	4'-1"	273
S3	32	#4	4	6'-6"	139
U1	12	#4	5	6'-4"	51
V1	102	#4	STR	6'-2"	420
V2	56	#4	STR	9'-3"	346
REINFORCING STEEL				LBS.	5,223
CLASS A CONCRETE				C.Y.	37.4
HP 12 X 53 STEEL PILES NO. 8				LIN. FT.	320

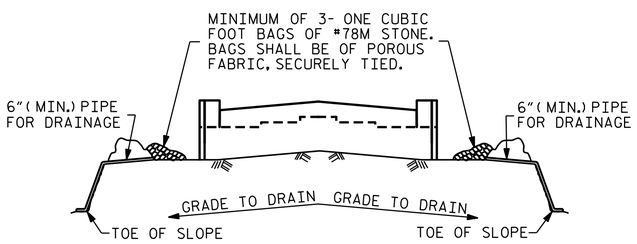

BAGGED STONE AND PIPE SHALL BE PLACED IMMEDIATELY AFTER COMPLETION OF END BENT EXCAVATION. PIPE MAY BE EITHER CONCRETE, CORRUGATED STEEL, CORRUGATED ALUMINUM ALLOY, OR CORRUGATED PLASTIC. PERFORATED PIPE WILL NOT BE ALLOWED.

BAGGED STONE SHALL REMAIN IN PLACE UNTIL THE ENGINEER DIRECTS THAT IT BE REMOVED. THE CONTRACTOR SHALL REMOVE AND DISPOSE OF SILT ACCUMULATIONS AT BAGGED STONE WHEN SO DIRECTED BY THE ENGINEER. BAGS SHALL BE REMOVED AND REPLACED WHENEVER THE ENGINEER DETERMINES THAT THEY HAVE DETERIORATED AND LOST THEIR EFFECTIVENESS.

NO SEPARATE PAYMENT WILL BE MADE FOR THIS WORK AND THE ENTIRE COST OF THIS WORK SHALL BE INCLUDED IN THE UNIT CONTRACT PRICE BID FOR THE SEVERAL PAY ITEMS.

TEMPORARY DRAINAGE AT END BENT

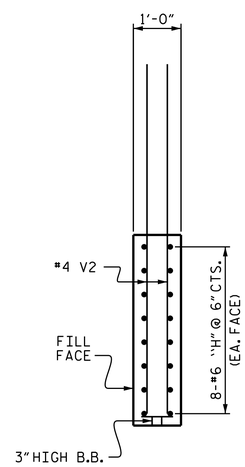

SECTION X-X

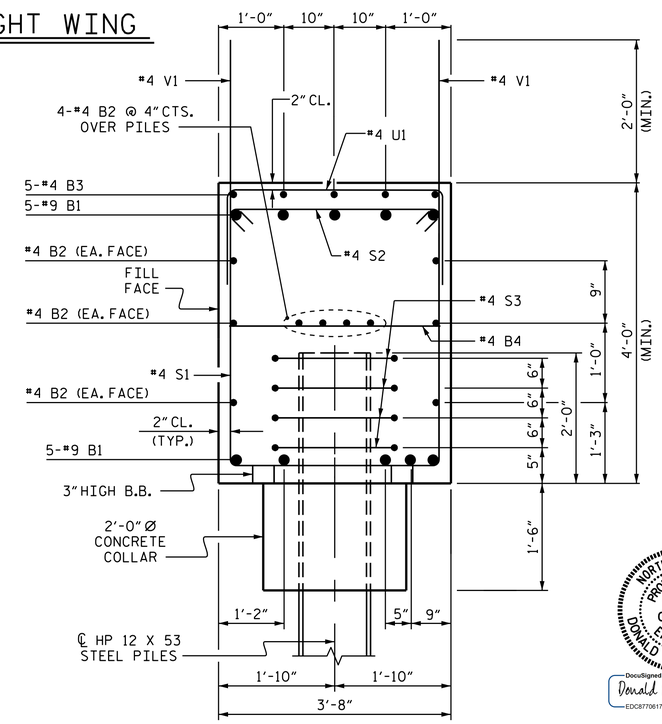

SECTION A-A

PROJECT NO. U-3308

DURHAM COUNTY

STATION: 23+00.86 -LALT-

SHEET 2 OF 2

STATE OF NORTH CAROLINA
DEPARTMENT OF TRANSPORTATION
RALEIGH

SUBSTRUCTURE

INTEGRAL END BENT 2

NORTH CAROLINA PROFESSIONAL SEAL 031480 ENGINEER DONALD R. SMITH, JR.

DocuSigned by: Donald R. Smith, Jr
EDC87706174B490...
4/1/2016

DOCUMENT NOT CONSIDERED FINAL UNLESS ALL SIGNATURES COMPLETED

REVISIONS						SHEET NO.
NO.	BY:	DATE:	NO.	BY:	DATE:	S2-29
1			3			TOTAL SHEETS
2			4			32

STR. #2

DRAWN BY : J.D. HAWK DATE : 8/13/14
CHECKED BY : P.S. ADKINS DATE : 9/3/14
DESIGN ENGINEER OF RECORD: D.R. SMITH DATE : 11/3/14

22-MAR-2016 11:36
R:\Structures\Plans\str2\U3308_SD_E2_02.dgn
jdhawk