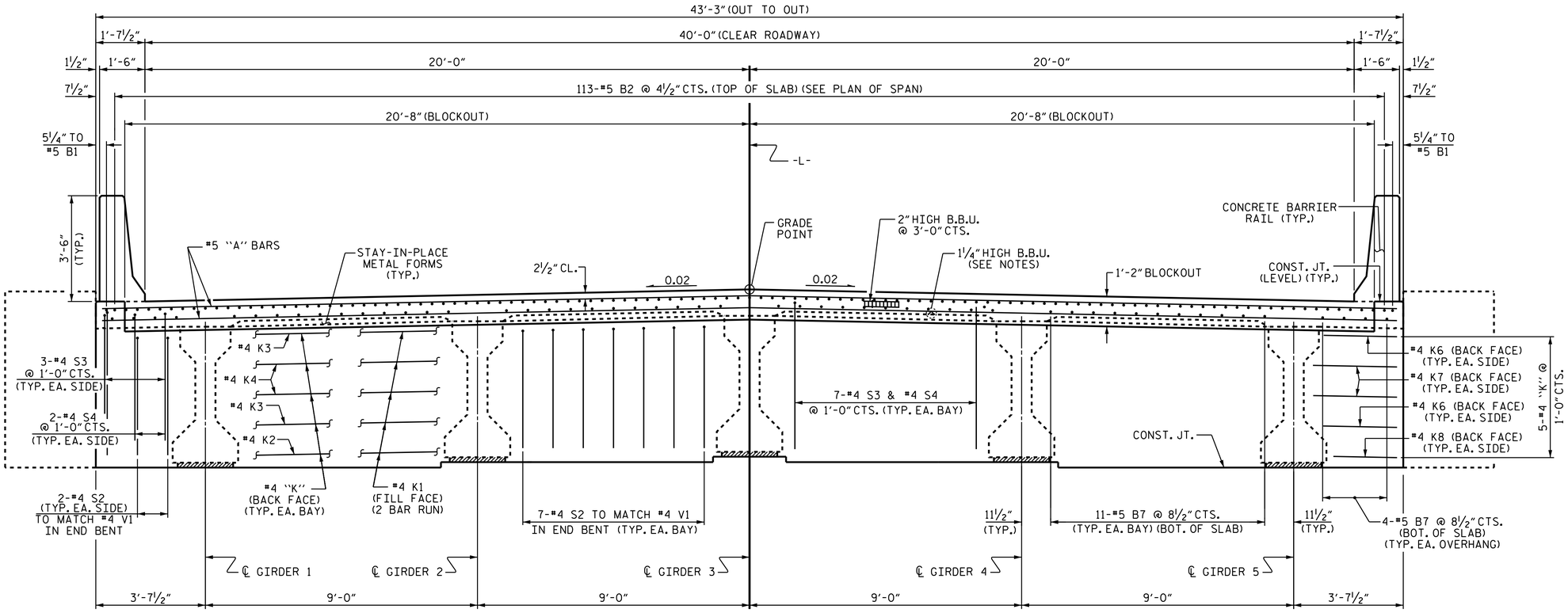

TYPICAL SECTION @ INTEGRAL END BENT

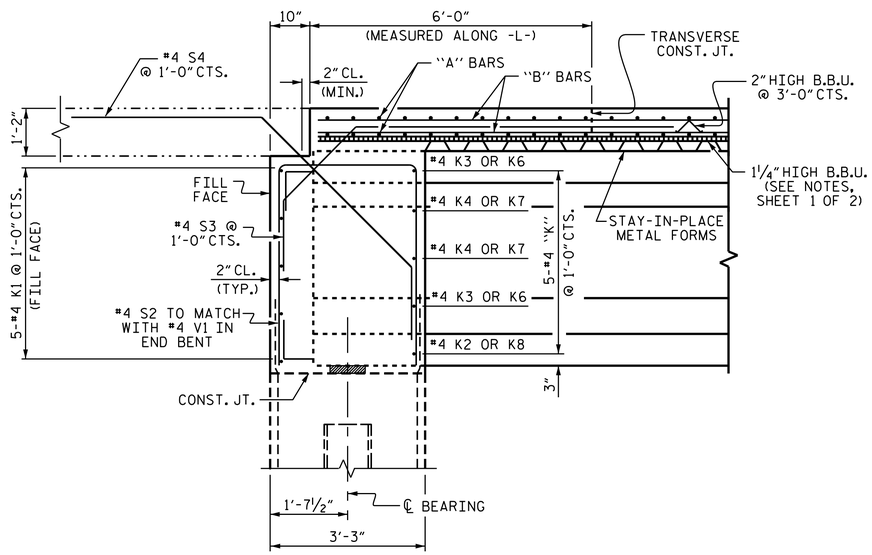

SECTION THROUGH INTEGRAL END BENT

PROJECT NO. B-4766

IREDELL COUNTY

STATION: 16+28.00 -L-

SHEET 2 OF 2

STATE OF NORTH CAROLINA
DEPARTMENT OF TRANSPORTATION
RALEIGH

SUPERSTRUCTURE

TYPICAL SECTION

NORTH CAROLINA PROFESSIONAL SEAL 28950 ENGINEER HYEN P. KIM

DocuSigned by: Hyen Kim 07A7857E44145F...

4/22/2016

REVISIONS						
NO.	BY:	DATE:	NO.	BY:	DATE:	
1			3			
2			4			

SHEET NO. S-6

TOTAL SHEETS 26

DOCUMENT NOT CONSIDERED FINAL UNLESS ALL SIGNATURES COMPLETED

DRAWN BY : J. K. BOWLES DATE : 8/24/15
CHECKED BY : N. D'AIUTO DATE : 9/14/15
DESIGN ENGINEER OF RECORD: H. P. KIM DATE : 1/26/16

20-APR-2016 09:27
R:\Structures\Plans\B4766_SD_TS_01.dgn
vpatel