PROJECT REFERENCE NO.	SHEET NO.
B-4766	2A-1

ROADWAY DESIGN ENGINEER
NORTH CAROLINA PROFESSIONAL SEAL 020111 ENGINEER NIYAL K. BOAYUE
DocuSigned by: 4/13/2016
APPROVED BY

PAVEMENT DESIGN ENGINEER
NORTH CAROLINA PROFESSIONAL SEAL 022896 ENGINEER CLARK S. MORRISON
DocuSigned by: Clark S. Morrison 4/14/2016
APPROVED BY

DOCUMENT NOT CONSIDERED FINAL UNLESS ALL SIGNATURES COMPLETED

PAVEMENT SCHEDULE

(FINAL PAVEMENT DESIGN)

C1	PROP. APPROX. 1 1/2" ASPHALT CONCRETE SURFACE COURSE, TYPE S9.5B, AT AN AVERAGE RATE OF 168 LBS. PER SQ. YD.
C2	PROP. APPROX. 3" ASPHALT CONCRETE SURFACE COURSE, TYPE S9.5B, AT AN AVERAGE RATE OF 168 LBS. PER SQ. YD. IN EACH OF TWO LAYERS.
D1	PROP. APPROX. 3" ASPHALT CONCRETE INTERMEDIATE COURSE, TYPE I19.0B, AT AN AVERAGE RATE OF 342 LBS. PER SQ. YD.
E1	PROP. APPROX. 4" ASPHALT CONCRETE BASE COURSE, TYPE B25.0B, AT AN AVERAGE RATE OF 456 LBS. PER SQ. YD.
R	CONCRETE SHOULDER BERM GUTTER. (SEE DETAIL 2C-2)
U	EXISTING PAVEMENT.
T	EARTH MATERIAL.

NOTE: PAVEMENT EDGE SLOPES ARE 1:1 UNLESS SHOWN OTHERWISE.

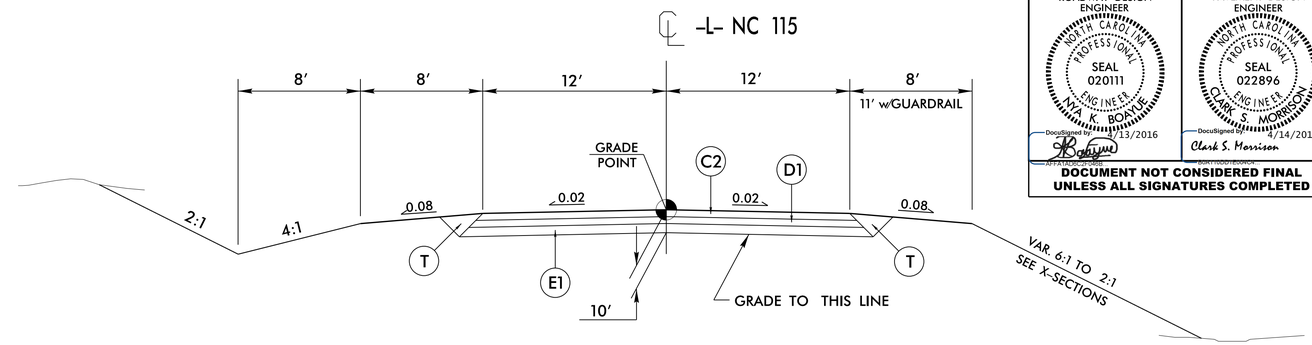

TYPICAL SECTION NO. 1

USE TYPICAL SECTION NO. 1
-L- STA. 13+32.00 TO STA. 15+53.00 (END BRIDGE)
-L- STA. 17+03.00 (BEGIN BRIDGE) TO STA. 19+00.00

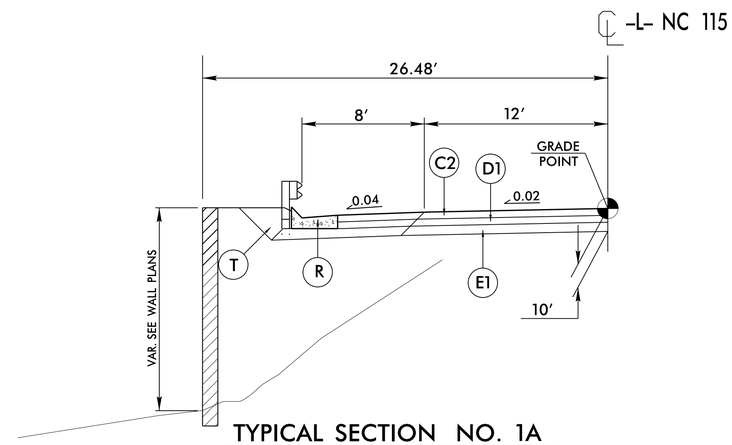

TYPICAL SECTION NO. 1A

NOTE: LOCATION OF RETAINING WALL
-L- LT. STA. 16+91.25 TO STA. 18+30.00
USE T.S. No. 1A IN CONJUNCTION WITH T.S. No. 1

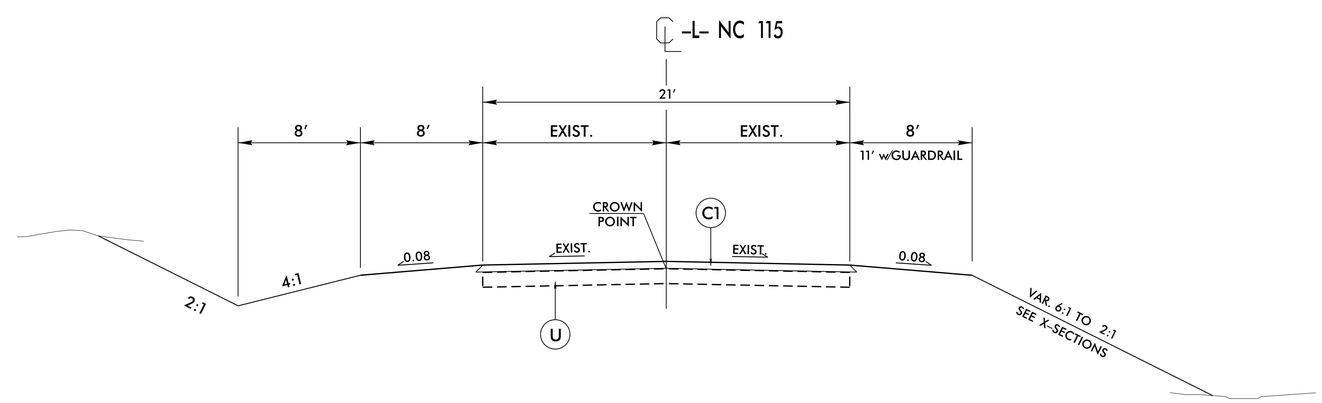

TYPICAL SECTION NO. 2

USE TYPICAL SECTION NO. 2
-L- STA. 19+00.00 TO STA. 21+00.00

6/2/99

18-MAR-2016 14:50
R:\Roadway\Proj\B4766_RDY_TYP.dgn
$$$$USERNAME$$$$