STATE	STATE PROJECT REFERENCE NO.	SHEET NO.	TOTAL SHEETS
N.C.	U-3308	1	

STATE PROJ. NO.	F. A. PROJ. NO.	DESCRIPTION
34915.1.1	STP-0055(20)	PE
34915.2.1	STP-0055(20)	R/W
34915.2.U1	STP-0055(20)	UTILITIES
34915.3.FR1	STP-0055(20)	CONST.

STATE OF NORTH CAROLINA
DIVISION OF HIGHWAYS

DURHAM COUNTY

LOCATION: NC 55 (ALSTON AVE.) FROM NC 147 (I. L. "BUCK" DEAN FREEWAY) TO NORTH OF US 70 BUS/NC 98 (HOLLOWAY ST.)

TYPE OF WORK: Grading, Drainage, Curb & Gutter, Paving, Sidewalks, Retaining Walls, Structures, Railroad Track Work and Signals

See Sheet 1-A For Index of Sheets
See Sheet 1-B For CONVENTIONAL SYMBOLS

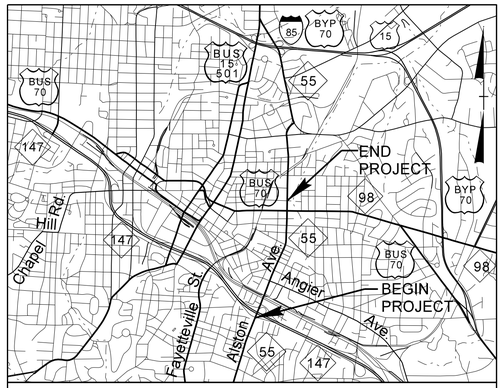

VICINITY MAP

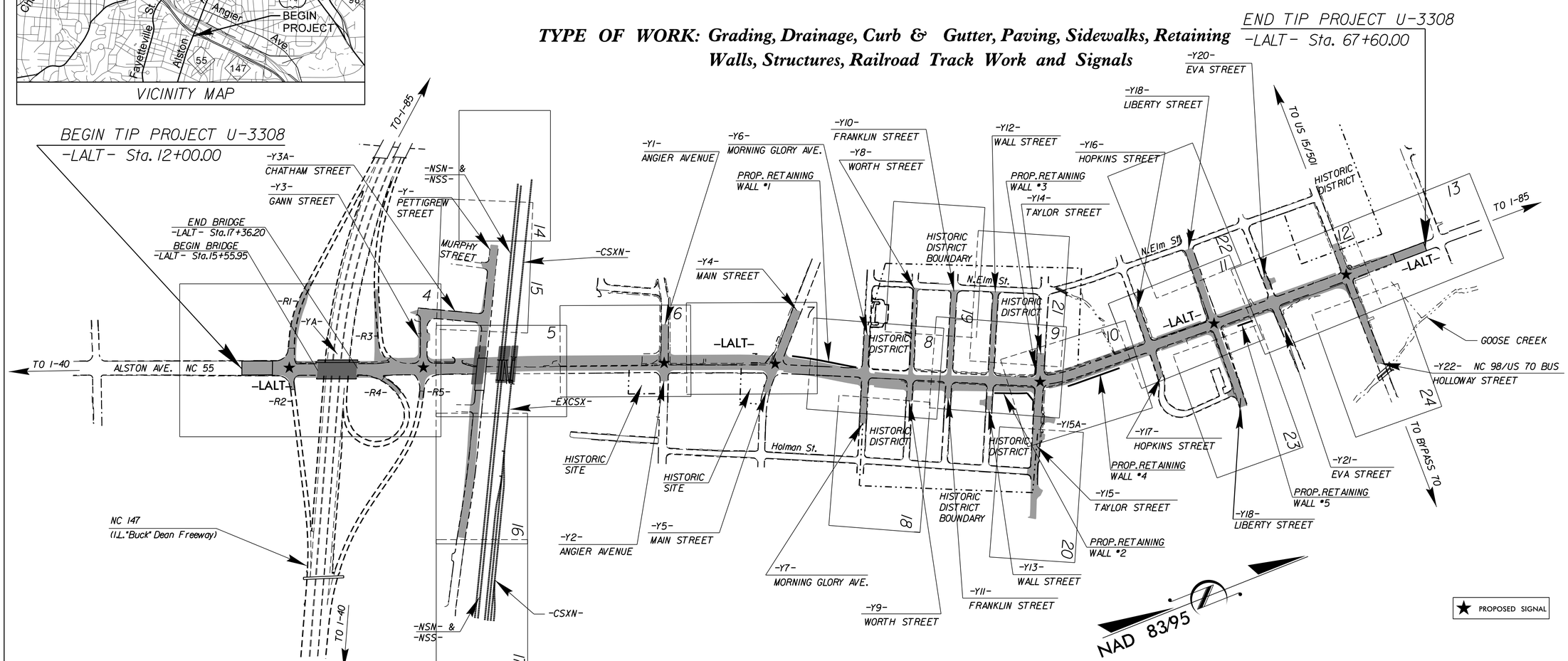

GRAPHIC SCALES

20 10 0 20 40 — PLANS

20 10 0 20 40 — PROFILE (HORIZONTAL)

10 5 0 10 20 — PROFILE (VERTICAL)

DESIGN DATA

ADT 2016 = 25400 VPD
ADT 2036 = 32800 VPD
K = 9 %
D = 55 %
T = 7 % *
V = 35 MPH
* TTST 1% DUAL 6%
Minor Arterial
Regional Tier

PROJECT LENGTH

LENGTH ROADWAY TIP PROJECT U-3308 = 1.019 mi
LENGTH STRUCTURE TIP PROJECT U-3308 = 0.034 mi
TOTAL LENGTH TIP PROJECT U-3308 = 1.053 mi

Prepared in the Office of:
DIVISION OF HIGHWAYS
1000 Birch Ridge Dr., Raleigh NC, 27610

2012 STANDARD SPECIFICATIONS

RIGHT OF WAY DATE: APRIL 30, 2013

LETTING DATE: JUNE 21, 2016

JAMES A. SPEER, PE — PROJECT ENGINEER

ALLISON K. WHITE — PROJECT DESIGN ENGINEER

HYDRAULICS ENGINEER
DocuSigned by: William H. Elam, Jr. 3/7/2016 P.E.
SIGNATURE:
NORTH CAROLINA PROFESSIONAL SEAL 019721 ENGINEER WILLIAM H. ELAM, JR.

ROADWAY DESIGN ENGINEER
DocuSigned by: James Speer 3/7/2016 P.E.
SIGNATURE:
NORTH CAROLINA PROFESSIONAL SEAL 014571 ENGINEER James A. Speer

STATE OF NORTH CAROLINA DEPARTMENT OF TRANSPORTATION

TIP PROJECT: U-3308

CONTRACT: C203567

07-MAR-2016 10:41
R:\Roadway\Proj\u3308_rdy_tsh.dgn
$$$$USERNAME$$$$

PROJECT REFERENCE NO.	SHEET NO.
U-3308	1-A

ROADWAY DESIGN ENGINEER
NORTH CAROLINA PROFESSIONAL SEAL 014571 ENGINEER James A. Speer
DocuSigned James Speer 5/18/2016
3463DDD7D4A6493...

INDEX OF SHEETS

SHEET NUMBER	SHEET
1	TITLE SHEET
1A	INDEX OF SHEETS, GENERAL NOTES, AND STANDARD DRAWINGS
1B	CONVENTIONAL SYMBOLS
1C-1 THRU 1C-10	SURVEY CONTROL SHEETS
2A-1 THRU 2A-14	PAVEMENT SCHEDULE AND TYPICAL SECTIONS
2B-1 THRU 2B-7	ROADWAY DETAILS
2C-1 THRU 2C-21	SPECIAL DETAILS
2H-1	STOCKPILE CONTAINMENT DETAIL
3B-1 THRU 3B-3	ROADWAY SUMMARIES (Earthwork, Guardrail, Asphalt Pavement Removal, Concrete Pavement Removal)
3D-1 THRU 3D-12	DRAINAGE SUMMARIES
3G-1	GEOTECH SUMMARIES
3P-1 THRU 3P-2	PARCEL INDEX SHEET
4 THRU 39	PLAN AND PROFILE SHEET
TMP-1 THRU TMP-28	TRAFFIC MANAGEMENT PLANS
PMP-1 THRU PMP-9	PAVEMENT MARKING PLANS
E-1 THRU E-5	ELECTRICAL PLANS
EC-1 THRU EC-45	EROSION CONTROL PLANS
RF-1	REFORESTATION PLANS
SIGN-1 THRU SIGN-10	SIGNING PLANS
SIG-1 THRU SIG-P3	SIGNAL PLANS
SCP.1 THRU SCP.18	COMMUNICATIONS CABLE ROUTING
UC-1 THRU UC-49	UTILITIES CONSTRUCTION PLANS
UO-1 THRU UO-24	UTILITIES BY OTHERS
RR-1 THRU X-RR12	TRACKWORK PLANS
X-1A THRU X-1C	CROSS-SECTION SUMMARY SHEET
X-1 THRU X- 119	CROSS-SECTIONS
S-1 THRU S-79	STRUCTURE PLANS
W-1 THRU W-8	RETAINING WALL PLANS

GENERAL NOTES:

2012 SPECIFICATIONS
EFFECTIVE: 01-17-2012
REVISED: 10-31-2014

GRADING AND SURFACING OR RESURFACING AND WIDENING:

THE GRADE LINES SHOWN DENOTE THE FINISHED ELEVATION OF THE PROPOSED SURFACING AT GRADE POINTS SHOWN ON THE TYPICAL SECTIONS. WHERE NO GRADE LINES ARE SHOWN, THE PROFILES SHOWN DENOTE THE TOP ELEVATION OF THE EXISTING PAVEMENT ALONG THE CENTER LINE OF SURVEY ON WHICH THE PROPOSED RESURFACING WILL BE PLACED. GRADE LINES MAY BE ADJUSTED BY THE ENGINEER IN ORDER TO SECURE A PROPER TIE-IN.

CLEARING:

CLEARING ON THIS PROJECT SHALL BE PERFORMED TO THE LIMITS ESTABLISHED BY METHOD III.

SUPERELEVATION:

ALL CURVES ON THIS PROJECT SHALL BE SUPERELEVATED IN ACCORDANCE WITH STD. NO. 225.04 USING THE RATE OF SUPERELEVATION AND RUNOFF SHOWN ON THE PLANS. SUPERELEVATION IS TO BE REVOLVED ABOUT THE GRADE POINTS SHOWN ON THE TYPICAL SECTIONS.

SHOULDER CONSTRUCTION:

ASPHALT, EARTH, AND CONCRETE SHOULDER CONSTRUCTION ON THE HIGH SIDE OF SUPERELEVATED CURVES SHALL BE IN ACCORDANCE WITH STD. NO. 560.01

SIDE ROADS:

THE CONTRACTOR WILL BE REQUIRED TO DO ALL NECESSARY WORK TO PROVIDE SUITABLE CONNECTIONS WITH ALL ROADS, STREETS, AND DRIVES ENTERING THIS PROJECT. THIS WORK WILL BE PAID FOR AT THE CONTRACT UNIT PRICE FOR THE PARTICULAR ITEMS INVOLVED.

UNDERDRAINS:

UNDERDRAINS SHALL BE CONSTRUCTED IN ACCORDANCE WITH STD. NO. 815.03 AT LOCATIONS DIRECTED BY THE ENGINEER.

DRIVEWAYS:

DRIVEWAYS SHALL BE CONSTRUCTED IN ACCORDANCE WITH STD. 848.02 USING 900 MM RADII OR RADII AS SHOWN ON THE PLANS. LOCATIONS OF DRIVES WILL BE AS SHOWN ON THE PLANS OR AS DIRECTED BY THE ENGINEER.

STREET TURNOUT:

STREET RETURNS SHALL BE CONSTRUCTED IN ACCORDANCE WITH STD. NO. 848.04 USING THE RADII NOTED ON PLANS.

GUARDRAIL:

THE GUARDRAIL LOCATIONS SHOWN ON THE PLANS MAY BE ADJUSTED DURING CONSTRUCTION AS DIRECTED BY THE ENGINEER. THE CONTRACTOR SHOULD CONSULT WITH THE ENGINEER PRIOR TO ORDERING GUARDRAIL MATERIAL.

TEMPORARY SHORING:

SHORING REQUIRED FOR THE MAINTENANCE OF TRAFFIC NOT SHOWN ON THE PLANS WILL BE PAID FOR AT THE CONTRACT PRICE FOR "TEMPORARY SHORING".

END BENTS:

THE ENGINEER SHALL CHECK THE STRUCTURE END BENT PLANS, DETAILS, AND CROSS-SECTION PRIOR TO SETTING OF THE SLOPE STAKES FOR THE EMBANKMENT OR EXCAVATION APPROACHING A BRIDGE.

UTILITIES:

UTILITY OWNERS ON THIS PROJECT ARE CITY OF DURHAM - WATER
CITY OF DURHAM - SANITARY SEWER, DUKE ENERGY - POWER (DISTRIBUTION)
DUKE ENERGY - POWER (TRANSMISSION), TIME WARNER CABLE - (CABLE TV)
FRONTIER COMMUNICATIONS - (COMMUNIATIONS), PIEDMONT NATURAL GAS - (NATURAL GAS)
ANY RELOCATION OF EXISTING UTILITIES WILL BE ACCOMPLISHED BY OTHERS, EXCEPT AS SHOWN ON THE PLANS.

RIGHT-OF-WAY MARKERS:

ALL RIGHT-OF-WAY MARKERS ON THIS PROJECT SHALL BE PLACED BY CONTRACT.

CURB RAMPS

CURB RAMPS ARE SHOWN ON THE PLANS AT APPROXIMATE LOCATIONS.
CONSTRUCT ALL CURB RAMPS ACCORDANCE WITH STD 848.05 and/or 848.06.

EFF. 01-17-2012

2012 ROADWAY ENGLISH STANDARD DRAWINGS

REV. 10-30-2012

The following Roadway Standards as appear in "Roadway Standard Drawings" Highway Design Branch - N. C. Department of Transportation - Raleigh, N. C., Dated January, 2012 are applicable to this project and by reference hereby are considered a part of these plans:

STD.NO.	TITLE
DIVISION 2 - EARTHWORK	
200.03	Method of Clearing - Method III
225.03	Deceleration and Acceleration Lanes
225.04	Method of Obtaining Superelevation - Two Lane Pavement
225.06	Method of Grading Sight Distance at Intersections
DIVISION 3 - PIPE CULVERTS	
310.10	Driveway Pipe Construction
DIVISION 4 - MAJOR STRUCTURES	
422.10	Reinforced Bridge Approach Fills
DIVISION 5 - SUBGRADE, BASES AND SHOULDERS	
560.01	Method of Shoulder Construction - High Side of Superelevated Curve - Method I
DIVISION 6 - ASPHALT BASES AND PAVEMENTS	
610.03	Guide for Paving Shoulders Under Bridges - Method III
654.01	Pavement Repairs
DIVISION 7 - CONCRETE PAVEMENTS AND SHOULDERS	
700.05	Tying Proposed Pavement to Existing
DIVISION 8 - INCIDENTALS	
806.01	Concrete Right-of-Way Marker
806.02	Granite Right-of-Way Marker
815.03	Pipe Underdrain and Blind Drain
838.01	Concrete Endwall for Single and Double Pipe Culverts - 15" thru 48" Pipe 90 Skew
838.11	Brick Endwall for Single and Double Pipe Culverts - 15" thru 48" Pipe 90 Skew
838.39	Reinforced Concrete Endwall - for Single 72" Pipe 90 Skew
838.45	Notes for Reinforced Concrete Endwall - Std. Dwg 838.21 thru 838.40
838.69	Reinforced Brick Endwall - for Single 72" Pipe 90 Skew
838.75	Notes for Reinforced Brick Endwall - Std. Dwg 838.51 thru 838.70
838.80	Precast Endwalls - 12" thru 72" Pipe 90 Skew
840.00	Concrete Base Pad for Drainage Structures
840.01	Brick Catch Basin - 12" thru 54" Pipe
840.02	Concrete Catch Basin - 12" thru 54" Pipe
840.03	Frame, Grates and Hood - for Use on Standard Catch Basin
840.04	Concrete Open Throat Catch Basin - 12" thru 48" Pipe
840.05	Brick Open Throat Catch Basin - 12" thru 48" Pipe
840.14	Concrete Drop Inlet - 12" thru 30" Pipe
840.15	Brick Drop Inlet - 12" thru 30" Pipe
840.16	Drop Inlet Frame and Grates - for use with Std. Dwg 840.14 and 840.15
840.25	Anchorage for Frames - Brick or Concrete or Precast
840.30	Driveway Drop Inlet
840.31	Concrete Junction Box - 12" thru 66" Pipe
840.32	Brick Junction Box - 12" thru 66" Pipe
840.34	Traffic Bearing Junction Box - for Use with Pipes 42" and Under
840.36	Traffic Bearing Grated Drop Inlet - for Steel (840.37) Double Frame and Grates
840.37	Steel Grate and Frame
840.45	Precast Drainage Structure
840.46	Traffic Bearing Precast Drainage Structure
840.54	Manhole Frame and Cover
840.66	Drainage Structure Steps
840.71	Concrete and Brick Pipe Plug
840.72	Pipe Collar
846.01	Concrete Curb, Gutter and Curb & Gutter
848.01	Concrete Sidewalk
848.02	Driveway Turnout - Radius Type
848.04	Street Turnout
848.05	Curb Ramp - Proposed Curb & Gutter
852.01	Concrete Islands
852.04	Method for Placement of Drop Inlets in Grassed Median - Using 1'-6" Curb and Gutter
852.05	Median Curb for Catch Basin - for Use with 1'-6" Curb and Gutter
852.06	Method for Placement of Drop Inlets in Concrete Islands
852.10	Median Construction - with Curb and Gutter
857.01	Precast Reinforced Concrete Barrier - 41" Single Faced
862.01	Guardrail Placement
862.02	Guardrail Installation
862.03	Structure Anchor Units (Beg. March 2013 Letting use detail in lieu of Standard)
866.01	Chain Link Fence - 4', 5' and 6' High Fence
876.02	Guide for Rip Rap at Pipe Outlets
876.04	Drainage Ditches with Class 'B' Rip Rap

04/16/11

PROJECT REFERENCE NO.	SHEET NO.
U-3308	1-B

Note: Not to Scale

****S.U.E. = Subsurface Utility Engineering***

STATE OF NORTH CAROLINA
DIVISION OF HIGHWAYS

CONVENTIONAL PLAN SHEET SYMBOLS

BOUNDARIES AND PROPERTY:

- State Line
- County Line
- Township Line
- City Line
- Reservation Line
- Property Line
- Existing Iron Pin — EIP
- Property Corner
- Property Monument — ECM
- Parcel/Sequence Number — 123
- Existing Fence Line
- Proposed Woven Wire Fence
- Proposed Chain Link Fence
- Proposed Barbed Wire Fence
- Existing Wetland Boundary — WLB
- Proposed Wetland Boundary — WLB
- Existing Endangered Animal Boundary — EAB
- Existing Endangered Plant Boundary — EPB
- Known Soil Contamination: Area or Site
- Potential Soil Contamination: Area or Site

BUILDINGS AND OTHER CULTURE:

- Gas Pump Vent or U/G Tank Cap
- Sign — S
- Well — W
- Small Mine
- Foundation
- Area Outline
- Cemetery
- Building
- School
- Church
- Dam

HYDROLOGY:

- Stream or Body of Water
- Hydro, Pool or Reservoir
- Jurisdictional Stream — JS
- Buffer Zone 1 — BZ 1
- Buffer Zone 2 — BZ 2
- Flow Arrow
- Disappearing Stream
- Spring
- Wetland
- Proposed Lateral, Tail, Head Ditch — FLOW
- False Sump

RAILROADS:

- Standard Gauge — CSX TRANSPORTATION
- RR Signal Milepost — MILEPOST 35
- Switch — SWITCH
- RR Abandoned
- RR Dismantled

RIGHT OF WAY:

- Baseline Control Point
- Existing Right of Way Marker
- Existing Right of Way Line
- Proposed Right of Way Line — RW
- Proposed Right of Way Line with Iron Pin and Cap Marker — RW
- Proposed Right of Way Line with Concrete or Granite R/W Marker — RW
- Proposed Control of Access Line with Concrete C/A Marker — CA
- Existing Control of Access — CA
- Proposed Control of Access — CA
- Existing Easement Line — E
- Proposed Temporary Construction Easement — E
- Proposed Temporary Drainage Easement — TDE
- Proposed Permanent Drainage Easement — PDE
- Proposed Permanent Drainage / Utility Easement — DUE
- Proposed Permanent Utility Easement — PUE
- Proposed Temporary Utility Easement — TUE
- Proposed Aerial Utility Easement — AUE
- Proposed Permanent Easement with Iron Pin and Cap Marker

ROADS AND RELATED FEATURES:

- Existing Edge of Pavement
- Existing Curb
- Proposed Slope Stakes Cut — C
- Proposed Slope Stakes Fill — F
- Proposed Curb Ramp — CR
- Existing Metal Guardrail
- Proposed Guardrail
- Existing Cable Guiderail
- Proposed Cable Guiderail
- Equality Symbol
- Pavement Removal

VEGETATION:

- Single Tree
- Single Shrub
- Hedge
- Woods Line
- Orchard
- Vineyard — Vineyard

EXISTING STRUCTURES:

MAJOR:

- Bridge, Tunnel or Box Culvert — CONC
- Bridge Wing Wall, Head Wall and End Wall — CONC WW

MINOR:

- Head and End Wall — CONC HW
- Pipe Culvert
- Footbridge
- Drainage Box: Catch Basin, DI or JB — CB
- Paved Ditch Gutter
- Storm Sewer Manhole — S
- Storm Sewer — S

UTILITIES:

POWER:

- Existing Power Pole
- Proposed Power Pole
- Existing Joint Use Pole
- Proposed Joint Use Pole
- Power Manhole — P
- Power Line Tower
- Power Transformer
- U/G Power Cable Hand Hole
- H-Frame Pole
- Recorded U/G Power Line — P
- Designated U/G Power Line (S.U.E.*) — P

TELEPHONE:

- Existing Telephone Pole
- Proposed Telephone Pole
- Telephone Manhole — T
- Telephone Booth
- Telephone Pedestal — T
- Telephone Cell Tower
- U/G Telephone Cable Hand Hole — HH
- Recorded U/G Telephone Cable — T
- Designated U/G Telephone Cable (S.U.E.*) — T
- Recorded U/G Telephone Conduit — TC
- Designated U/G Telephone Conduit (S.U.E.*) — TC
- Recorded U/G Fiber Optics Cable — T FO
- Designated U/G Fiber Optics Cable (S.U.E.*) — T FO

WATER:

- Water Manhole — W
- Water Meter
- Water Valve
- Water Hydrant
- Recorded U/G Water Line — W
- Designated U/G Water Line (S.U.E.*) — W
- Above Ground Water Line — A/G Water

TV:

- TV Satellite Dish
- TV Pedestal — C
- TV Tower
- U/G TV Cable Hand Hole — HH
- Recorded U/G TV Cable — TV
- Designated U/G TV Cable (S.U.E.*) — TV
- Recorded U/G Fiber Optic Cable — TV FO
- Designated U/G Fiber Optic Cable (S.U.E.*) — TV FO

GAS:

- Gas Valve
- Gas Meter
- Recorded U/G Gas Line — G
- Designated U/G Gas Line (S.U.E.*) — G
- Above Ground Gas Line — A/G Gas

SANITARY SEWER:

- Sanitary Sewer Manhole
- Sanitary Sewer Cleanout
- U/G Sanitary Sewer Line — SS
- Above Ground Sanitary Sewer — A/G Sanitary Sewer
- Recorded SS Forced Main Line — FSS
- Designated SS Forced Main Line (S.U.E.*) — FSS

MISCELLANEOUS:

- Utility Pole
- Utility Pole with Base
- Utility Located Object
- Utility Traffic Signal Box — S
- Utility Unknown U/G Line — ?UTL
- U/G Tank; Water, Gas, Oil
- Underground Storage Tank, Approx. Loc. — UST
- A/G Tank; Water, Gas, Oil
- Geoenvironmental Boring
- U/G Test Hole (S.U.E.*)
- Abandoned According to Utility Records — AATUR
- End of Information — E.O.I.

PROJECT REFERENCE NO.	SHEET NO.
U-3308	1C-1
Location and Surveys	

SURVEY CONTROL SHEET U-3308
DURHAM COUNTY

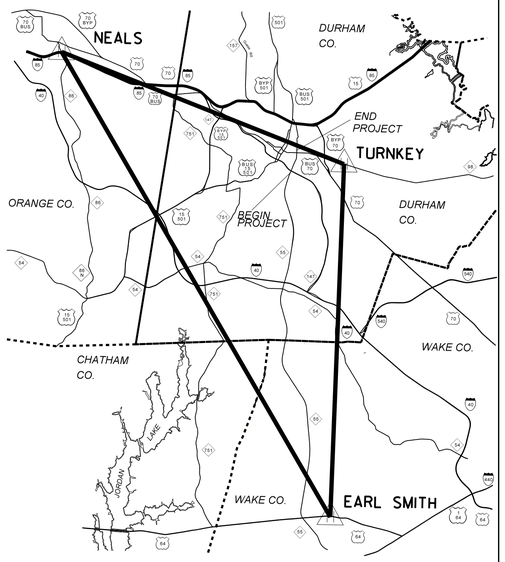

GPS CONTROL NETWORK
NOT TO SCALE

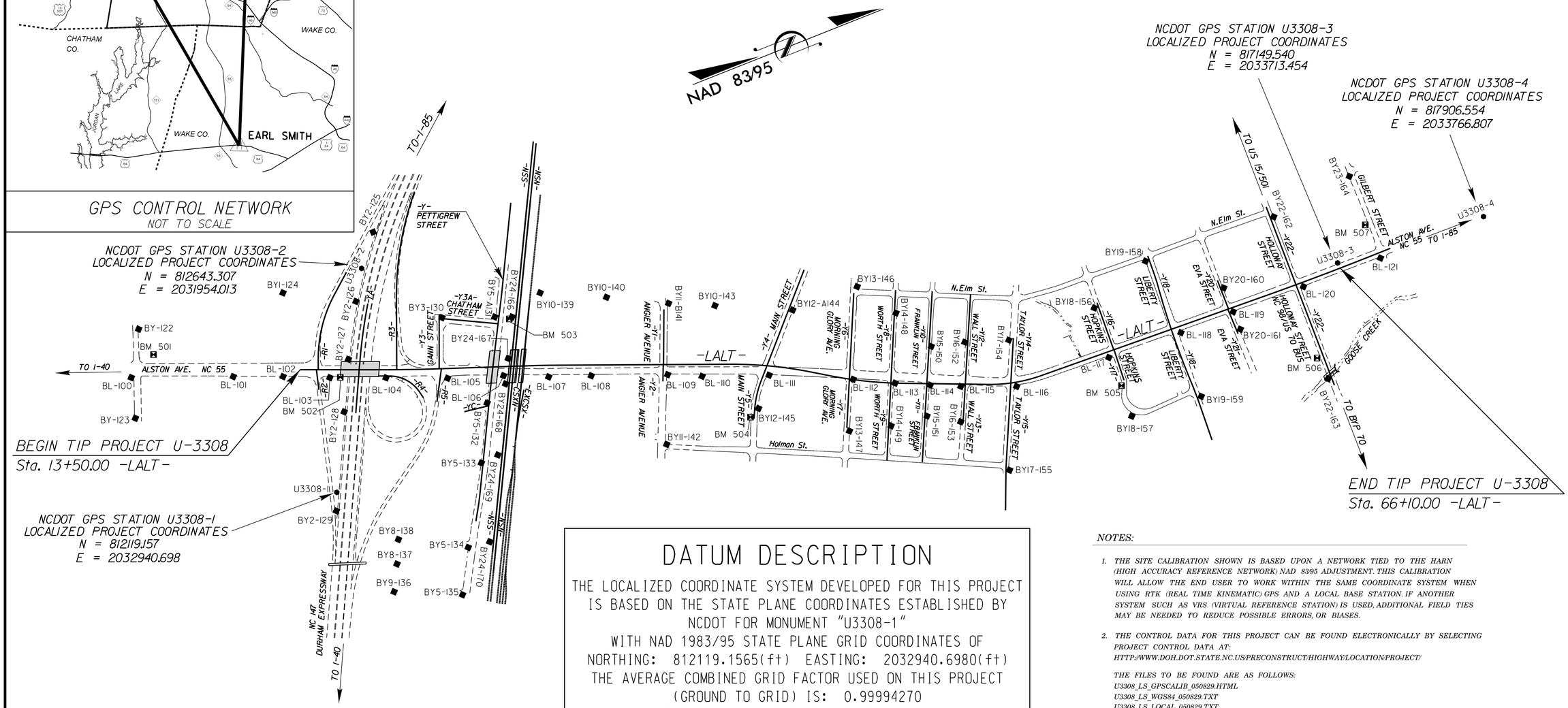

DATUM DESCRIPTION

THE LOCALIZED COORDINATE SYSTEM DEVELOPED FOR THIS PROJECT IS BASED ON THE STATE PLANE COORDINATES ESTABLISHED BY NCDOT FOR MONUMENT "U3308-1"
WITH NAD 1983/95 STATE PLANE GRID COORDINATES OF
NORTHING: 812119.1565(ft) EASTING: 2032940.6980(ft)
THE AVERAGE COMBINED GRID FACTOR USED ON THIS PROJECT (GROUND TO GRID) IS: 0.99994270
THE N.C. LAMBERT GRID BEARING AND LOCALIZED HORIZONTAL GROUND DISTANCE FROM "U3308-1" TO -LALT- STATION 13+50.00 IS N 84° 58' 17.0" W 634.7202 (ft)

ALL LINEAR DIMENSIONS ARE LOCALIZED HORIZONTAL DISTANCES
VERTICAL DATUM USED IS NAVD 88

NOTE: DRAWING NOT TO SCALE

NOTES:

1. *THE SITE CALIBRATION SHOWN IS BASED UPON A NETWORK TIED TO THE HARN (HIGH ACCURACY REFERENCE NETWORK) NAD 8395 ADJUSTMENT. THIS CALIBRATION WILL ALLOW THE END USER TO WORK WITHIN THE SAME COORDINATE SYSTEM WHEN USING RTK (REAL TIME KINEMATIC) GPS AND A LOCAL BASE STATION. IF ANOTHER SYSTEM SUCH AS VRS (VIRTUAL REFERENCE STATION) IS USED, ADDITIONAL FIELD TIES MAY BE NEEDED TO REDUCE POSSIBLE ERRORS, OR BIASES.*

2. *THE CONTROL DATA FOR THIS PROJECT CAN BE FOUND ELECTRONICALLY BY SELECTING PROJECT CONTROL DATA AT:*
HTTP://WWW.DOH.DOT.STATE.NC.US/PRECONSTRUCT/HIGHWAY/LOCATION/PROJECT/

THE FILES TO BE FOUND ARE AS FOLLOWS:
U3308_LS_GPSCALIB_050829.HTML
U3308_LS_WGS84_050829.TXT
U3308_LS_LOCAL_050829.TXT
U3308_LS_CONTROL.TXT

THE WGS84 AND LOCAL FILES ARE COMMA DELIMITED AND CAN BE USED TO REPRODUCE THE SITE CALIBRATION FOR THE END USER'S GPS EQUIPMENT. IF FURTHER INFORMATION IS NEEDED, PLEASE CONTACT THE LOCATION AND SURVEYS UNIT.

● *INDICATES GEODETIC CONTROL MONUMENTS USED OR SET FOR HORIZONTAL PROJECT CONTROL BY THE NCDOT LOCATION AND SURVEYS UNIT.*
PROJECT CONTROL ESTABLISHED USING GLOBAL POSITIONING SYSTEM.
NETWORK ESTABLISHED FROM EXISTING HARN MONUMENTATION
SEE GPS CALIBRATION SHEET FOR HORIZONTAL AND VERTICAL COORDINATE VALUES.

6/2/99

07-MAY-2015 13:45
R:\Roadway\Proj\u3308_ls_1C-1.dgn
$$$$USERNAME$$$$

PROJECT REFERENCE NO.	SHEET NO.
U-3308	1C-2
Location and Surveys	

SURVEY CONTROL SHEET U-3308

GPS Calibration Report

Project : 34915.1.1 TIP Number: U3308

User name A.P. Spielvogel Date & Time 10:54:50 AM 6/20/05
Coordinate System US State Plane 1983(at ground) Zone North Carolina 3200
Horizontal Datum NAD 1983 (Conus)
Vertical Datum Geoid Model Geoid99 NC Sub Grid

Coordinate Units US Survey Feet
Distance Units US Survey Feet
Height Units US Survey Feet

LOCAL SITE INFORMATION
Localized around U3308-1
Latitude 35°58'52.77432"N
Longitude 78°53'19.19111"W
Site Scale Factor 1.000057303
Height ?

The North Carolina Department of Transportation uses a Localized Coordinate System which is very similar to North Carolina Zone 3200 from which it is derived.
Please take care in utilizing these coordinates to eliminate confusion of the two systems.
This file is to aid in the use of Real Time Kinematic (RTK) GPS during construction layout.

Datum Transformation Parameters

Datum Transformation computation not requested

Updated Default Projection (Transverse Mercator) Definition

Updated default projection not requested

Horizontal Adjustment Parameters

Northing coordinate of rotation center 806047.0164SFT
Easting coordinate of rotation center 2028149.2155SFT
Rotation about the center point 0°00'00"
Translation north 0.3463SFT
Translation east -0.2689SFT
Scale factor 1.00005747

Vertical Adjustment Parameters

Northing coordinate of origin point 840519.8109SFT
Easting coordinate of origin point 1975512.3961SFT
Vertical separation at origin -0.1436SFT
Slope north 0.629PPM
Slope east 0.302PPM

Geoid Model Definition

Geoid03 (CONUS) NC Sub Grid

Residual Differences Between GPS (WGS84) And Local Coordinates

Summary

	Maximum Error	Root Mean Square Error	Point
Horizontal	0.010sft	0.002	TURNKEY_WGS84
Vertical	0.078sft	0.011	TURNKEY_WGS84
Three-dimensional	0.079sft	0.011	TURNKEY_WGS84

Point NEALS_ WGS84 Latitude 36°03'33.70562"N Longitude 79°04'58.20354"W Height 516.9051sft	Northing 840519.8109sft Easting 1975512.3961 Elevation 617.0749sft Horz error 0.008sft Vert error 0.017sft 3D error 0.019sft	Point NEALS Local Northing 840519.8117 Easting 1975512.4040sft Elevation 617.0919sft Utilized Horz and Vert Quality Survey quality
Point EARL SMITH_ WGS84 Latitude 35°44'57.32992"N Longitude 78°51'09.25788"W Height 382.9815sft	Northing 727654.554sft Easting 2043745.3942sft Elevation 488.3649sft Horz error 0.007sft Vert error 0.004sft 3D error 0.008sft	Point EARL SMITH Local Northing 727654.5486sft Easting 2043745.3974sft Elevation 488.3684sft Utilized Horz and Vert Quality Survey quality
Point TURNKEY_ WGS84 Latitude 35°59'14.51009"N Longitude 78°50'47.43883"W Height 267.6865sft	Northing 814333.7648 Easting 2045409.8586sft Elevation 371.0434sft Horz error 0.010sft Vert error 0.078sft 3D error 0.079sft	Point TURNKEY Local Northing 814333.7683sft Easting 2045409.8495sft Elevation 371.1213sft Utilized Horz and Vert Quality Survey quality
Point U3308-1_ WGS84 Latitude 35°58'52.77432"N Longitude 78°53'19.19115"W Height 283.7035sft	Northing 812119.1554sft Easting 2032940.7021sft Elevation 386.5564sft Horz error 0.004sft Vert error 0.015sft 3D error 0.016sft	Point U3308-1 Local Northing 812119.1566sft Easting 2032940.6979sft Elevation 386.5412sft Utilized Horz and Vert Quality Survey quality
Point U3308-2_ WGS84 Latitude 35°58'57.96845"N Longitude 78°53'31.18917"W Height 293.4541sft	Northing 812643.9091sft Easting 2031954.0107sft Elevation 396.2549sft Horz error 0.003sft Vert error 0.019sft 3D error 0.019sft	Point U3308-2 Local Northing 812643.3091sft Easting 2031954.0135sft Elevation 396.2361sft Utilized Horz and Vert Quality Survey quality
Point U3308-3_ WGS84 Latitude 35°59'42.51098"N Longitude 78°53'09.71889"W Height 231.9418sft	Northing 817149.5425sft Easting 2033713.4559sft Elevation 334.7078sft Horz error 0.002sft Vert error 0.033sft 3D error 0.033sft	Point u3308-3 Local Northing 817149.5402sft Easting 2033713.4555sft Elevation 334.6745sft Utilized Horz and Vert Quality Survey quality
Point U3308-4_ WGS84 Latitude 35°59'49.99641"N Longitude 78°53'09.05905"W Height 246.3414sft	Northing 817906.5538sft Easting 2033766.8087sft Elevation 349.0921sft Horz error 0.003sft Vert error 0.031sft 3D error 0.031sft	Point U3308-4 Local Northing 817906.5564sft Easting 2033766.8084sft Elevation 349.0610sft Utilized Horz and Vert Quality Survey quality

DATUM DESCRIPTION

THE LOCALIZED COORDINATE SYSTEM DEVELOPED FOR THIS PROJECT IS BASED ON THE STATE PLANE COORDINATES ESTABLISHED BY NCDOT FOR MONUMENT "U3308-1"
WITH NAD 1983/95 STATE PLANE GRID COORDINATES OF
NORTHING: 812119.1565(ft) EASTING: 2032940.6980(ft)
THE AVERAGE COMBINED GRID FACTOR USED ON THIS PROJECT (GROUND TO GRID) IS: 0.99994270
THE N.C. LAMBERT GRID BEARING AND LOCALIZED HORIZONTAL GROUND DISTANCE FROM
"U3308-1" TO -LALT- 13+50.00 STATION IS
N 84° 58' 17.0" W 634.7202(ft)
ALL LINEAR DIMENSIONS ARE LOCALIZED HORIZONTAL DISTANCES
VERTICAL DATUM USED IS NAVD 88

NOTE: DRAWING NOT TO SCALE

NOTES:

1. *THE SITE CALIBRATION SHOWN IS BASED UPON A NETWORK TIED TO THE HARN (HIGH ACCURACY REFERENCE NETWORK) NAD 8395 ADJUSTMENT. THIS CALIBRATION WILL ALLOW THE END USER TO WORK WITHIN THE SAME COORDINATE SYSTEM WHEN USING RTK (REAL TIME KINEMATIC) GPS AND A LOCAL BASE STATION. IF ANOTHER SYSTEM SUCH AS VRS (VIRTUAL REFERENCE STATION) IS USED, ADDITIONAL FIELD TIES MAY BE NEEDED TO REDUCE POSSIBLE ERRORS, OR BIASES.*

2. *THE CONTROL DATA FOR THIS PROJECT CAN BE FOUND ELECTRONICALLY BY SELECTING PROJECT CONTROL DATA AT:*
HTTP://WWW.DOH.DOT.STATE.NC.US/PRECONSTRUCT/HIGHWAY/LOCATION/PROJECT/

THE FILES TO BE FOUND ARE AS FOLLOWS:
U3308_LS_GPSCALIB_050829.HTML
U3308_LS_WGS84_050829.TXT
U3308_LS_LOCAL_050829.TXT
U3308_LS_CONTROL_050829.TXT

THE WGS84 AND LOCAL FILES ARE COMMA DELIMITED AND CAN BE USED TO REPRODUCE THE SITE CALIBRATION FOR THE END USER'S GPS EQUIPMENT. IF FURTHER INFORMATION IS NEEDED, PLEASE CONTACT THE LOCATION AND SURVEYS UNIT.

PROJECT REFERENCE NO.	SHEET NO.
U-3308	1C-3
Location and Surveys	

SURVEY CONTROL SHEET U-3308

CONTROL DATA:

BL

POINT	DESC.	NORTH	EAST	ELEVATION	LALT STATION	OFFSET
100	BL-100	811382.3270	2032035.7910	390.03	OUTSIDE PROJECT LIMITS	
101	BL-101	811853.9600	2032217.8670	388.48	OUTSIDE PROJECT LIMITS	
102	BL-102	812083.5940	2032308.7900	397.07	OUTSIDE PROJECT LIMITS	
103	BL-103	812297.1280	2032399.1270	407.94	14+97.19	39.12 RT
180	POINT NOT SET	812375.6081	2032430.5233	UNKNOWN	15+81.71	39.31 RT
104	BL-104	812555.7530	2032502.5910	408.84	17+75.65	39.78 RT
105	BL-105	812838.3410	2032617.0490	401.55	20+79.07	48.09 RT
181	POINT NOT SET	813035.6549	2032683.6804	UNKNOWN	22+87.30	44.17 RT
106	BL-106	813102.7770	2032706.3470	397.04	23+58.13	42.84 RT
107	BL-107	813306.5760	2032795.8480	396.71	25+81.36	57.45 RT
108	BL-108	813504.7440	2032868.4300	395.14	27+92.78	53.11 RT
109	BL-109 PK	813862.6950	2033004.7730	380.63	31+75.80	49.96 RT
110	BL-110	814014.3640	2033073.6490	377.33	33+42.13	58.97 RT
111	BL-111 PK	814326.4050	2033192.1510	373.69	36+80.86	46.01 RT
112	BL-112 PK	814704.8910	2033364.2030	360.35	40+97.26	1.20 LT
113	BL-113	814891.0430	2033457.9560	352.92	43+05.85	0.14 LT
114	BL-114	815049.2290	2033531.5390	350.72	44+80.14	7.26 RT
115	BL-115	815187.8620	2033593.5770	349.35	46+31.96	11.78 RT
116	BL-116	815445.2000	2033695.4640	353.80	49+05.67	20.85 RT
117	BL-117	815922.8060	2033730.8230	349.16	53+81.31	27.75 RT
118	BL-118	816300.0780	2033748.3780	357.23	57+58.97	31.77 RT
119	BL-119 PK	816581.2290	2033749.0890	353.94	60+39.96	22.39 RT
120	BL-120	816948.9180	2033759.9420	337.36	64+07.54	21.29 RT
121	BL-121 PK	817357.1680	2033770.1280	335.55	68+15.31	27.52 RT
4	-U3308-4	817406.5540	2033766.8070	349.86	OUTSIDE PROJECT LIMITS	

BY

POINT	DESC.	NORTH	EAST	ELEVATION	LALT STATION	OFFSET
122	BY-122	811504.8860	2031826.1370	392.56	OUTSIDE PROJECT LIMITS	
A100	BL-100	811382.3270	2032035.7910	390.03	OUTSIDE PROJECT LIMITS	
123	BY-123 PK	811326.9960	2032230.6220	387.58	OUTSIDE PROJECT LIMITS	

BY1

POINT	DESC.	NORTH	EAST	ELEVATION	LALT STATION	OFFSET
124	BY1-124 PK	812236.1100	2031922.6790	364.66	OUTSIDE PROJECT LIMITS	
A102	BL-102	812083.5940	2032308.7900	397.07	OUTSIDE PROJECT LIMITS	

BY2

POINT	DESC.	NORTH	EAST	ELEVATION	LALT STATION	OFFSET
125	BY2-125	812762.7220	2031807.4390	399.01	17+11.36	682.69 LT
126	BY2-126	812556.5390	2032095.7500	393.63	16+26.22	338.62 LT
127	BY2-127	812415.9160	2032348.7370	390.84	15+88.97	51.58 LT
A180	POINT NOT SET	812375.6081	2032430.5233	0.00	15+81.71	39.31 RT
128	BY2-128	812302.4860	2032582.9490	388.06	15+68.19	208.70 RT
129	BY2-129	812083.1460	2033025.2810	385.45	15+29.57	700.03 RT

BY3

POINT	DESC.	NORTH	EAST	ELEVATION	Y3 STATION	OFFSET
130	BY3-130 PK	812923.5880	2032327.8310	407.40	9+96.11	14.25 LT
A105	BL-105	812838.3410	2032617.0490	401.55	OUTSIDE PROJECT LIMITS	

BY4

POINT	DESC.	NORTH	EAST	ELEVATION	Y3A STATION	OFFSET
A130	BY3-130 PK	812923.5880	2032327.8310	407.12	10+13.87	4.81 LT
131	BY5-131	813167.7890	2032421.2800	415.56	12+73.95	31.79 LT

BY5

POINT	DESC.	NORTH	EAST	ELEVATION	Y STATION	OFFSET
A131	BY5-131	813167.7890	2032421.2800	415.54	15+71.51	20.24 RT
A181	POINT NOT SET	813035.6549	2032683.6804	UNKNOWN	18+65.06	11.38 RT
132	BY5-132 PK	812975.0940	2032803.9460	382.45	19+99.57	9.19 RT
133	BY5-133 PK	812838.9660	2033069.5950	413.40	22+98.06	8.17 RT
134	BY5-134 PK	812623.9530	2033434.6930	402.69	OUTSIDE PROJECT LIMITS	
135	BY5-135 PK	812511.3100	2033642.2980	399.47	OUTSIDE PROJECT LIMITS	

BY8

POINT	DESC.	NORTH	EAST	ELEVATION	LALT STATION	OFFSET
138	BY8-138	812316.8750	2033270.2000	407.63	18+29.65	841.68 RT
137	BY8-137 PK	812266.2120	2033380.4430	405.00	18+22.99	962.78 RT
A136	BY9-136 PK	812201.9490	2033502.7260	403.92	18+09.20	1100.04 RT

BY9

POINT	DESC.	NORTH	EAST	ELEVATION	LALT STATION	OFFSET
136	BY9-136 PK	812201.9490	2033502.7260	403.92	18+09.20	1100.04 RT
A135	BY5-135 PK	812511.3100	2033642.2980	399.47	21+17.46	1123.55 RT

BY10

POINT	DESC.	NORTH	EAST	ELEVATION	LALT STATION	OFFSET
144	BY12-144 PK	814552.9810	2032934.1860	382.11	37+54.52	288.38 LT
143	BY10-143	814202.8460	2032771.5030	393.07	34+07.84	291.03 LT
141	BY11-141	813993.6210	2032676.2110	388.62	31+78.29	303.72 LT
140	BY10-140 PK	813718.7090	2032534.6660	395.19	28+70.73	335.61 LT
139	BY10-139	813420.9720	2032392.9400	405.65	25+47.53	359.91 LT

BY11

POINT	DESC.	NORTH	EAST	ELEVATION	Y1 STATION	OFFSET
B141	BY11-141	813993.6210	2032676.2110	388.65	OUTSIDE PROJECT LIMITS	
B109	BL-109	813862.6950	2033004.7730	380.63	OUTSIDE PROJECT LIMITS	
142	BY11-142 PK	813726.9280	2033322.7380	416.06	OUTSIDE PROJECT LIMITS	

BY11

POINT	DESC.	NORTH	EAST	ELEVATION	Y2 STATION	OFFSET
B141	BY11-141	813993.6210	2032676.2110	388.65	OUTSIDE PROJECT LIMITS	
B109	BL-109	813862.6950	2033004.7730	380.63	10+65.79	27.05 LT
142	BY11-142 PK	813726.9280	2033322.7380	416.06	OUTSIDE PROJECT LIMITS	

BY12

POINT	DESC.	NORTH	EAST	ELEVATION	Y4 STATION	OFFSET
A144	BY12-144 PK	814552.9810	2032934.1860	382.26	12+85.62	19.31 RT
A111	BL-111	814326.4050	2033192.1510	373.69	OUTSIDE PROJECT LIMITS	
145	BY12-145	814213.8840	2033325.3120	380.77	OUTSIDE PROJECT LIMITS	

BY12

POINT	DESC.	NORTH	EAST	ELEVATION	Y5 STATION	OFFSET
A144	BY12-144 PK	814552.9810	2032934.1860	382.26	OUTSIDE PROJECT LIMITS	
A111	BL-111	814326.4050	2033192.1510	373.69	10+57.60	28.42 LT
145	BY12-145	814213.8840	2033325.3120	380.77	12+38.43	17.26 LT

BY13

POINT	DESC.	NORTH	EAST	ELEVATION	Y6 STATION	OFFSET
146	BY13-146 PK	814893.4330	2032943.5140	377.56	OUTSIDE PROJECT LIMITS	
A112	BL-112	814704.8910	2033364.2030	360.35	OUTSIDE PROJECT LIMITS	
147	BY13-147 PK	814593.0690	2033595.2730	370.71	OUTSIDE PROJECT LIMITS	

BY13

POINT	DESC.	NORTH	EAST	ELEVATION	Y7 STATION	OFFSET
146	BY13-146 PK	814893.4330	2032943.5140	377.56	OUTSIDE PROJECT LIMITS	
A112	BL-112	814704.8910	2033364.2030	360.35	10+43.94	19.06 LT
147	BY13-147 PK	814593.0690	2033595.2730	370.71	OUTSIDE PROJECT LIMITS	

BY14

POINT	DESC.	NORTH	EAST	ELEVATION	Y8 STATION	OFFSET
148	BY14-148 PK	815023.4320	2033136.3600	373.95	13+08.59	7.62 RT
A113	BL-113	814891.0430	2033457.9560	352.92	9+61.06	20.80 RT
149	BY14-149 PK	814794.5320	2033647.7170	363.68	OUTSIDE PROJECT LIMITS	

BY14

POINT	DESC.	NORTH	EAST	ELEVATION	Y9 STATION	OFFSET
148	BY14-148 PK	815023.4320	2033136.3600	373.95	OUTSIDE PROJECT LIMITS	
A113	BL-113	814891.0430	2033457.9560	352.92	OUTSIDE PROJECT LIMITS	
149	BY14-149 PK	814794.5320	2033647.7170	363.68	12+51.65	11.84 LT

BY15

POINT	DESC.	NORTH	EAST	ELEVATION	Y10 STATION	OFFSET
150	BY15-150 PK	815126.7330	2033352.0100	365.38	11+66.62	11.52 RT
A114	BL-114	815049.2290	2033531.5390	350.72	OUTSIDE PROJECT LIMITS	
151	BY15-151 PK	814978.3900	2033669.6010	353.90	OUTSIDE PROJECT LIMITS	

BY15

POINT	DESC.	NORTH	EAST	ELEVATION	Y11 STATION	OFFSET
150	BY15-150 PK	815126.7330	2033352.0100	365.38	OUTSIDE PROJECT LIMITS	
A114	BL-114	815049.2290	2033531.5390	350.72	10+28.85	17.06 LT
151	BY15-151 PK	814978.3900	2033669.6010	353.90	11+83.91	11.13 LT

BY16

POINT	DESC.	NORTH	EAST	ELEVATION	Y12 STATION	OFFSET
152	BY16-152	815287.6820	2033397.2820	364.99	12+04.07	14.03 LT
A115	BL-115	815187.8620	2033593.5770	349.35	OUTSIDE PROJECT LIMITS	
153	BY16-153 PK	815122.7170	2033756.3840	345.88	OUTSIDE PROJECT LIMITS	

BY16

POINT	DESC.	NORTH	EAST	ELEVATION	Y13 STATION	OFFSET
152	BY16-152	815287.6820	2033397.2820	364.99	OUTSIDE PROJECT LIMITS	
A115	BL-115	815187.8620	2033593.5770	349.35	10+16.02	21.55 RT
153	BY16-153 PK	815122.7170	2033756.3840	345.88	11+91.11	11.80 RT

BY17

POINT	DESC.	NORTH	EAST	ELEVATION	Y14 STATION	OFFSET
154	-U3308BY17-154	815493.9420	2033467.9960	350.77	12+18.01	21.65 LT
A116	BL-116	815445.2000	2033695.4640	353.80	OUTSIDE PROJECT LIMITS	
155	BY17-155	815259.4070	2034069.9140	341.92	OUTSIDE PROJECT LIMITS	

BY17

POINT	DESC.	NORTH	EAST	ELEVATION	Y15 STATION	OFFSET
154	-U3308BY17-154	815493.9420	2033467.9960	350.77	OUTSIDE PROJECT LIMITS	
A116	BL-116	815445.2000	2033695.4640	353.80	10+08.83	29.92 LT
155	BY17-155	815259.4070	2034069.9140	341.92	14+27.41	18.38 LT

BY18

POINT	DESC.	NORTH	EAST	ELEVATION	Y16 STATION	OFFSET
156	BY18-156	815946.4610	2033475.9130	356.85	12+30.91	21.00 LT
A117	BL-117	815922.8060	2033730.8230	349.16	OUTSIDE PROJECT LIMITS	
157	BY18-157	815920.8440	2034043.2220	339.78	OUTSIDE PROJECT LIMITS	

BY18

POINT	DESC.	NORTH	EAST	ELEVATION	Y17 STATION	OFFSET
156	BY18-156	815946.4610	2033475.9130	356.85	OUTSIDE PROJECT LIMITS	
A117	BL-117	815922.8060	2033730.8230	349.16	10+25.72	36.34 RT
157	BY18-157	815920.8440	2034043.2220	339.78	OUTSIDE PROJECT LIMITS	

BY19

POINT	DESC.	NORTH	EAST	ELEVATION	Y18 STATION	OFFSET
158	BY19-158 PK	816268.2350	2033354.0250	370.41	10+20.83	18.71 RT
A118	BL-118	816300.0780	2033748.3780	357.23	14+13.74	39.90 LT
159	BY19-159	816277.1310	2034079.0340	345.95	17+45.69	20.60 LT

BY20

POINT	DESC.	NORTH	EAST	ELEVATION	Y20 STATION	OFFSET
160	BY20-160	816578.9330	2033620.3810	359.95	10+46.35	15.33 LT
A119	BL-119	816581.2290	2033749.0890	353.94	OUTSIDE PROJECT LIMITS	
161	BY20-161	816580.1730	2033841.0890	345.42	OUTSIDE PROJECT LIMITS	

BY20

POINT	DESC.	NORTH	EAST	ELEVATION	Y21 STATION	OFFSET
160	BY20-160	816578.9330	2033620.3810	359.95	OUTSIDE PROJECT LIMITS	
A119	BL-119	816581.2290	2033749.0890	353.94	10+23.61	21.70 LT
161	BY20-161	816580.1730	2033841.0890	345.42	11+15.57	18.96 LT

BY22

POINT	DESC.	NORTH	EAST	ELEVATION	Y22 STATION	OFFSET
162	BY22-162	816939.4680	2033383.9520	343.47	10+59.24	17.36 LT
A120	BL-120	816948.9180	2033759.9420	337.36	14+35.09	31.46 LT
163	BY22-163	816894.7290	2034231.2750	336.39	19+07.05	16.98 RT

BY23

POINT	DESC.	NORTH	EAST	ELEVATION	LALT STATION	OFFSET
164	BY23-164 PK	817362.1810	2033335.8380	360.33	68+20.59	406.77 LT
A121	BL-121	817357.1680	2033770.1280	335.55	68+15.31	27.52 RT

BY24

POINT	DESC.	NORTH	EAST	ELEVATION	NSS STATION	OFFSET
166	BY24-166	813247.4830	2032452.3090	413.22	18+76.01	18.98 RT
167	BY24-167	813154.4340	2032636.5170	411.96	20+82.38	17.01 RT
A106	BL-106	813102.7770	2032706.3470	397.04	21+68.13	30.85 RT
168	BY24-168	813095.1200	2032749.1920	412.23	22+09.71	17.99 RT
169	BY24-169	812929.7100	2033062.6810	412.40	25+64.15	21.05 RT
170	BY24-170	812733.3950	2033447.6290	405.47	29+96.26	18.77 RT

BM501 ELEVATION = 390.24
N 811527 E 2031971
LALT STATION 13+50.00
S 27°32'15.6" W 730.75'
R/R SPIKE IN ASPHALT

BM502 ELEVATION = 408.92
N 812346 E 2032417
LALT STATION 15+48.92 37.66 RIGHT
CUT SQUARE ON SE BENT

BM503 ELEVATION = 414.78
N 813231 E 2032457
Y STATION 15+72.37 52.46' LEFT
R/R SPIKE SET IN 15" PIN OAK

BM504 ELEVATION = 384.59
N 814163 E 2033350
Y5 STATION 12+83.43 17.94' RIGHT
R/R SPIKE SET IN 42" PIN OAK

BM505 ELEVATION = 341.46
N 815930 E 2033884
Y17 STATION 11+56.50
S 43°40'47.02" E DIST 28.88'
CUT SQUARE IN CONCRETE

BM506 ELEVATION = 335.58
N 816881 E 2034114
Y22 STATION 17+90.86 31.72' RIGHT
R/R SPIKE SET IN 44" PIN OAK

BM507 ELEVATION = 349.66
N 817347 E 2033589
LALT STATION 68+04.89 153.81' LEFT
R/R SPIKE SET IN 48" PIN OAK

DATUM DESCRIPTION

THE LOCALIZED COORDINATE SYSTEM DEVELOPED FOR THIS PROJECT IS BASED ON THE STATE PLANE COORDINATES ESTABLISHED BY NCDOT FOR MONUMENT "U3308-1"
WITH NAD 1983/95 STATE PLANE GRID COORDINATES OF
NORTHING: 812119.1565(ft) EASTING: 2032940.6980(ft)
THE AVERAGE COMBINED GRID FACTOR USED ON THIS PROJECT (GROUND TO GRID) IS: 0.99994270
THE N.C. LAMBERT GRID BEARING AND LOCALIZED HORIZONTAL GROUND DISTANCE FROM "U3308-1" TO -LALT- 13+50.00 STATION IS
N 84° 58' 17.0" W 634.7202(ft)
ALL LINEAR DIMENSIONS ARE LOCALIZED HORIZONTAL DISTANCES
VERTICAL DATUM USED IS NAVD 88

NOTE: DRAWING NOT TO SCALE

NOTES:

1. *THE SITE CALIBRATION SHOWN IS BASED UPON A NETWORK TIED TO THE HARN (HIGH ACCURACY REFERENCE NETWORK) NAD 8395 ADJUSTMENT. THIS CALIBRATION WILL ALLOW THE END USER TO WORK WITHIN THE SAME COORDINATE SYSTEM WHEN USING RTK (REAL TIME KINEMATIC) GPS AND A LOCAL BASE STATION. IF ANOTHER SYSTEM SUCH AS VRS (VIRTUAL REFERENCE STATION) IS USED, ADDITIONAL FIELD TIES MAY BE NEEDED TO REDUCE POSSIBLE ERRORS, OR BIASES.*

2. *THE CONTROL DATA FOR THIS PROJECT CAN BE FOUND ELECTRONICALLY BY SELECTING PROJECT CONTROL DATA AT:*
HTTP://WWW.DOH.DOT.STATE.NC.US/PRECONSTRUCT/HIGHWAY/LOCATION/PROJECT/

THE FILES TO BE FOUND ARE AS FOLLOWS:
U3308_LS_GPSCALIB_050829.HTML
U3308_LS_WGS84_050829.TXT
U3308_LS_LOCAL_050829.TXT
U3308_LS_CONTROL.TXT

THE WGS84 AND LOCAL FILES ARE COMMA DELIMITED AND CAN BE USED TO REPRODUCE THE SITE CALIBRATION FOR THE END USER'S GPS EQUIPMENT. IF FURTHER INFORMATION IS NEEDED, PLEASE CONTACT THE LOCATION AND SURVEYS UNIT.

6/2/99
07-MAY-2015 13:45
R:\Roadway\Proj\u3308_ls_1C-3.dgn
$$$$USERNAME$$$$

PROJECT REFERENCE NO.	SHEET NO.
U-3308	1C-4
Location and Surveys	

SURVEY CONTROL SHEET U-3308

L

TYPE	STATION	NORTH	EAST
POT	4+96.70	811381.8100	2031993.3000
PC	17+57.65	812553.6282	2032458.9653
PT	20+28.04	812806.5464	2032554.5551
PC	31+93.59	813903.6238	2032948.1369
PT	39+26.84	814573.2125	2033245.3742
PC	46+82.27	815239.3577	2033601.6331
PT	51+27.82	815667.3549	2033707.9944
PC	53+22.61	815862.1430	2033707.2244
PT	56+41.14	816180.6138	2033712.3061
PC	62+18.35	816757.4485	2033733.0023
PT	67+65.74	817304.7255	2033742.6447
POT	68+84.57	817423.5553	2033742.5700

L1

TYPE	STATION	NORTH	EAST
POT	12+00.00	812035.3955	2032253.0263
PC	17+57.65	812553.6267	2032458.9646
PT	20+28.04	812806.5426	2032554.5536
PC	32+90.15	813994.5203	2032980.7466
PT	37+45.64	814402.1114	2033181.8366
PC	39+03.72	814535.0160	2033267.4362
PT	43+56.56	814935.7907	2033476.9129
PC	47+70.02	815318.0395	2033634.5115
PT	50+36.42	815577.0232	2033690.6498
PC	62+17.60	816757.4464	2033733.0022
PT	67+64.97	817304.7052	2033742.6448
EQB	68+79.26	817418.9877	2033742.5730
EQA	68+77.15	817418.9877	2033742.5730

L2

TYPE	STATION	NORTH	EAST
POT	10+00.00	811381.8100	2031993.3000
PC	17+85.18	812111.4876	2032283.2644
PT	18+55.45	812176.3204	2032310.3563
PC	19+62.18	812274.0613	2032353.2316
PT	20+43.56	812349.2296	2032384.3976
PC	32+12.67	813438.0798	2032810.1044
PT	38+31.54	814020.0144	2033020.4922
PC	38+69.48	814056.0174	2033032.4681
PRC	43+73.78	814515.2960	2033238.6632
PT	46+05.68	814721.2996	2033344.9862
PC	52+74.24	815328.9703	2033623.7360
PT	55+69.19	815614.0745	2033691.5287
PC	68+13.31	816857.3571	2033737.3190
PT	71+12.85	817156.8281	2033742.7377
POT	73+79.58	817423.5600	2033742.5700

L3

TYPE	STATION	NORTH	EAST
POT	13+50.00	812174.7923	2032308.4208
PC	17+57.65	812553.6267	2032458.9646
PT	20+28.04	812806.5426	2032554.5536
PC	32+57.53	813963.8127	2032969.7301
PT	38+83.82	814524.2505	2033246.2289
PC	39+69.87	814596.5999	2033292.8268
PT	44+22.71	814997.3746	2033502.3035
PC	47+69.56	815318.0395	2033634.5115
PT	50+35.96	815577.0232	2033690.6498
PC	62+17.14	816757.4464	2033733.0022
PT	67+64.51	817304.7052	2033742.6448
POT	68+78.80	817418.9877	2033742.5730

LALT

TYPE	STATION	NORTH	EAST
POT	12+00.00	812035.3955	2032253.0263
PC	17+57.65	812553.6267	2032458.9646
PT	20+28.04	812806.5426	2032554.5536
PC	25+00.01	813250.7885	2032713.9291
PT	26+10.85	813354.5858	2032752.7983
PC	34+79.67	814163.9271	2033068.7276
PT	38+79.73	814519.6195	2033250.3830
PC	39+80.08	814603.9831	2033304.7189
PT	43+42.35	814924.6028	2033472.3002
PC	47+67.91	815318.0395	2033634.5115
PT	50+34.31	815577.0232	2033690.6498
PC	62+15.49	816757.4464	2033733.0022
PT	67+62.86	817304.7052	2033742.6448
POT	68+77.15	817418.9877	2033742.5730

LR1_QC

TYPE	STATION	NORTH	EAST
POT	5+00.00	817418.9877	2033742.5730

NSALTA

TYPE	STATION	NORTH	EAST
TS	10+00.00	813566.6166	2031879.8242
SC	11+24.00	813510.4103	2031990.3516
CS	12+46.73	813458.4051	2032101.5128
ST	13+70.73	813409.5788	2032215.4928
TS	15+90.73	813324.2890	2032418.2875
SC	17+14.73	813275.4627	2032532.2675
CS	20+84.20	813105.9146	2032860.2903
ST	22+08.20	813041.1668	2032966.0408
TS	24+28.20	812925.0514	2033152.9023
SC	25+52.20	812860.3036	2033258.6529
CS	26+74.93	812799.6939	2033365.3665
ST	27+98.93	812742.0308	2033475.1410
POT	29+51.18	812672.1223	2033610.3921

NS

TYPE	STATION	NORTH	EAST
POT	34+00.00	813597.6039	2031850.3632
POT	57+50.00	812518.5568	2033937.9833

NSD2

TYPE	STATION	NORTH	EAST
TS	10+00.00	813579.1631	2031851.5113
SC	11+24.00	813523.1428	2031962.1318
CS	12+57.34	813468.0044	2032083.5228
ST	13+81.34	813421.5572	2032198.4917
TS	16+01.34	813340.8067	2032403.1362
SC	17+25.34	813294.3595	2032518.1050
CS	21+16.03	813115.2062	2032864.8597
ST	22+40.03	813048.3123	2032969.2647
TS	24+60.03	812928.1271	2033153.5349
SC	25+84.03	812861.2332	2033257.9399
CS	27+17.37	812794.1302	2033373.1492
ST	28+41.37	812736.3219	2033482.8460

DATUM DESCRIPTION

THE LOCALIZED COORDINATE SYSTEM DEVELOPED FOR THIS PROJECT
IS BASED ON THE STATE PLANE COORDINATES ESTABLISHED BY
NCDOT FOR MONUMENT "U3308-1"
WITH NAD 83/95 STATE PLANE GRID COORDINATES OF
NORTHING: 812119.1565(ft) EASTING: 2032940.6980(ft)
THE AVERAGE COMBINED GRID FACTOR USED ON THIS PROJECT
(GROUND TO GRID) IS: 0.99994270
THE N.C. LAMBERT GRID BEARING AND
LOCALIZED HORIZONTAL GROUND DISTANCE FROM
"U3308-1" TO -LALT- 13+50.00 IS
N 84° 58′ 17.0″ W 634.7202 (ft)
ALL LINEAR DIMENSIONS ARE LOCALIZED HORIZONTAL DISTANCES
VERTICAL DATUM USED IS NAVD 88

NOTE: DRAWING NOT TO SCALE

NOTES:

1. *THE SITE CALIBRATION SHOWN IS BASED UPON A NETWORK TIED TO THE HARN (HIGH ACCURACY REFERENCE NETWORK) NAD 8395 ADJUSTMENT. THIS CALIBRATION WILL ALLOW THE END USER TO WORK WITHIN THE SAME COORDINATE SYSTEM WHEN USING RTK (REAL TIME KINEMATIC) GPS AND A LOCAL BASE STATION. IF ANOTHER SYSTEM SUCH AS VRS (VIRTUAL REFERENCE STATION) IS USED, ADDITIONAL FIELD TIES MAY BE NEEDED TO REDUCE POSSIBLE ERRORS, OR BIASES.*

2. *THE CONTROL DATA FOR THIS PROJECT CAN BE FOUND ELECTRONICALLY BY SELECTING PROJECT CONTROL DATA AT:*

   HTTPS://CONNECT.NCDOT.GOV/RESOURCES/LOCATION/

   THE FILES TO BE FOUND ARE AS FOLLOWS:

   U3308_CONTROL.TXT

   THE WGS84 AND LOCAL FILES ARE COMMA DELIMITED AND CAN BE USED TO REPRODUCE THE SITE CALIBRATION FOR THE END USER'S GPS EQUIPMENT. IF FURTHER INFORMATION IS NEEDED, PLEASE CONTACT THE LOCATION AND SURVEYS UNIT.

◎ *INDICATES GEODETIC CONTROL MONUMENTS USED OR SET FOR HORIZONTAL PROJECT CONTROL BY THE NCDOT LOCATION AND SURVEYS UNIT.*
PROJECT CONTROL ESTABLISHED USING GLOBAL POSITIONING SYSTEM.
NETWORK ESTABLISHED FROM EXISTING HARN MONUMENTATION
SEE GPS CALIBRATION SHEET FOR HORIZONTAL AND VERTICAL COORDINATE VALUES.

6/2/99
30-JUN-2015 07:55
R:\Roadway\Proj\U3308_LS_1c-4.dgn
$$$$USERNAME$$$$

PROJECT REFERENCE NO.	SHEET NO.
U-3308	1C-5
Location and Surveys	

SURVEY CONTROL SHEET U-3308

NSN

TYPE	STATION	NORTH	EAST
POT	10+00.00	813676.1020	2031696.1030
POT	31+41.59	812692.6472	2033598.5310

NSS

TYPE	STATION	NORTH	EAST
POT	10+00.00	813666.3757	2031682.7097
POT	30+46.93	812726.8090	2033501.2585

NSS_NSN

TYPE	STATION	NORTH	EAST
POT	10+00.00	813672.8527	2031686.0560
POT	31+50.00	812685.5367	2033595.9535

R1

TYPE	STATION	NORTH	EAST
POT	10+00.00	812565.6260	2031944.0485
PC	11+27.17	812468.4591	2032026.0854
PT	14+55.67	812278.5151	2032290.0539
POT	15+11.05	812258.0865	2032341.5209

R2

TYPE	STATION	NORTH	EAST
POT	10+00.00	812249.6945	2032338.1860
POT	11+00.49	812224.2262	2032435.3910

R3

TYPE	STATION	NORTH	EAST
POT	10+00.00	812619.8207	2032484.9293
PC	13+59.09	812750.8246	2032150.5892
PT	18+65.96	813009.5675	2031717.4082
POT	18+93.03	813027.0785	2031696.7628

R4

TYPE	STATION	NORTH	EAST
POT	10+00.00	812525.7757	2032481.2551
PC	10+52.68	812574.7324	2032500.7098
PT	12+30.37	812684.4751	2032631.2722
POT	12+62.21	812690.9712	2032662.4520

R5

TYPE	STATION	NORTH	EAST
POT	10+00.00	812827.2123	2032561.9691
POT	11+66.93	812745.6587	2032707.6205

SW2

TYPE	STATION	NORTH	EAST
PC	10+00.00	813565.7548	2031909.5623
PT	11+12.69	813516.9870	2032011.1375
PC	12+12.69	813476.3832	2032102.5231
PT	13+22.78	813428.8110	2032201.7815
POT	14+02.53	813392.2852	2032272.6753
POT	14+33.78	813380.8149	2032301.7441

WALL1

TYPE	STATION	NORTH	EAST
PC	37+32.00	814413.1342	2033137.2785
PT	38+82.90	814542.9031	2033214.2323
PC	39+83.25	814627.2666	2033268.5681
PT	40+32.10	814668.6621	2033294.5044

WALL2

TYPE	STATION	NORTH	EAST
POT	10+00.00	815213.9051	2033638.0890
PC	10+94.74	815301.4923	2033674.2005
PT	11+51.04	815354.2600	2033693.8081
POT	11+95.76	815367.1996	2033736.6091
POT	12+41.76	815347.8280	2033778.3312

WALL3

TYPE	STATION	NORTH	EAST
POT	10+50.00	815421.9754	2033619.8156
POT	11+07.95	815446.3752	2033567.2564

WALL3A

TYPE	STATION	NORTH	EAST
POT	10+00.00	815413.1076	2033622.3178
POT	10+09.21	815421.9754	2033619.8156
POT	10+28.75	815430.2010	2033602.0970
POT	10+35.75	815423.7756	2033599.3196

WALL3AB

TYPE	STATION	NORTH	EAST
POT	10+00.00	815413.1076	2033622.3178
POT	10+09.21	815421.9754	2033619.8156
POT	10+28.75	815430.2010	2033602.0970
POT	10+35.75	815423.7756	2033599.3196
POT	10+39.62	815425.4100	2033595.8069
POT	10+46.62	815431.8746	2033598.4920
POT	10+81.06	815446.3752	2033567.2564

WALL3B

TYPE	STATION	NORTH	EAST
POT	10+39.62	815425.4100	2033595.8069
POT	10+46.62	815431.8746	2033598.4920
POT	10+81.06	815446.3752	2033567.2564

WALL4

TYPE	STATION	NORTH	EAST
PC	49+72.00	815509.4044	2033732.0050
PT	50+38.17	815575.3559	2033737.1199
POT	52+53.86	815790.9115	2033744.8538

WALL5

TYPE	STATION	NORTH	EAST
POT	57+70.00	816310.5772	2033763.4989
POT	59+60.00	816500.4550	2033770.3116

Y

TYPE	STATION	NORTH	EAST
POT	10+00.00	813397.8041	2032026.1246
PC	12+15.57	813298.7824	2032217.6036
PRC	14+16.22	813201.9491	2032393.3207
PT	15+68.06	813127.8173	2032525.8221
PC	18+40.63	812999.5111	2032766.3065
PRC	20+52.70	812905.2943	2032956.2543
PT	24+40.92	812724.3465	2033299.5175
PC	24+73.91	812707.4010	2033327.8240
PT	26+01.70	812643.5269	2033438.4963
POT	26+63.34	812613.5737	2033492.3648

DATUM DESCRIPTION

THE LOCALIZED COORDINATE SYSTEM DEVELOPED FOR THIS PROJECT
IS BASED ON THE STATE PLANE COORDINATES ESTABLISHED BY
NCDOT FOR MONUMENT "U3308-1"
WITH NAD 83/95 STATE PLANE GRID COORDINATES OF
NORTHING: 812119.1565(ft) EASTING: 2032940.6980(ft)
THE AVERAGE COMBINED GRID FACTOR USED ON THIS PROJECT
(GROUND TO GRID) IS: 0.99994270
THE N.C. LAMBERT GRID BEARING AND
LOCALIZED HORIZONTAL GROUND DISTANCE FROM
"U3308-1" TO -LALT- 13+50.00 IS
N 84° 58′ 17.0″ W 634.7202 (ft)
ALL LINEAR DIMENSIONS ARE LOCALIZED HORIZONTAL DISTANCES
VERTICAL DATUM USED IS NAVD 88

NOTE: DRAWING NOT TO SCALE

NOTES:

1. *THE SITE CALIBRATION SHOWN IS BASED UPON A NETWORK TIED TO THE HARN (HIGH ACCURACY REFERENCE NETWORK) NAD 8395 ADJUSTMENT. THIS CALIBRATION WILL ALLOW THE END USER TO WORK WITHIN THE SAME COORDINATE SYSTEM WHEN USING RTK (REAL TIME KINEMATIC) GPS AND A LOCAL BASE STATION. IF ANOTHER SYSTEM SUCH AS VRS (VIRTUAL REFERENCE STATION) IS USED, ADDITIONAL FIELD TIES MAY BE NEEDED TO REDUCE POSSIBLE ERRORS, OR BIASES.*

2. *THE CONTROL DATA FOR THIS PROJECT CAN BE FOUND ELECTRONICALLY BY SELECTING PROJECT CONTROL DATA AT:*

   HTTPS://CONNECT.NCDOT.GOV/RESOURCES/LOCATION/

   THE FILES TO BE FOUND ARE AS FOLLOWS:

   U3308_CONTROL.TXT

   THE WGS84 AND LOCAL FILES ARE COMMA DELIMITED AND CAN BE USED TO REPRODUCE THE SITE CALIBRATION FOR THE END USER'S GPS EQUIPMENT. IF FURTHER INFORMATION IS NEEDED, PLEASE CONTACT THE LOCATION AND SURVEYS UNIT.

◎ *INDICATES GEODETIC CONTROL MONUMENTS USED OR SET FOR HORIZONTAL PROJECT CONTROL BY THE NCDOT LOCATION AND SURVEYS UNIT.*
PROJECT CONTROL ESTABLISHED USING GLOBAL POSITIONING SYSTEM.
NETWORK ESTABLISHED FROM EXISTING HARN MONUMENTATION
SEE GPS CALIBRATION SHEET FOR HORIZONTAL AND VERTICAL COORDINATE VALUES.

6/2/99
30-JUN-2015 07:55
R:\Roadway\Proj\U3308_LS_1c-5.dgn
$$$$USERNAME$$$$

PROJECT REFERENCE NO.	SHEET NO.
U-3308	1C-6
Location and Surveys	

SURVEY CONTROL SHEET U-3308

Y1

TYPE	STATION	NORTH	EAST
POT	10+00.00	813961.0490	2032695.5040
POT	12+73.92	813858.1677	2032949.3733

Y4

TYPE	STATION	NORTH	EAST
POT	9+82.13	814332.5608	2033143.6944
POT	14+92.17	814679.1901	2032769.5501

Y5

TYPE	STATION	NORTH	EAST
POT	10+17.87	814332.5608	2033143.6944
PC	10+97.27	814278.5985	2033201.9402
PT	12+48.88	814193.8649	2033326.9641
POT	12+90.03	814176.1900	2033364.1200

Y6

TYPE	STATION	NORTH	EAST
POT	9+56.56	814687.6615	2033355.7566
POT	13+83.23	814865.3283	2032967.8388

Y7

TYPE	STATION	NORTH	EAST
POT	10+43.44	814687.7682	2033355.8182
POT	12+85.85	814586.8700	2033576.2300

Y8

TYPE	STATION	NORTH	EAST
POT	9+60.63	814871.9492	2033449.7037
POT	14+21.52	815063.4132	2033030.4667

Y9

TYPE	STATION	NORTH	EAST
POT	10+39.37	814871.9492	2033449.7037
POT	14+24.47	814711.9715	2033799.9973

Y10

TYPE	STATION	NORTH	EAST
POT	9+77.66	815036.5099	2033518.4388
POT	14+36.15	815230.0818	2033102.8145

Y11

TYPE	STATION	NORTH	EAST
POT	10+22.34	815036.5100	2033518.4388
POT	14+12.64	814871.7262	2033872.2520

Y12

TYPE	STATION	NORTH	EAST
POT	9+96.74	815212.7896	2033591.1177
POT	14+41.84	815400.8775	2033187.7097

Y13

TYPE	STATION	NORTH	EAST
POT	10+03.26	815212.7896	2033591.1177
POT	11+98.96	815130.0900	2033768.4900

Y14

TYPE	STATION	NORTH	EAST
POT	10+06.10	815424.3515	2033669.3195
POT	12+29.17	815518.2800	2033466.9900

Y15

TYPE	STATION	NORTH	EAST
POT	9+93.90	815424.3517	2033669.3195
PC	13+89.30	815257.8395	2034027.9491
PT	14+34.74	815239.6448	2034069.5880
PC	14+44.28	815236.0280	2034078.4059
PT	14+55.15	815231.7929	2034088.4196
POT	16+93.00	815136.7666	2034306.4691

Y15A

TYPE	STATION	NORTH	EAST
POT	10+00.00	815354.9086	2033818.8846
PC	10+25.78	815378.2882	2033829.7388
PT	10+72.47	815417.9753	2033854.1475
POT	11+78.29	815501.0385	2033919.7040

Y16

TYPE	STATION	NORTH	EAST
POT	10+03.07	815959.1774	2033704.3611
POT	12+50.52	815968.1600	2033457.0700

Y17

TYPE	STATION	NORTH	EAST
POT	9+96.97	815960.8923	2033704.4226
POT	11+56.50	815950.8200	2033863.6300

Y18

TYPE	STATION	NORTH	EAST
POT	10+00.00	816287.7055	2033333.9035
PC	10+95.32	816284.1680	2033429.1578
PRC	11+58.98	816279.5585	2033492.6365
PRC	16+59.42	816256.9120	2033992.2350
PT	17+82.35	816255.2554	2034115.1412
POT	19+66.48	816247.1173	2034299.0913

Y2

TYPE	STATION	NORTH	EAST
POT	10+16.56	813856.9361	2032948.8925
POT	11+00.00	813824.4630	2033025.7505

Y20

TYPE	STATION	NORTH	EAST
POT	10+00.00	816563.9600	2033573.9200
POT	11+52.10	816562.7970	2033726.0183

Y21

TYPE	STATION	NORTH	EAST
POT	10+00.00	816559.0977	2033725.8855
POT	11+31.66	816561.5100	2033857.5200

Y22

TYPE	STATION	NORTH	EAST
POT	10+00.00	816922.8400	2033324.5000
POT	19+46.78	816911.1400	2034271.2100

Y3

TYPE	STATION	NORTH	EAST
POT	9+80.23	812916.1817	2032307.8213
POT	12+49.64	812816.9745	2032558.2962

Y3A

TYPE	STATION	NORTH	EAST
POT	10+00.00	812909.0387	2032325.8555
POT	12+88.05	813166.0060	2032456.0150

DATUM DESCRIPTION

THE LOCALIZED COORDINATE SYSTEM DEVELOPED FOR THIS PROJECT IS BASED ON THE STATE PLANE COORDINATES ESTABLISHED BY NCDOT FOR MONUMENT "U3308-1"
WITH NAD 83/95 STATE PLANE GRID COORDINATES OF
NORTHING: 812119.1565(ft) EASTING: 2032940.6980(ft)
THE AVERAGE COMBINED GRID FACTOR USED ON THIS PROJECT (GROUND TO GRID) IS: 0.99994270
THE N.C. LAMBERT GRID BEARING AND
LOCALIZED HORIZONTAL GROUND DISTANCE FROM
"U3308-1" TO -LALT- 13+50.00 IS
N 84° 58′ 17.0″ W 634.7202 (ft)
ALL LINEAR DIMENSIONS ARE LOCALIZED HORIZONTAL DISTANCES
VERTICAL DATUM USED IS NAVD 88

NOTE: DRAWING NOT TO SCALE

NOTES:

1. *THE SITE CALIBRATION SHOWN IS BASED UPON A NETWORK TIED TO THE HARN (HIGH ACCURACY REFERENCE NETWORK) NAD 8395 ADJUSTMENT. THIS CALIBRATION WILL ALLOW THE END USER TO WORK WITHIN THE SAME COORDINATE SYSTEM WHEN USING RTK (REAL TIME KINEMATIC) GPS AND A LOCAL BASE STATION. IF ANOTHER SYSTEM SUCH AS VRS (VIRTUAL REFERENCE STATION) IS USED, ADDITIONAL FIELD TIES MAY BE NEEDED TO REDUCE POSSIBLE ERRORS, OR BIASES.*

2. *THE CONTROL DATA FOR THIS PROJECT CAN BE FOUND ELECTRONICALLY BY SELECTING PROJECT CONTROL DATA AT:*

   HTTPS://CONNECT.NCDOT.GOV/RESOURCES/LOCATION/

   THE FILES TO BE FOUND ARE AS FOLLOWS:

   U3308_CONTROL.TXT

   THE WGS84 AND LOCAL FILES ARE COMMA DELIMITED AND CAN BE USED TO REPRODUCE THE SITE CALIBRATION FOR THE END USER'S GPS EQUIPMENT. IF FURTHER INFORMATION IS NEEDED, PLEASE CONTACT THE LOCATION AND SURVEYS UNIT.

◎ *INDICATES GEODETIC CONTROL MONUMENTS USED OR SET FOR HORIZONTAL PROJECT CONTROL BY THE NCDOT LOCATION AND SURVEYS UNIT.*
PROJECT CONTROL ESTABLISHED USING GLOBAL POSITIONING SYSTEM.
NETWORK ESTABLISHED FROM EXISTING HARN MONUMENTATION
SEE GPS CALIBRATION SHEET FOR HORIZONTAL AND VERTICAL COORDINATE VALUES.

6/2/99
30-JUN-2015 07:55
R:\Roadway\Proj\U3308_LS_1c-6.dgn
$$$$USERNAME$$$$

SURVEY CONTROL SHEET U-3308

Y4

TYPE	STATION	NORTH	EAST
POT	9+82.13	814332.5608	2033143.6944
POT	14+92.17	814679.1901	2032769.5501

Y5

TYPE	STATION	NORTH	EAST
POT	10+17.87	814332.5608	2033143.6944
PC	10+97.27	814278.5985	2033201.9402
PT	12+48.88	814193.8649	2033326.9641
POT	12+90.03	814176.1900	2033364.1200

Y6

TYPE	STATION	NORTH	EAST
POT	9+56.56	814687.6615	2033355.7566
POT	13+83.23	814865.3283	2032967.8388

Y7

TYPE	STATION	NORTH	EAST
POT	10+43.44	814687.7682	2033355.8182
POT	12+85.85	814586.8700	2033576.2300

Y8

TYPE	STATION	NORTH	EAST
POT	9+60.63	814871.9492	2033449.7037
POT	14+21.52	815063.4132	2033030.4667

Y9

TYPE	STATION	NORTH	EAST
POT	10+39.37	814871.9492	2033449.7037
POT	14+24.47	814711.9715	2033799.9973

YB

TYPE	STATION	NORTH	EAST
POT	25+88.05	812999.5111	2032766.3065
EQB	32+13.06	813298.7824	2032217.6036
EQA	12+15.57	813298.7824	2032217.6036
PT	14+16.22	813201.9491	2032393.3207
EQB	20+34.15	812914.8683	2032940.5100
EQA	21+48.54	812914.8683	2032940.5100

YC

TYPE	STATION	NORTH	EAST
POT	10+00.00	812854.3078	2032802.1302
POT	11+18.64	812971.8128	2032818.4827

YA

TYPE	STATION	NORTH	EAST
POT	10+00.00	812607.6605	2032127.0258
PC	10+02.07	812606.5497	2032128.7733
PT	13+02.66	812459.4697	2032390.7487
POT	15+46.91	812351.7098	2032609.9423

CSX

TYPE	STATION	NORTH	EAST
POT	10+00.00	813511.4993	2032087.7289
POT	28+78.85	812648.7879	2033756.8067

CSXN

TYPE	STATION	NORTH	EAST
POT	10+00.00	813356.9237	2032412.7800
POT	16+92.30	813038.2320	2033027.3645

CSXSW

TYPE	STATION	NORTH	EAST
POT	0+00.00	813080.4544	2032921.6664
POT	0+31.25	813066.1054	2032949.4273
PC	2+50.44	812985.3844	2033153.2142
PT	3+50.38	812943.7911	2033244.0383

EXCSX

TYPE	STATION	NORTH	EAST
POT	10+00.00	813169.1080	2032810.1863
PC	10+79.64	813125.7150	2032876.9699
PT	12+52.28	813038.8884	2033026.0984

JOHNWALL2

TYPE	STATION	NORTH	EAST
POT	48+71.49	815365.1280	2033742.2623
POT	49+11.50	815348.2800	2033778.5423

DR1

TYPE	STATION	NORTH	EAST
POT	10+00.00	815365.5622	2033795.9370
POT	10+90.00	815283.9307	2033758.0386

DATUM DESCRIPTION

THE LOCALIZED COORDINATE SYSTEM DEVELOPED FOR THIS PROJECT IS BASED ON THE STATE PLANE COORDINATES ESTABLISHED BY NCDOT FOR MONUMENT "U3308-1"
WITH NAD 83/95 STATE PLANE GRID COORDINATES OF
NORTHING: 812119.1565(ft) EASTING: 2032940.6980(ft)
THE AVERAGE COMBINED GRID FACTOR USED ON THIS PROJECT (GROUND TO GRID) IS: 0.99994270
THE N.C. LAMBERT GRID BEARING AND LOCALIZED HORIZONTAL GROUND DISTANCE FROM "U3308-1" TO -LALT- 13+50.00 IS
N 84° 58′ 17.0″ W 634.7202 (ft)
ALL LINEAR DIMENSIONS ARE LOCALIZED HORIZONTAL DISTANCES
VERTICAL DATUM USED IS NAVD 88

NOTES:

1. *THE SITE CALIBRATION SHOWN IS BASED UPON A NETWORK TIED TO THE HARN (HIGH ACCURACY REFERENCE NETWORK) NAD 8395 ADJUSTMENT. THIS CALIBRATION WILL ALLOW THE END USER TO WORK WITHIN THE SAME COORDINATE SYSTEM WHEN USING RTK (REAL TIME KINEMATIC) GPS AND A LOCAL BASE STATION. IF ANOTHER SYSTEM SUCH AS VRS (VIRTUAL REFERENCE STATION) IS USED, ADDITIONAL FIELD TIES MAY BE NEEDED TO REDUCE POSSIBLE ERRORS, OR BIASES.*

2. *THE CONTROL DATA FOR THIS PROJECT CAN BE FOUND ELECTRONICALLY BY SELECTING PROJECT CONTROL DATA AT:*

   HTTPS://CONNECT.NCDOT.GOV/RESOURCES/LOCATION/

   THE FILES TO BE FOUND ARE AS FOLLOWS:

   U3308_CONTROL.TXT

   THE WGS84 AND LOCAL FILES ARE COMMA DELIMITED AND CAN BE USED TO REPRODUCE THE SITE CALIBRATION FOR THE END USER'S GPS EQUIPMENT. IF FURTHER INFORMATION IS NEEDED, PLEASE CONTACT THE LOCATION AND SURVEYS UNIT.

◎ *INDICATES GEODETIC CONTROL MONUMENTS USED OR SET FOR HORIZONTAL PROJECT CONTROL BY THE NCDOT LOCATION AND SURVEYS UNIT.*
PROJECT CONTROL ESTABLISHED USING GLOBAL POSITIONING SYSTEM.
NETWORK ESTABLISHED FROM EXISTING HARN MONUMENTATION
SEE GPS CALIBRATION SHEET FOR HORIZONTAL AND VERTICAL COORDINATE VALUES.

NOTE: DRAWING NOT TO SCALE

6/2/99
30-JUN-2015 07:55
R:\Roadway\Proj\U3308_LS_1c-7.dgn
$$$$USERNAME$$$$

PROJECT REFERENCE NO.	SHEET NO.
U-3308	TC-8
Location and Surveys	

SURVEY CONTROL SHEET U-3308

ROW MARKER CONCRETE OR GRANITE-E

ALIGN	STATION	OFFSET	NORTH	EAST
LALT	12+00.00	-40.00	812050.1674	2032215.8538
LALT	12+00.00	40.00	812020.6236	2032290.1988
LALT	13+50.00	76.77	812146.4398	2032379.7678
LALT	19+09.76	-78.51	812723.1107	2032440.2890
LALT	20+94.97	50.00	812852.6569	2032624.2176
LALT	20+97.00	-50.00	812888.3356	2032530.7770
LALT	25+00.01	55.08	813232.1877	2032765.7784
LALT	25+02.74	-50.00	813270.2726	2032667.7988
LALT	26+10.85	-50.00	813372.7674	2032706.2211
LALT	26+10.85	56.60	813334.0027	2032805.5276
LALT	34+79.67	-50.00	814182.1086	2033022.1505
LALT	34+79.67	55.89	814143.6069	2033120.7903
LALT	37+35.00	-45.00	814416.7834	2033136.9899
LALT	38+79.73	-45.00	814543.9860	2033212.5509
LALT	38+79.73	50.00	814492.5457	2033292.4188
LALT	39+80.08	-45.00	814628.3496	2033266.8867
LALT	39+80.08	50.00	814576.9092	2033346.7546
LALT	43+42.35	45.00	814907.4503	2033513.9030
LALT	44+15.00	45.00	814974.6203	2033541.5967
LALT	46+00.00	45.00	815145.6539	2033612.1127
LALT	47+64.80	-45.00	815332.3133	2033591.7219
LALT	47+65.19	-54.50	815336.3030	2033583.0920
LALT	47+67.91	-45.00	815335.1921	2033592.9088
LALT	47+67.91	45.00	815300.8870	2033676.1143
LALT	48+19.00	45.00	815351.6188	2033695.0362
LALT	49+47.00	-50.00	815497.7368	2033633.0324
LALT	50+34.31	50.00	815575.2304	2033740.6176
LALT	50+34.31	-50.00	815578.8160	2033640.6819
LALT	53+93.68	50.00	815934.3771	2033753.5035
LALT	54+39.68	50.00	815980.3475	2033755.1528
LALT	57+75.00	50.00	816315.4485	2033767.1759
LALT	60+73.00	-50.00	816616.8424	2033677.9253
LALT	62+15.49	50.00	816755.6536	2033782.9701
LALT	62+15.49	-50.00	816759.2412	2033683.0345
LALT	63+05.00	50.00	816845.4149	2033785.9225
LALT	63+25.00	-50.00	816868.3289	2033686.5497
LALT	64+30.00	30.00	816971.2209	2033769.1537
LALT	64+47.00	-42.47	816989.7316	2033697.0567
LALT	66+10.00	-42.23	817152.2487	2033699.7314
LALT	66+10.00	30.00	817151.5580	2033771.9605
LALT	66+10.00	20.77	817151.6463	2033762.7294

ROW MARKER CONCRETE OR GRANITE-E

ALIGN	STATION	OFFSET	NORTH	EAST
Y	12+63.62	45.00	813236.7314	2032238.9744
Y	12+85.00	30.00	813239.9355	2032264.7170
Y	14+16.22	30.00	813176.0659	2032378.1529
Y	14+50.00	30.00	813158.9845	2032407.6007
Y	15+45.00	30.00	813112.3530	2032491.2254
Y	15+68.06	30.00	813101.3489	2032511.7004
Y	16+50.00	30.00	813062.7789	2032583.9921
Y	16+61.22	45.70	813043.6436	2032586.4945
Y	17+62.19	45.04	812996.6977	2032675.8930
Y	17+70.00	30.00	813006.2919	2032689.8657
Y	18+40.63	30.00	812973.0427	2032752.1847
Y	20+52.69	30.00	812878.0357	2032943.7257
Y	24+40.92	30.00	812698.6063	2033284.1083
Y	24+50.00	30.00	812693.9436	2033291.8971
Y	24+50.00	18.50	812703.8108	2033297.8040

ROW MARKER CONCRETE OR GRANITE-E

ALIGN	STATION	OFFSET	NORTH	EAST
Y1	11+95.00	25.34	813864.3214	2032866.7089
Y1	11+95.00	-24.66	813910.6625	2032885.4887
Y1	12+23.30	-47.91	813921.5863	2032920.4546
Y1	12+24.53	47.08	813833.0897	2032885.9097

ROW MARKER CONCRETE OR GRANITE-E

ALIGN	STATION	OFFSET	NORTH	EAST
Y2	10+70.17	-44.38	813876.9532	2033015.5446
Y2	10+80.00	-24.75	813855.0440	2033016.9632

ROW MARKER CONCRETE OR GRANITE-E

ALIGN	STATION	OFFSET	NORTH	EAST
Y3	9+98.35	65.00	812849.0793	2032300.7257
Y3	10+25.00	30.00	812871.8052	2032338.3939
Y3	10+65.00	-30.97	812913.7632	2032398.0357
Y3	11+73.90	73.57	812776.4625	2032460.7848
Y3	11+75.00	-31.39	812873.6486	2032500.4613
Y3	11+75.58	30.40	812815.9857	2032478.2419

ROW MARKER CONCRETE OR GRANITE-E

ALIGN	STATION	OFFSET	NORTH	EAST
Y3A	10+62.99	29.72	812951.7984	2032380.8332
Y3A	12+32.00	30.00	813102.4473	2032457.4501
Y3A	12+47.00	-29.33	813142.6356	2032411.3044

ROW MARKER CONCRETE OR GRANITE-E

ALIGN	STATION	OFFSET	NORTH	EAST
Y4	10+20.05	-47.61	814323.4108	2033083.5222
Y4	10+50.00	-30.00	814356.6795	2033073.5188
Y4	10+65.00	28.00	814409.4206	2033101.9331
Y4	11+00.00	-28.00	814392.1276	2033038.1997
Y4	11+00.00	-30.00	814390.6604	2033036.8405

ROW MARKER CONCRETE OR GRANITE-E

ALIGN	STATION	OFFSET	NORTH	EAST
Y5	10+59.04	-38.08	814332.5114	2033199.7747
Y5	10+80.00	-25.25	814308.8565	2033206.4293

ROW MARKER CONCRETE OR GRANITE-E

ALIGN	STATION	OFFSET	NORTH	EAST
Y6	10+05.76	-37.69	814673.8797	2033295.3343
Y6	10+16.13	42.46	814751.0751	2033319.2774
Y6	10+20.00	-22.89	814693.2678	2033288.5471
Y6	10+36.00	22.02	814740.7574	2033292.6991

ROW MARKER CONCRETE OR GRANITE-E

ALIGN	STATION	OFFSET	NORTH	EAST
Y7	10+89.75	38.56	814633.4315	2033381.8742
Y7	10+92.09	-42.43	814706.0975	2033417.7177
Y7	11+10.00	-23.00	814680.9768	2033425.9117
Y7	11+17.00	23.00	814636.2372	2033413.1299

ROW MARKER CONCRETE OR GRANITE-E

ALIGN	STATION	OFFSET	NORTH	EAST
Y8	10+29.86	-36.37	814867.6305	2033371.6227
Y8	10+32.94	35.00	814933.8259	2033398.4683
Y8	10+44.00	-16.94	814891.1781	2033366.8326
Y8	10+53.00	15.00	814923.9663	2033371.9127

ROW MARKER CONCRETE OR GRANITE-E

ALIGN	STATION	OFFSET	NORTH	EAST
Y9	10+83.80	-34.08	814884.4951	2033504.2749
Y9	10+84.37	35.44	814821.0176	2033475.9100
Y9	11+05.00	15.00	814831.0405	2033503.1713
Y9	11+05.00	-15.00	814858.3293	2033515.6339

DATUM DESCRIPTION

THE LOCALIZED COORDINATE SYSTEM DEVELOPED FOR THIS PROJECT IS BASED ON THE STATE PLANE COORDINATES ESTABLISHED BY NCDOT FOR MONUMENT "U3308-1"
WITH NAD 83/95 STATE PLANE GRID COORDINATES OF
NORTHING: 812119.1565(ft) EASTING: 2032940.6980(ft)
THE AVERAGE COMBINED GRID FACTOR USED ON THIS PROJECT (GROUND TO GRID) IS: 0.99994270
THE N.C. LAMBERT GRID BEARING AND LOCALIZED HORIZONTAL GROUND DISTANCE FROM "U3308-1" TO -LALT- 13+50.00 IS
N 84° 58′ 17.0″ W 634.7202 (ft)
ALL LINEAR DIMENSIONS ARE LOCALIZED HORIZONTAL DISTANCES
VERTICAL DATUM USED IS NAVD 88

NOTE: DRAWING NOT TO SCALE

NOTES:

1. *THE SITE CALIBRATION SHOWN IS BASED UPON A NETWORK TIED TO THE HARN (HIGH ACCURACY REFERENCE NETWORK) NAD 8395 ADJUSTMENT. THIS CALIBRATION WILL ALLOW THE END USER TO WORK WITHIN THE SAME COORDINATE SYSTEM WHEN USING RTK (REAL TIME KINEMATIC) GPS AND A LOCAL BASE STATION. IF ANOTHER SYSTEM SUCH AS VRS (VIRTUAL REFERENCE STATION) IS USED, ADDITIONAL FIELD TIES MAY BE NEEDED TO REDUCE POSSIBLE ERRORS, OR BIASES.*

2. *THE CONTROL DATA FOR THIS PROJECT CAN BE FOUND ELECTRONICALLY BY SELECTING PROJECT CONTROL DATA AT:*

   HTTPS://CONNECT.NCDOT.GOV/RESOURCES/LOCATION/

   THE FILES TO BE FOUND ARE AS FOLLOWS:

   U3308_CONTROL.TXT

   THE WGS84 AND LOCAL FILES ARE COMMA DELIMITED AND CAN BE USED TO REPRODUCE THE SITE CALIBRATION FOR THE END USER'S GPS EQUIPMENT. IF FURTHER INFORMATION IS NEEDED, PLEASE CONTACT THE LOCATION AND SURVEYS UNIT.

◎ *INDICATES GEODETIC CONTROL MONUMENTS USED OR SET FOR HORIZONTAL PROJECT CONTROL BY THE NCDOT LOCATION AND SURVEYS UNIT.*
PROJECT CONTROL ESTABLISHED USING GLOBAL POSITIONING SYSTEM.
NETWORK ESTABLISHED FROM EXISTING HARN MONUMENTATION
SEE GPS CALIBRATION SHEET FOR HORIZONTAL AND VERTICAL COORDINATE VALUES.

6/2/99
30-JUN-2015 07:55
R:\Roadway\Proj\U3308_LS_lc-8.dgn
$$$$USERNAME$$$$

PROJECT REFERENCE NO.	SHEET NO.
U-3308	1C-9
Location and Surveys	

SURVEY CONTROL SHEET U-3308

ROW MARKER CONCRETE OR GRANITE-E

ALIGN	STATION	OFFSET	NORTH	EAST
Y10	10+43.68	-36.38	815031.4018	2033443.2282
Y10	10+44.10	35.67	815096.8948	2033473.2710
Y10	10+64.00	-15.00	815059.3647	2033433.8382
Y10	10+64.00	15.00	815086.5597	2033446.5040

ROW MARKER CONCRETE OR GRANITE-E

ALIGN	STATION	OFFSET	NORTH	EAST
Y11	10+65.97	-31.60	815046.7317	2033571.3278
Y11	10+90.00	-15.00	815021.5420	2033586.1059
Y11	10+90.00	15.00	814994.3469	2033573.4401

ROW MARKER CONCRETE OR GRANITE-E

ALIGN	STATION	OFFSET	NORTH	EAST
Y12	10+55.31	-35.75	815205.1402	2033522.9251
Y12	10+55.75	35.30	815269.7234	2033552.5509
Y12	10+76.00	15.00	815259.8777	2033525.6207
Y12	10+76.00	-15.00	815232.6877	2033512.9434

ROW MARKER CONCRETE OR GRANITE-E

ALIGN	STATION	OFFSET	NORTH	EAST
Y13	10+47.63	-15.00	815207.6360	2033637.6675
Y13	11+10.00	50.00	815122.3684	2033666.7287
Y13	11+22.00	15.00	815149.0190	2033692.3947

ROW MARKER CONCRETE OR GRANITE-E

ALIGN	STATION	OFFSET	NORTH	EAST
Y13	10+47.63	-15.00	815207.6360	2033637.6675
Y13	11+10.00	50.00	815122.3684	2033666.7287
Y13	11+22.00	15.00	815149.0190	2033692.3947

ROW MARKER CONCRETE OR GRANITE-E

ALIGN	STATION	OFFSET	NORTH	EAST
Y14	10+45.15	-38.15	815406.1923	2033617.8378
Y14	10+55.00	-25.00	815422.2664	2033614.4390
Y14	10+83.00	29.91	815483.8567	2033612.1613
Y14	11+08.00	-25.00	815444.5833	2033566.3666
Y14	11+08.00	-23.00	815446.3948	2033567.2076

ROW MARKER CONCRETE OR GRANITE-E

ALIGN	STATION	OFFSET	NORTH	EAST
Y15	10+36.18	-40.99	815443.7219	2033724.9293
Y15	10+80.00	25.00	815365.4156	2033736.8839
Y15	12+15.00	-46.00	815372.9679	2033889.2306
Y15	12+80.00	-46.01	815345.5960	2033948.1864
Y15	12+80.00	-28.01	815329.2701	2033940.6060
Y15	13+89.49	-28.01	815283.1632	2034039.9147
Y15	14+34.91	-28.00	815265.4860	2034080.3705
Y15	14+63.00	-28.00	815254.3245	2034106.8037
Y15	14+63.00	-43.00	815268.0754	2034112.7964
Y15	15+36.00	-43.00	815238.9111	2034179.7175
Y15	15+36.00	-28.00	815225.1601	2034173.7249
Y15	16+20.00	-28.00	815191.6012	2034250.7300
Y15	16+20.00	-19.62	815183.9196	2034247.3824

ROW MARKER CONCRETE OR GRANITE-E

ALIGN	STATION	OFFSET	NORTH	EAST
Y15A	10+37.68	-39.22	815407.5310	2033800.5373
Y15A	10+62.00	-20.00	815421.1384	2033831.5498
Y15A	10+62.00	20.00	815398.0350	2033864.2029

ROW MARKER CONCRETE OR GRANITE-E

ALIGN	STATION	OFFSET	NORTH	EAST
Y16	10+53.06	-32.73	815928.2855	2033653.2206
Y16	10+53.09	38.27	815999.2398	2033655.7663
Y16	10+63.00	-23.00	815938.3681	2033643.6357
Y16	10+68.00	23.00	815984.5192	2033640.3088

ROW MARKER CONCRETE OR GRANITE-E

ALIGN	STATION	OFFSET	NORTH	EAST
Y18	10+09.86	38.00	816249.3658	2033342.3460
Y18	10+22.22	-30.00	816316.8603	2033357.2193
Y18	10+35.00	-25.00	816311.3899	2033369.8078
Y18	10+35.00	25.00	816261.4238	2033367.9516
Y18	10+95.32	25.00	816259.1848	2033428.2307
Y18	10+95.32	-25.00	816309.1512	2033430.0863
Y18	11+58.98	-25.00	816304.4132	2033495.3277
Y18	11+59.00	25.00	816254.7015	2033489.9663
Y18	12+00.00	-25.00	816300.2331	2033535.8771
Y18	13+11.00	-30.03	816296.0223	2033646.1442
Y18	13+15.00	25.00	816240.8520	2033646.3192
Y18	13+30.94	-46.41	816311.0392	2033666.9534
Y18	13+33.58	45.55	816219.0984	2033663.6547
Y18	14+32.48	48.96	816210.5160	2033763.4111
Y18	14+55.00	30.00	816228.6248	2033786.8321
Y18	14+57.00	-36.90	816295.4184	2033791.0765
Y18	16+57.44	-30.00	816286.8741	2033989.7535
Y18	16+59.42	30.00	816226.9164	2033992.7528
Y18	16+59.42	-30.00	816286.9075	2033991.7174
Y18	16+70.00	30.00	816227.0687	2034003.1759
Y18	16+90.00	50.00	816207.2060	2034022.9146
Y18	17+20.11	-27.11	816284.1420	2034053.2820
Y18	17+20.19	-30.00	816287.0348	2034053.3954
Y18	17+30.00	48.00	816208.8923	2034061.9488
Y18	17+50.00	30.00	816226.4356	2034081.9681
Y18	17+83.00	30.00	816225.2561	2034114.4610
Y18	17+83.00	24.46	816230.7929	2034114.7060

ROW MARKER CONCRETE OR GRANITE-E

ALIGN	STATION	OFFSET	NORTH	EAST
Y20	10+30.00	-23.00	816586.7299	2033604.0950
Y20	10+30.00	-54.00	816617.7290	2033604.3320
Y20	11+01.43	23.02	816540.1647	2033675.1742

ROW MARKER CONCRETE OR GRANITE-E

ALIGN	STATION	OFFSET	NORTH	EAST
Y21	10+48.19	34.67	816525.3134	2033774.7057
Y21	10+52.26	-40.22	816600.2652	2033777.3949
Y21	10+60.00	23.00	816537.2012	2033786.2968
Y21	10+70.00	-22.31	816582.6910	2033795.4649

ROW MARKER CONCRETE OR GRANITE-E

ALIGN	STATION	OFFSET	NORTH	EAST
Y22	12+76.50	25.00	816894.4250	2033600.6699
Y22	12+76.53	23.00	816896.4245	2033600.7238
Y22	13+38.00	-23.00	816941.6614	2033662.7584
Y22	13+49.67	30.00	816888.5212	2033673.7760
Y22	14+70.00	-30.00	816947.0296	2033794.8348
Y22	14+85.00	40.00	816876.8496	2033808.9687
Y22	15+10.00	30.00	816886.5399	2033834.0903
Y22	16+46.92	30.00	816884.8478	2033971.0037
Y22	16+47.27	23.05	816891.7970	2033971.4386
Y22	16+90.00	-30.00	816944.3109	2034014.8182
Y22	16+90.00	-23.00	816937.3114	2034014.7316

DATUM DESCRIPTION

THE LOCALIZED COORDINATE SYSTEM DEVELOPED FOR THIS PROJECT IS BASED ON THE STATE PLANE COORDINATES ESTABLISHED BY NCDOT FOR MONUMENT "U3308-1"
WITH NAD 83/95 STATE PLANE GRID COORDINATES OF
NORTHING: 812119.1565(ft) EASTING: 2032940.6980(ft)
THE AVERAGE COMBINED GRID FACTOR USED ON THIS PROJECT (GROUND TO GRID) IS: 0.99994270
THE N.C. LAMBERT GRID BEARING AND
LOCALIZED HORIZONTAL GROUND DISTANCE FROM
"U3308-1" TO -LALT- 13+50.00 IS
N 84° 58′ 17.0″ W 634.7202 (ft)
ALL LINEAR DIMENSIONS ARE LOCALIZED HORIZONTAL DISTANCES
VERTICAL DATUM USED IS NAVD 88

NOTE: DRAWING NOT TO SCALE

NOTES:

1. *THE SITE CALIBRATION SHOWN IS BASED UPON A NETWORK TIED TO THE HARN (HIGH ACCURACY REFERENCE NETWORK) NAD 8395 ADJUSTMENT. THIS CALIBRATION WILL ALLOW THE END USER TO WORK WITHIN THE SAME COORDINATE SYSTEM WHEN USING RTK (REAL TIME KINEMATIC) GPS AND A LOCAL BASE STATION. IF ANOTHER SYSTEM SUCH AS VRS (VIRTUAL REFERENCE STATION) IS USED, ADDITIONAL FIELD TIES MAY BE NEEDED TO REDUCE POSSIBLE ERRORS, OR BIASES.*

2. *THE CONTROL DATA FOR THIS PROJECT CAN BE FOUND ELECTRONICALLY BY SELECTING PROJECT CONTROL DATA AT:*

   HTTPS://CONNECT.NCDOT.GOV/RESOURCES/LOCATION/

   THE FILES TO BE FOUND ARE AS FOLLOWS:

   U3308_CONTROL.TXT

   THE WGS84 AND LOCAL FILES ARE COMMA DELIMITED AND CAN BE USED TO REPRODUCE THE SITE CALIBRATION FOR THE END USER'S GPS EQUIPMENT. IF FURTHER INFORMATION IS NEEDED, PLEASE CONTACT THE LOCATION AND SURVEYS UNIT.

© *INDICATES GEODETIC CONTROL MONUMENTS USED OR SET FOR HORIZONTAL PROJECT CONTROL BY THE NCDOT LOCATION AND SURVEYS UNIT.*
PROJECT CONTROL ESTABLISHED USING GLOBAL POSITIONING SYSTEM.
NETWORK ESTABLISHED FROM EXISTING HARN MONUMENTATION
SEE GPS CALIBRATION SHEET FOR HORIZONTAL AND VERTICAL COORDINATE VALUES.

30-JUN-2015 07:55
R:\Roadway\Proj\U3308_LS_1c-9.dgn
$$$$USERNAME$$$$

PROJECT REFERENCE NO.	SHEET NO.
U-3308	1C-10
Location and Surveys	

SURVEY CONTROL SHEET U-3308

ROW MARKER PERMANENT EASEMENT-E

ALIGN	STATION	OFFSET	NORTH	EAST
LALT	24+88.10	60.00	813219.3148	2032766.3825
LALT	25+10.00	55.39	813241.3520	2032769.4079
LALT	25+10.00	60.00	813239.7857	2032773.7396
LALT	30+93.00	-50.00	813821.9111	2032881.5465
LALT	32+39.00	-50.00	813957.9164	2032934.6366
LALT	32+39.00	-60.00	813961.5527	2032925.3212
LALT	32+49.00	-50.00	813967.2318	2032938.2729
LALT	32+49.00	-60.00	813970.8681	2032928.9575
LALT	33+60.00	-65.00	814076.0875	2032964.6629
LALT	33+60.00	-50.00	814070.6331	2032978.6360
LALT	33+70.00	-50.00	814079.9485	2032982.2723
LALT	33+70.00	-65.00	814085.4030	2032968.2992
LALT	34+55.00	-80.00	814170.0386	2032985.2347
LALT	34+55.00	-50.00	814159.1296	2033013.1810
LALT	35+05.00	-80.00	814217.4983	2033003.9399
LALT	35+05.00	-50.01	814206.2419	2033031.7320
LALT	36+15.00	-50.01	814309.5258	2033076.9144
LALT	36+15.00	-56.00	814312.0784	2033071.4951
LALT	36+25.00	-50.00	814318.7878	2033081.3080
LALT	38+00.00	55.00	814423.8330	2033255.9490
LALT	38+79.73	55.00	814489.8381	2033296.6228
LALT	40+15.00	-44.99	814657.2074	2033285.1250
LALT	40+25.02	-45.00	814665.5461	2033290.2600
LALT	41+88.00	45.01	814764.0067	2033448.1904
LALT	41+88.00	60.00	814757.2418	2033461.5665
LALT	48+40.00	-45.00	815398.9872	2033615.6912
LALT	49+56.00	-55.00	815506.7459	2033629.3062
LALT	50+34.00	-60.00	815578.8934	2033630.6786
LALT	51+34.00	-60.00	815678.8046	2033634.2634
LALT	51+80.00	-50.00	815724.4165	2033645.9063
LALT	52+03.00	-50.00	815747.4017	2033646.7310
LALT	52+33.00	-76.00	815778.3147	2033621.8234
LALT	52+33.00	-50.00	815777.3824	2033647.8067
LALT	52+63.00	-70.00	815808.0803	2033628.8952
LALT	52+63.00	-76.00	815808.2954	2033622.8991
LALT	52+84.00	-60.00	815828.7082	2033639.6418
LALT	53+21.00	-60.00	815865.6844	2033640.9685
LALT	53+21.00	-52.00	815865.3975	2033648.9633
LALT	53+21.00	-50.00	815865.3258	2033650.9620
LALT	55+50.00	-55.00	816094.3579	2033654.1763
LALT	55+65.00	56.00	816105.3682	2033765.6427
LALT	55+65.00	50.00	816105.5833	2033759.6466
LALT	55+73.00	-61.00	816117.5582	2033649.0048
LALT	55+75.00	56.00	816115.3618	2033766.0013
LALT	55+75.00	50.00	816115.5769	2033760.0051
LALT	55+96.00	-54.00	816140.2924	2033656.8250
LALT	55+96.00	-60.00	816140.5076	2033650.8289
LALT	55+96.00	-50.00	816140.1490	2033660.8224
LALT	56+05.00	-54.00	816149.2866	2033657.1477
LALT	56+05.00	-60.00	816149.5018	2033651.1516
LALT	56+05.00	-50.00	816149.1432	2033661.1451
LALT	56+60.00	-56.00	816204.3230	2033657.1211
LALT	58+88.00	-56.00	816432.1764	2033665.2962
LALT	61+50.00	-67.00	816694.4023	2033663.6976
LALT	61+76.00	-77.00	816720.7442	2033654.6362
LALT	62+00.00	-54.00	816743.9040	2033678.4820
LALT	62+43.00	-57.00	816786.8804	2033676.9969
LALT	62+67.00	-64.00	816811.0029	2033670.7949
LALT	63+00.00	-67.00	816843.9367	2033668.8255
LALT	64+35.93	-50.00	816978.8582	2033689.2990
LALT	64+88.00	-48.00	817030.7058	2033692.3070
LALT	64+88.00	-51.00	817030.7589	2033689.3075
LALT	65+29.00	99.00	817069.3696	2033839.9579
LALT	65+29.00	30.00	817070.4021	2033770.9643
LALT	65+60.00	99.00	817100.5712	2033840.3926
LALT	65+60.00	30.00	817101.4610	2033771.3972
LALT	65+70.00	-58.00	817112.5564	2033683.5307
LALT	66+10.00	-58.00	817152.3994	2033683.9649
ALIGN	STATION	OFFSET	NORTH	EAST
Y	12+04.00	18.91	813287.3032	2032198.6441
Y	12+04.00	29.13	813278.2185	2032193.9460
Y	12+25.86	29.84	813267.5749	2032212.9610
Y	12+80.00	33.53	813239.1838	2032258.6772
Y	13+50.00	33.00	813206.1737	2032319.7105
Y	13+50.00	55.00	813187.0018	2032308.9199
Y	13+72.00	35.00	813193.6846	2032337.6938
Y	13+72.00	55.00	813176.3127	2032327.7834
Y	15+84.00	45.00	813080.6126	2032518.7008
Y	18+62.00	45.00	812949.6813	2032764.2425
Y	18+62.00	40.00	812954.1067	2032766.5698
Y	20+52.69	40.00	812868.9493	2032939.5498
Y	21+13.15	40.00	812843.5278	2032993.6495
Y	22+90.00	30.00	812772.7424	2033154.1189
Y	22+90.00	35.00	812768.3478	2033151.7341
Y	24+58.00	35.00	812685.5443	2033296.1933

ROW MARKER PERMANENT EASEMENT-E

ALIGN	STATION	OFFSET	NORTH	EAST
Y1	11+12.00	-45.00	813960.6889	2032816.2060
Y1	11+12.00	-25.00	813942.1530	2032808.6942
Y1	11+80.00	-45.00	813935.1493	2032879.2276
Y1	11+80.00	-24.77	813916.4031	2032871.6306
Y1	11+85.00	25.26	813868.1512	2032857.4714
Y1	11+93.68	59.48	813833.1836	2032852.6686
ALIGN	STATION	OFFSET	NORTH	EAST
Y3	10+13.58	45.00	812862.0655	2032322.2503
Y3	10+73.00	-41.00	812920.1402	2032409.1662
Y3	10+73.00	-31.00	812910.8458	2032405.4849
Y3	10+83.00	-41.00	812916.4578	2032418.4635
Y3	10+83.00	-31.04	812907.1990	2032414.7963
Y3	11+75.08	43.30	812804.1785	2032473.0267
ALIGN	STATION	OFFSET	NORTH	EAST
Y4	10+24.26	-54.29	814321.3690	2033075.8954
Y4	10+27.25	-43.38	814331.4036	2033081.1192
Y4	10+55.29	41.70	814412.8724	2033118.3694
Y4	10+94.00	-30.00	814386.5826	2033041.2423
Y4	11+00.00	43.00	814444.2106	2033086.4530
Y4	11+00.00	28.00	814433.2070	2033076.2587
Y4	11+32.00	-53.00	814395.5361	2032997.7355
Y4	11+32.00	-28.00	814413.8752	2033014.7260
ALIGN	STATION	OFFSET	NORTH	EAST
Y5	10+63.34	-41.29	814331.9414	2033205.1107
Y5	10+82.00	-30.00	814310.9837	2033211.1270
Y5	11+55.00	-28.00	814264.4891	2033262.9935
Y5	11+55.00	-25.00	814262.0657	2033261.2250
ALIGN	STATION	OFFSET	NORTH	EAST
Y6	10+18.82	-45.96	814671.8015	2033280.0166
Y6	10+20.01	-55.60	814663.5306	2033274.9202
Y6	10+13.18	-29.97	814683.9908	2033291.7951
Y6	11+55.00	-30.00	814743.0174	2033162.8473
Y6	11+54.90	-22.91	814749.4157	2033165.8919
ALIGN	STATION	OFFSET	NORTH	EAST
Y7	10+94.38	42.18	814628.2187	2033384.5777
Y7	11+17.00	30.00	814629.8723	2033410.2167
Y7	11+70.00	30.00	814607.8120	2033458.4073
Y7	11+70.00	40.00	814598.7194	2033454.2450
Y7	11+70.00	23.00	814614.1768	2033461.3210
Y7	11+85.00	40.00	814592.4759	2033467.8839
Y7	11+85.00	30.00	814601.5685	2033472.0462
Y7	11+85.00	23.00	814607.9333	2033474.9598
Y7	12+49.99	23.00	814580.8820	2033534.0530
Y7	12+50.00	30.00	814574.5134	2033531.1480
ALIGN	STATION	OFFSET	NORTH	EAST
Y9	10+99.95	20.00	814828.5888	2033496.5037

ROW MARKER PERMANENT EASEMENT-E

ALIGN	STATION	OFFSET	NORTH	EAST
Y14	10+53.96	-46.98	815401.8921	2033606.1225
Y14	10+89.00	39.00	815494.6324	2033610.5492
Y14	11+02.00	38.00	815499.1993	2033598.3368
Y14	11+02.00	23.00	815485.5917	2033592.0189
ALIGN	STATION	OFFSET	NORTH	EAST
Y15	12+04.00	30.00	815308.6672	2033847.2495
Y15	12+04.00	25.00	815313.1999	2033849.3539
Y15	12+17.00	30.00	815303.1928	2033859.0407
Y15	12+17.00	25.00	815307.7256	2033861.1452
Y15	12+80.00	-43.01	815342.8751	2033946.9230
Y15	12+92.00	29.99	815271.6099	2033927.0665
Y15	12+92.00	25.00	815276.1435	2033929.1714
Y15	13+02.00	29.99	815267.3988	2033936.1367
Y15	13+02.00	25.00	815271.9326	2033938.2416
Y15	13+46.00	29.99	815248.8702	2033976.0452
Y15	13+46.00	24.99	815253.4044	2033978.1503
Y15	13+55.00	29.99	815245.0802	2033984.2083
Y15	13+55.00	24.99	815249.6146	2033986.3135
Y15	15+36.00	-41.00	815237.0775	2034178.9189
Y15	16+20.00	-38.00	815200.7683	2034254.7255
ALIGN	STATION	OFFSET	NORTH	EAST
Y18	10+27.26	29.00	816257.7135	2033360.0734
Y18	10+40.00	-39.00	816325.1940	2033375.3237
Y18	10+63.00	27.00	816258.3859	2033395.8585
Y18	11+15.00	27.00	816256.2694	2033447.2234
Y18	11+46.00	28.00	816252.9845	2033477.1113
Y18	11+58.98	-39.00	816318.3317	2033496.8351
Y18	11+74.00	36.00	816242.1644	2033503.8328
Y18	12+00.00	35.00	816240.5184	2033530.0309
Y18	12+25.00	32.00	816241.1270	2033555.4108
Y18	13+22.23	-43.91	816309.1135	2033658.1986
Y18	13+25.81	-47.25	816312.2102	2033661.9430
Y18	14+37.41	44.78	816214.4946	2033768.5574
Y18	16+84.94	45.00	816212.1899	2034017.9621
ALIGN	STATION	OFFSET	NORTH	EAST
Y22	12+76.28	32.00	816887.4302	2033600.3588
Y22	12+85.00	25.58	816893.7416	2033609.1625
Y22	12+85.00	32.00	816887.3204	2033609.0832
Y22	12+85.00	29.00	816890.3201	2033609.1203
Y22	13+51.90	33.00	816885.4937	2033675.9670
Y22	13+57.82	42.34	816876.0853	2033681.7678
Y22	16+90.00	30.00	816884.3154	2034014.0771
Y22	17+25.00	30.00	816883.8828	2034049.0743
Y22	17+75.00	36.00	816877.2654	2034098.9963
Y22	17+80.00	-23.00	816936.1991	2034104.7251
Y22	18+00.00	-36.00	816948.9510	2034124.8842
Y22	18+03.00	23.01	816889.9042	2034127.1547
Y22	18+40.00	-23.00	816935.4576	2034164.7205
Y22	18+40.00	-44.00	816956.4561	2034164.9800
Y22	18+40.00	-28.00	816940.4573	2034164.7823
Y22	18+64.00	-23.00	816935.1610	2034188.7186
Y22	18+64.00	-44.00	816956.1595	2034188.9782

DATUM DESCRIPTION

THE LOCALIZED COORDINATE SYSTEM DEVELOPED FOR THIS PROJECT IS BASED ON THE STATE PLANE COORDINATES ESTABLISHED BY NCDOT FOR MONUMENT "U3308-1"
WITH NAD 83/95 STATE PLANE GRID COORDINATES OF
NORTHING: 812119.1565(ft) EASTING: 2032940.6980(ft)
THE AVERAGE COMBINED GRID FACTOR USED ON THIS PROJECT (GROUND TO GRID) IS: 0.99994270
THE N.C. LAMBERT GRID BEARING AND
LOCALIZED HORIZONTAL GROUND DISTANCE FROM
"U3308-1" TO -LALT- 13+50.00 IS
N 84° 58′ 17.0″ W 634.7202 (ft)
ALL LINEAR DIMENSIONS ARE LOCALIZED HORIZONTAL DISTANCES
VERTICAL DATUM USED IS NAVD 88

NOTE: DRAWING NOT TO SCALE

NOTES:

1. *THE SITE CALIBRATION SHOWN IS BASED UPON A NETWORK TIED TO THE HARN (HIGH ACCURACY REFERENCE NETWORK) NAD 8395 ADJUSTMENT. THIS CALIBRATION WILL ALLOW THE END USER TO WORK WITHIN THE SAME COORDINATE SYSTEM WHEN USING RTK (REAL TIME KINEMATIC) GPS AND A LOCAL BASE STATION. IF ANOTHER SYSTEM SUCH AS VRS (VIRTUAL REFERENCE STATION) IS USED, ADDITIONAL FIELD TIES MAY BE NEEDED TO REDUCE POSSIBLE ERRORS, OR BIASES.*

2. *THE CONTROL DATA FOR THIS PROJECT CAN BE FOUND ELECTRONICALLY BY SELECTING PROJECT CONTROL DATA AT:*

   HTTPS://CONNECT.NCDOT.GOV/RESOURCES/LOCATION/

   THE FILES TO BE FOUND ARE AS FOLLOWS:

   U3308_CONTROL.TXT

   THE WGS84 AND LOCAL FILES ARE COMMA DELIMITED AND CAN BE USED TO REPRODUCE THE SITE CALIBRATION FOR THE END USER'S GPS EQUIPMENT. IF FURTHER INFORMATION IS NEEDED, PLEASE CONTACT THE LOCATION AND SURVEYS UNIT.

◎ *INDICATES GEODETIC CONTROL MONUMENTS USED OR SET FOR HORIZONTAL PROJECT CONTROL BY THE NCDOT LOCATION AND SURVEYS UNIT.*
PROJECT CONTROL ESTABLISHED USING GLOBAL POSITIONING SYSTEM.
NETWORK ESTABLISHED FROM EXISTING HARN MONUMENTATION
SEE GPS CALIBRATION SHEET FOR HORIZONTAL AND VERTICAL COORDINATE VALUES.

6/2/99
03-NOV-2015 09:40
R:\Roadway\Proj\U3308_LS_1c_10.dgn
$$$$USERNAME$$$$

PROJECT REFERENCE NO.	SHEET NO.
U-3308	2A-1
R/W SHEET NO.	
ROADWAY DESIGN ENGINEER	PAVEMENT DESIGN ENGINEER
SEAL 014571 James A. Speer	SEAL 031484 VLADIMIR G. MITCHEV
DocuSigned by: James Speer 11/23/2015	DocuSigned by: Vladimir G Mitchev 11/19/2015

PAVEMENT SCHEDULE

C1	PROP. APPROX. 1.5″ ASPHALT CONCRETE SURFACE COURSE, TYPE S9.5B, AT AN AVERAGE RATE OF 168 LBS. PER SQ. YD.
C2	PROP. APPROX. 3″ ASPHALT CONCRETE SURFACE COURSE, TYPE S9.5B, AT AN AVERAGE RATE OF 168 LBS. PER SQ. YD. IN EACH OF TWO LAYERS
C3	PROP. VARIABLE DEPTH ASPHALT CONCRETE SURFACE COURSE, TYPE S9.5B, AT AN AVERAGE RATE 112 LBS. PER SQ. YD PER 1″ DEPTH, TO BE PLACED IN LAYERS NOT TO EXCEED 2″ IN DEPTH
D1	PROP. APPROX. 4″ ASPHALT CONCRETE INTERMEDIATE COURSE, TYPE I19.0B, AT AN AVERAGE RATE OF 456 LBS. PER SQ. YD.
D2	PROP. VARIABLE DEPTH ASPHALT CONCRETE INTERMEDIATE COURSE, TYPE I19.0B, AT AN AVERAGE RATE OF 114 LBS. PER SQ. YD. PER 1″ DEPTH, TO BE PLACED IN LAYERS NOT LESS THAN 2.5″ IN DEPTH OR GREATER THAN 4″ IN DEPTH
E1	PROP. APPROX. 3″ ASPHALT CONCRETE BASE COURSE, TYPE B25.0B, AT AN AVERAGE RATE OF 342 LBS. PER SQ. YD.
E2	PROP. APPROX. 4″ ASPHALT CONCRETE BASE COURSE, TYPE B25.0B, AT AN AVERAGE RATE OF 456 LBS. PER SQ. YD.
E3	PROP. APPROX. 5″ ASPHALT CONCRETE BASE COURSE, TYPE B25.0B, AT AN AVERAGE RATE OF 570 LBS. PER SQ. YD.
E4	PROP. VAR. DEPTH ASPHALT CONCRETE BASE COURSE, TYPE B25.0B, AT AN AVERAGE RATE OF 114 LBS. PER SQ. YD. PER 1″ IN DEPTH, TO BE PLACED IN LAYERS NOT LESS THAN 3″ IN DEPTH OR GREATER THAN 5.5″ IN DEPTH
J	8″ AGGREGATE BASE COURSE
K	SUBGRADE TO BE TREATED WITH LIME TO A DEPTH OF 8″ AT A RATE OF 20 lbs/yd2 AS DIRECTED BY THE ENGINEER. —OR— SUBGRADE TO BE TREATED WITH CEMENT TO A DEPTH OF 7″ AT A RATE OF 55 lbs/yd2 AS DIRECTED BY THE ENGINEER.
L	CLASS IV SUBGRADE STABILIZATION
N1	GEOTEXTILE FOR SOIL STABILIZATION
N2	GEOTEXTILE FOR PAVEMENT STABILIZATION
R1	PROPOSED 1′6″ CONCRETE CURB AND GUTTER
R2	EXISTING 2′6″ CONCRETE CURB AND GUTTER
R3	PROPOSED 2′6″ CONCRETE CURB AND GUTTER
R4	PROPOSED CONCRETE ISLAND
S	PROPOSED CONCRETE SIDEWALK
T	EARTH MATERIAL
U	EXISTING PAVEMENT
V1	MILLING EXISTING ASPHALT PAVEMENT, 1.5″ DEPTH
V2	MILLING EXISTING ASPHALT PAVEMENT, 3″ DEPTH
V3	MILLING EXISTING ASPHALT PAVEMENT, VARIABLE DEPTH 0″ - 1.5″
W	ASPHALT WEDGING (SEE DETAIL)

NOTE: ALL SLOPES ARE 1:1 UNLESS OTHERWISE NOTED.

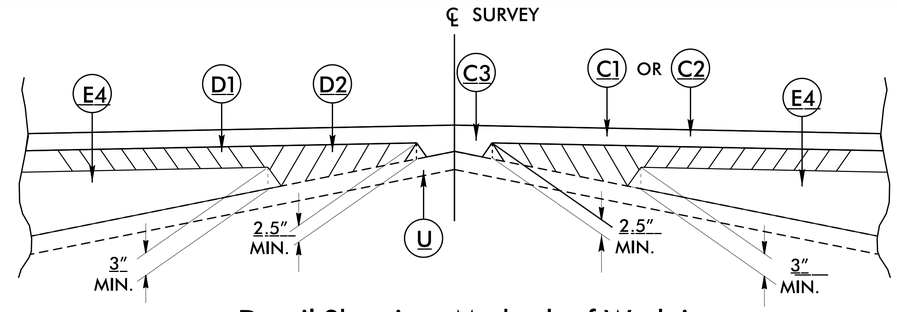

Detail Showing Method of Wedging

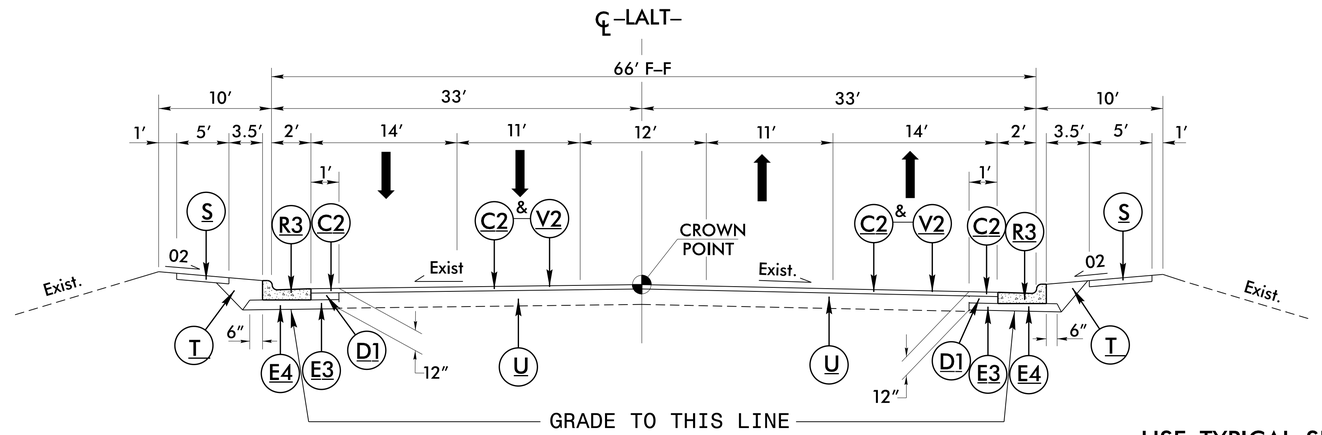

TYPICAL SECTION NO. 1

USE TYPICAL SECTION NO. 1

–LALT– Sta. 13+50.00 TO 14+00.00

MILL AND OVERLAY EXIST. –LALT– w/ V2 & C2

–LALT– STA. 12+00.00 TO 13+50.00
–LALT– STA. 66+10.00 TO 67+60.00

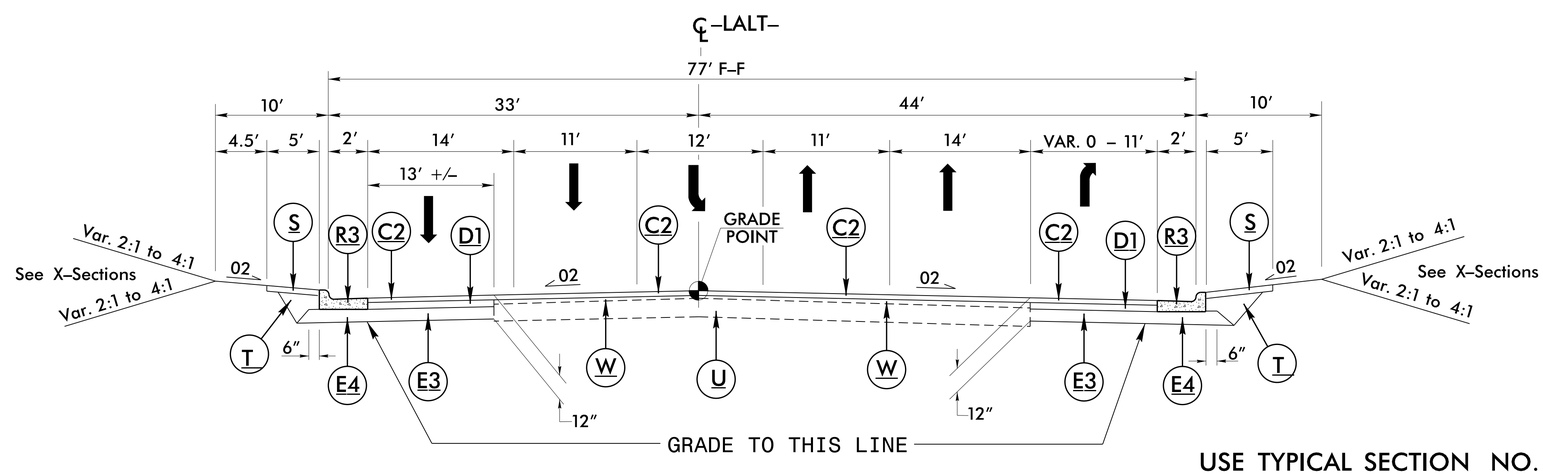

TYPICAL SECTION NO. 2

USE TYPICAL SECTION NO. 2

–LALT– Sta. 14+00.00 TO Sta. 15+00.00

5/14/99
14-MAY-2015 12:29
C:\Roadway Proj\u3308_rdy_typ.dgn
$$$$USERNAME$$$$

PROJECT REFERENCE NO.	SHEET NO.
U-3308	2A-2
R/W SHEET NO.	

ROADWAY DESIGN ENGINEER — NORTH CAROLINA PROFESSIONAL SEAL 014571 ENGINEER James A. Speer — DocuSigned by: James Speer 11/23/2015

PAVEMENT DESIGN ENGINEER — NORTH CAROLINA PROFESSIONAL SEAL 031484 ENGINEER VLADIMIR G. MITCHEV — DocuSigned by: Vladimir G Mitchev 11/19/2015

C1	1.5″ TYPE S9.5B
C2	3″ TYPE S9.5B
C3	VARIABLE DEPTH S9.5B
D1	4″ TYPE I19.0B
D2	VARIABLE DEPTH TYPE I19.0B
E1	3″ TYPE B25.0B
E2	4″ TYPE B25.0B
E3	5″ TYPE B25.0B
E4	VAR. DEPTH TYPE B25.0B
J	8″ AGGREGATE BASE COURSE
K	SUBGRADE STABILIZATION
L	CLASS IV SUBGRADE STABILIZATION
N1	GEOTEXTILE FOR SOIL STABILIZATION
N2	GEOTEXTILE FOR PAVEMENT STABILIZATION
R1	PROP. 1′6″ CONC. CURB AND GUTTER
R2	EXIST. 2′6″ CONC. CURB AND GUTTER
R3	PROP. 2′6″ CONC. CURB AND GUTTER
R4	PROP. CONCRETE ISLAND
S	PROPOSED CONCRETE SIDEWALK
T	EARTH MATERIAL
U	EXISTING PAVEMENT
V1	PROP. 1.5″ ASPHALT MILLING
V2	PROP. 3″ ASPHALT MILLING
V3	PROP. ASPHALT MILLING VARIABLE
W	ASPHALT WEDGING (SEE DETAIL)

NOTE: ALL SLOPES ARE 1:1 UNLESS OTHERWISE NOTED.

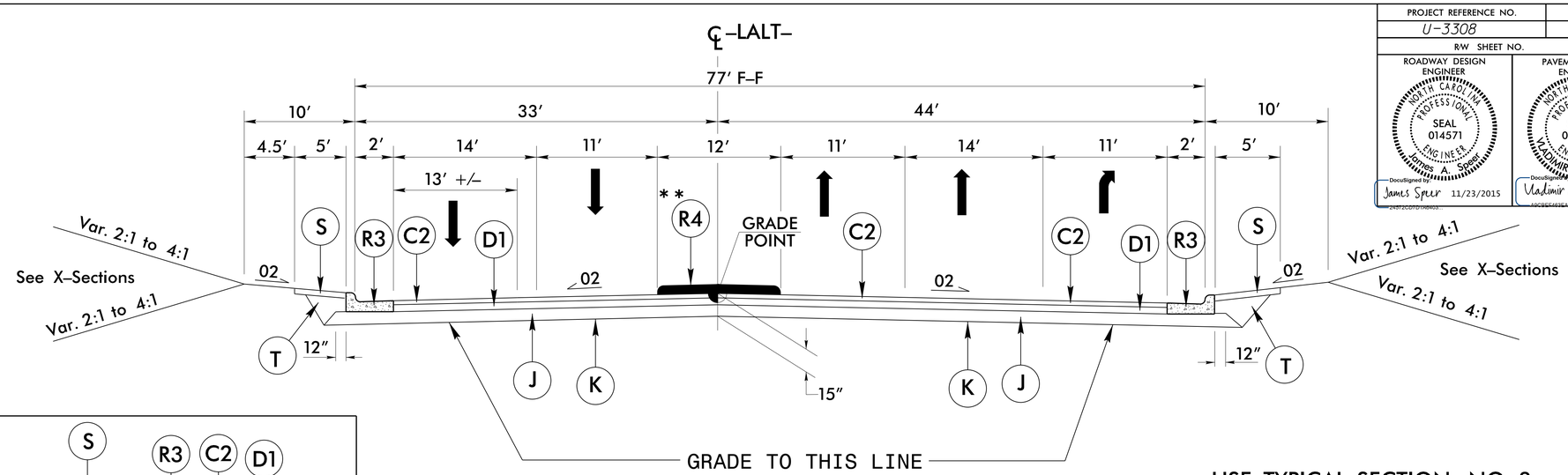

TYPICAL SECTION NO. 3

USE TYPICAL SECTION NO. 3

–LALT– Sta. 15+00.00 TO Sta. 15+55.95 (Begin Bridge)
–LALT– Sta. 17+36.20 (End Bridge) TO Sta. 17+86.00

** SEE PLANS FOR PROPOSED CONCRETE ISLAND LOCATION

(SEE PLAN VIEW AND INTERSECTION DETAILS FOR SIDEWALK TRANSITIONS)

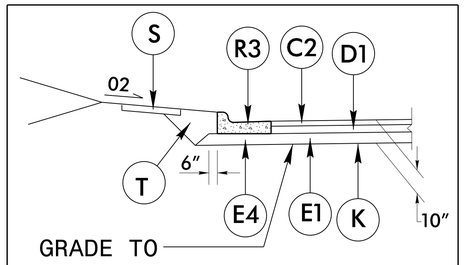

Alternate Mainline Pavement Design

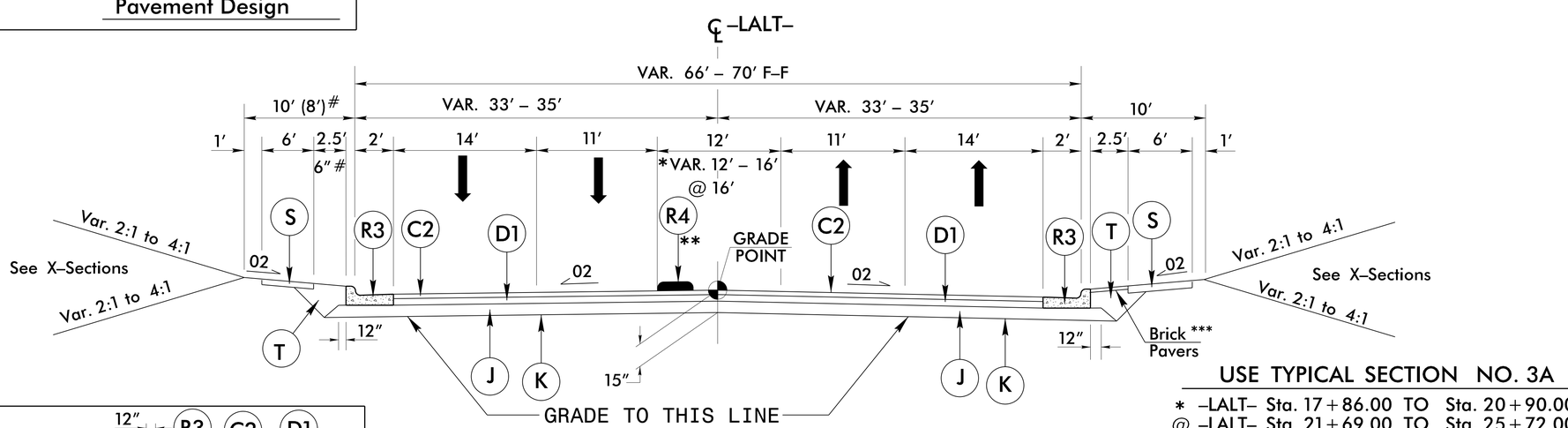

TYPICAL SECTION NO. 3A

USE TYPICAL SECTION NO. 3A

* –LALT– Sta. 17+86.00 TO Sta. 20+90.00
@ –LALT– Sta. 21+69.00 TO Sta. 25+72.00
–LALT– Sta. 29+76.00 TO Sta. 38+67.00
–LALT– Sta. 46+76.00 TO Sta. 50+83.00
–LALT– Sta. 55+22.00 TO Sta. 59+12.00
–LALT– Sta. 61+67.00 TO Sta. 64+20.00
\# –LALT– Sta. 46+76.00 TO Sta. 48+36.77 Lt

** SEE PLANS FOR PROPOSED CONCRETE ISLAND LOCATION

* MEDIAN TAPER STA. 19+28.00 TO 21+24.00 –LALT–

*** NOTE: BEGIN BRICK PAVERS NORTH OF THE –LALT– (ALSTON AVE) AND –Y4–/–Y5– (MAIN ST) INTERSECTION. END BRICK PAVERS SOUTH OF THE –LALT– (ALSTON AVE) AND –Y14–/–Y15– (TAYLOR ST.) INTERSECTION

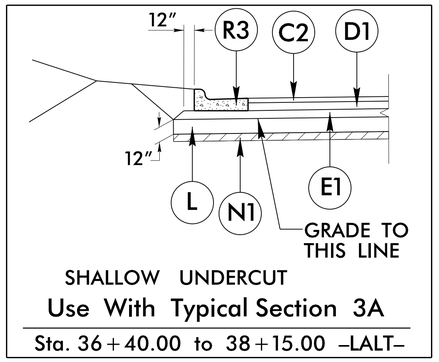

SHALLOW UNDERCUT

Use With Typical Section 3A

Sta. 36+40.00 to 38+15.00 –LALT–

5/14/99
18-MAY-2015 08:19
$$$$USERNAME$$$$
$$$$DGNFILE$$$$

PROJECT REFERENCE NO.	SHEET NO.
U-3308	2A-3
R/W SHEET NO.	
ROADWAY DESIGN ENGINEER	PAVEMENT DESIGN ENGINEER
NORTH CAROLINA PROFESSIONAL SEAL 014571 ENGINEER James A. Speer	NORTH CAROLINA PROFESSIONAL SEAL 031484 ENGINEER VLADIMIR G. MITCHEV
DocuSigned by: James Speer 11/23/2015	DocuSigned by: Vladimir G Mitchev 11/19/2015

C1	1.5″ TYPE S9.5B
C2	3″ TYPE S9.5B
C3	VARIABLE DEPTH S9.5B
D1	4″ TYPE I19.0B
D2	VARIABLE DEPTH TYPE I19.0B
E1	3″ TYPE B25.0B
E2	4″ TYPE B25.0B
E3	5″ TYPE B25.0B
E4	VAR. DEPTH TYPE B25.0B
J	8″ AGGREGATE BASE COURSE
K	SUBGRADE STABILIZATION
L	CLASS IV SUBGRADE STABILIZATION
N1	GEOTEXTILE FOR SOIL STABILIZATION
N2	GEOTEXTILE FOR PAVEMENT STABILIZATION
R1	PROP. 1′6″ CONC. CURB AND GUTTER
R2	EXIST. 2′6″ CONC. CURB AND GUTTER
R3	PROP. 2′6″ CONC. CURB AND GUTTER
R4	PROP. CONCRETE ISLAND
S	PROPOSED CONCRETE SIDEWALK
T	EARTH MATERIAL
U	EXISTING PAVEMENT
V1	PROP. 1.5″ ASPHALT MILLING
V2	PROP. 3″ ASPHALT MILLING
V3	PROP. ASPHALT MILLING VARIABLE
W	ASPHALT WEDGING (SEE DETAIL)

NOTE: ALL SLOPES ARE 1:1 UNLESS OTHERWISE NOTED.

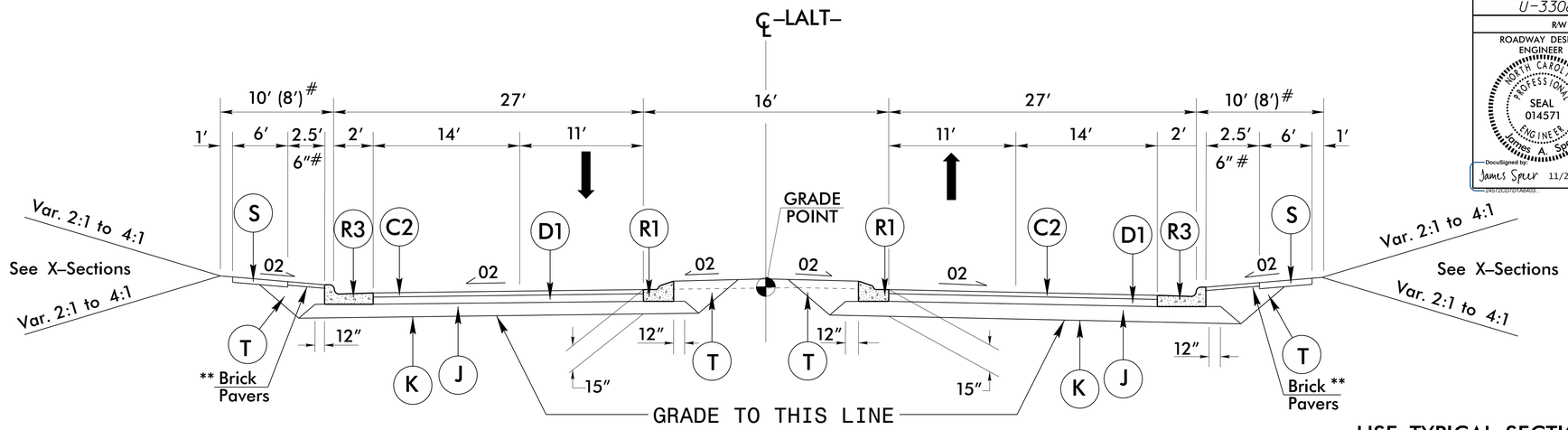

TYPICAL SECTION NO. 4

USE TYPICAL SECTION NO. 4

–LALT– Sta. 20+90.00 TO 22+37.00
–LALT– Sta. 25+72.00 TO 29+76.00
–LALT– Sta. 38+67.00 TO 41+24.64
#–LALT– Sta. 41+24.64 TO 46+76.00
–LALT– Sta. 50+83.00 TO 55+22.00
–LALT– Sta. 59+12.00 TO 61+67.00

** NOTE: BEGIN BRICK PAVERS NORTH OF THE –LALT– (ALSTON AVE) AND –Y4–/–Y5– (MAIN ST) INTERSECTION. END BRICK PAVERS SOUTH OF THE –LALT– (ALSTON AVE) AND –Y14–/–Y15– (TAYLOR ST.)

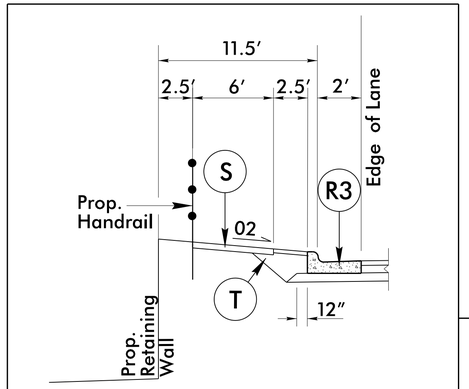

Use With Typical Sections 3A & #4

Sta. 49+72.00 to 52+50.00 Rt. –LALT–
Sta. 57+70.00 to 59+60.00 Rt. –LALT–

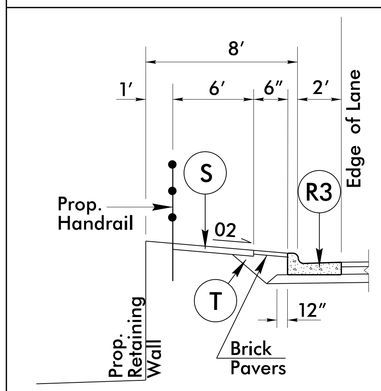

Use With Typical Sections 3A & #4

Sta. 37+32.00 to 40+30.00 Lt. –LALT–
Sta. 46+73.00 to 48+71.00 Rt. –LALT–

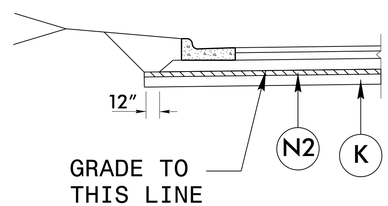

Geotextile for Pavement Stabilization (Contingencies)

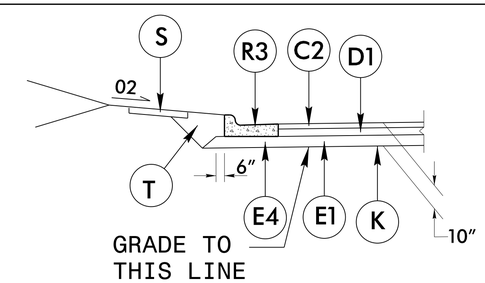

Alternate Mainline Pavement Design

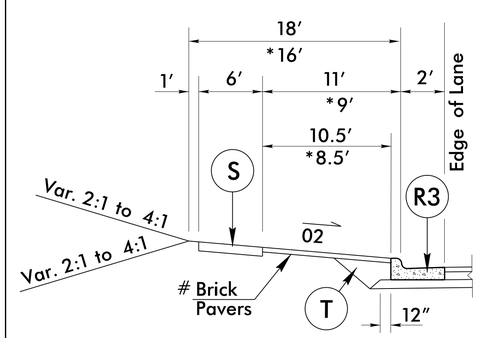

Use With Typical Section #3A & #4

Sta. 31+82.98 to 31+98.22 Rt. –LALT–
#Sta. 36+84.27 to 37+02.08 Rt. –LALT–
#*Sta. 41+03.96 to 41+19.84 Lt. –LALT–
#*Sta. 41+10.30 to 41+24.64 Rt. –LALT–
#* Sta. 48+36.77 to 48+53.77 Lt. –LALT–
Sta. 49+03.52 to 49+19.96 Rt. –LALT–
Sta. 53+73.72 to 53+93.72 Lt. –LALT–
Sta. 53+74.33 to 53+94.15 Rt. –LALT–
Sta. 56+72.59 to 56+87.72 Lt. –LALT–
Sta. 57+51.51 to 57+64.43 Rt. –LALT–
Sta. 63+30.32 to 63+45.23 Lt. –LALT–

5/14/99
18-MAY-2015 08:19
s:\Roadway\Proj\u3308_rdy_typ.dgn
$$$$USERNAME$$$$

PROJECT REFERENCE NO.	SHEET NO.
U-3308	2A-4
R/W SHEET NO.	

ROADWAY DESIGN ENGINEER
NORTH CAROLINA PROFESSIONAL SEAL 014571 ENGINEER James A. Speer
DocuSigned by: James Speer 11/23/2015

PAVEMENT DESIGN ENGINEER
NORTH CAROLINA PROFESSIONAL SEAL 031484 ENGINEER VLADIMIR G. MITCHEV
DocuSigned by: Vladimir G Mitchev 11/19/2015

C1	1.5″ TYPE S9.5B
C2	3″ TYPE S9.5B
C3	VARIABLE DEPTH S9.5B
D1	4″ TYPE I19.0B
D2	VARIABLE DEPTH TYPE I19.0B
E1	3″ TYPE B25.0B
E2	4″ TYPE B25.0B
E3	5″ TYPE B25.0B
E4	VAR. DEPTH TYPE B25.0B
J	8″ AGGREGATE BASE COURSE
K	SUBGRADE STABILIZATION
L	CLASS IV SUBGRADE STABILIZATION
N1	GEOTEXTILE FOR SOIL STABILIZATION
N2	GEOTEXTILE FOR PAVEMENT STABILIZATION
R1	PROP. 1′6″ CONC. CURB AND GUTTER
R2	EXIST. 2′6″ CONC. CURB AND GUTTER
R3	PROP. 2′6″ CONC. CURB AND GUTTER
R4	PROP. CONCRETE ISLAND
S	PROPOSED CONCRETE SIDEWALK
T	EARTH MATERIAL
U	EXISTING PAVEMENT
V1	PROP. 1.5″ ASPHALT MILLING
V2	PROP. 3″ ASPHALT MILLING
V3	PROP. ASPHALT MILLING VARIABLE
W	ASPHALT WEDGING (SEE DETAIL)

NOTE: ALL SLOPES ARE 1:1 UNLESS OTHERWISE NOTED.

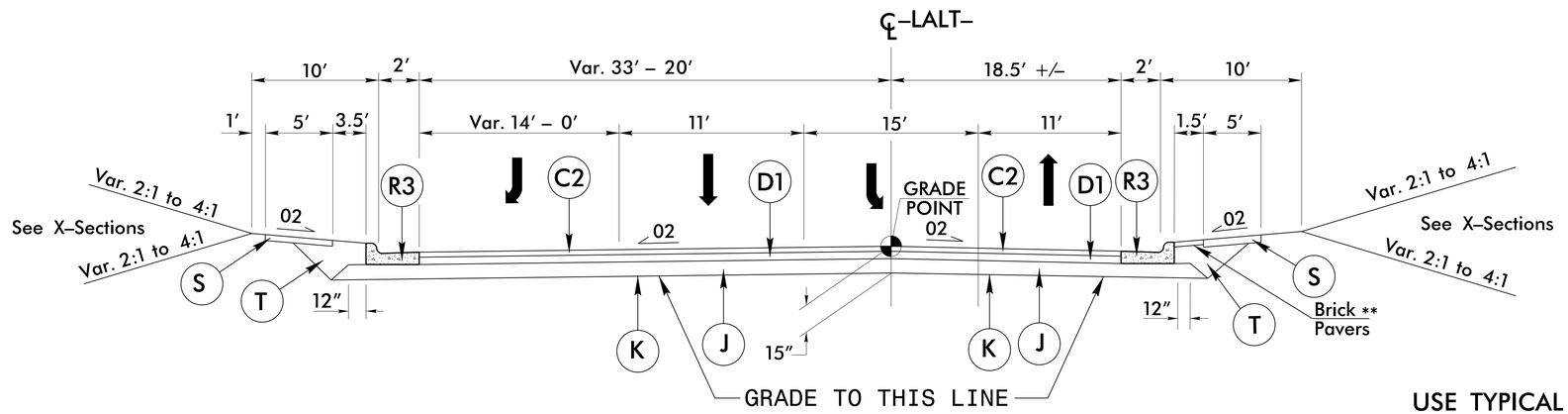

TYPICAL SECTION NO. 5

USE TYPICAL SECTION NO. 5
–LALT– Sta. 64+20.00 TO 66+10.00

** NOTE: BEGIN BRICK PAVERS NORTH OF THE –LALT– (ALSTON AVE) AND –Y22– (HOLLOWAY ST) INTERSECTION. END BRICK PAVERS –LALT– 66+10.00 (END OF PROJECT).

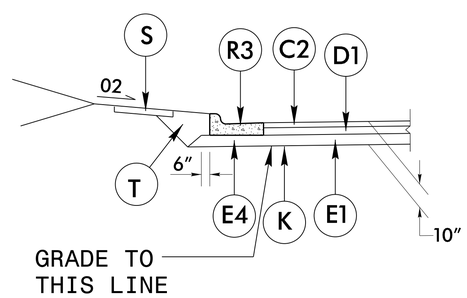

Alternate Mainline pavement Design

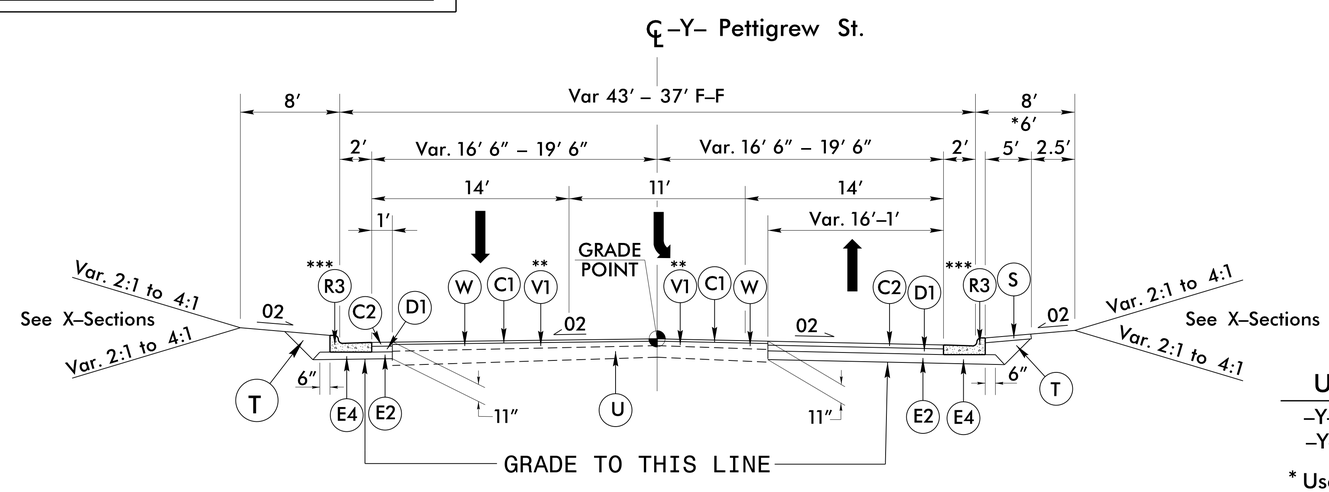

TYPICAL SECTION NO. 6

USE TYPICAL SECTION NO. 6
–Y– Pettigrew St. Sta. 12+00.00 to 15+00.00
–Y– Pettigrew St. Sta. 20+50.00 to 24+50.00

* Use 6′ Berm Sta. 21+25.00 to 22+75.00 Rt.

** NOTE: TRANSITION BETWEEN EXISTING PAVEMENT AND TYP. SECTION NO. 6 USING (V1) AND (C1) AT
–Y– STA. 11+50 TO STA 12+00
–Y– STA. 24+50 TO STA. 25+00

*** NOTE: SEE PLANS FOR EXISTING CURB & GUTTER

5/14/99

14-MAY-2015 12:30
R:\Roadway\Proj\u3308_rdy_typ.dgn
$$$$USERNAME$$$$

PROJECT REFERENCE NO.	SHEET NO.
U-3308	2A-5
R/W SHEET NO.	
ROADWAY DESIGN ENGINEER	PAVEMENT DESIGN ENGINEER
NORTH CAROLINA PROFESSIONAL SEAL 014571 ENGINEER James A. Speer	NORTH CAROLINA PROFESSIONAL SEAL 031484 ENGINEER VLADIMIR G. MITCHEV
DocuSigned by: James Speer 11/23/2015	DocuSigned by: Vladimir G Mitchev 11/19/2015

C1	1.5" TYPE S9.5B
C2	3" TYPE S9.5B
C3	VARIABLE DEPTH S9.5B
D1	4" TYPE I19.0B
D2	VARIABLE DEPTH TYPE I19.0B
E1	3" TYPE B25.0B
E2	4" TYPE B25.0B
E3	5" TYPE B25.0B
E4	VAR. DEPTH TYPE B25.0B
J	8" AGGREGATE BASE COURSE
K	SUBGRADE STABILIZATION
L	CLASS IV SUBGRADE STABILIZATION
N1	GEOTEXTILE FOR SOIL STABILIZATION
N2	GEOTEXTILE FOR PAVEMENT STABILIZATION
R1	PROP. 1'6" CONC. CURB AND GUTTER
R2	EXIST. 2'6" CONC. CURB AND GUTTER
R3	PROP. 2'6" CONC. CURB AND GUTTER
R4	PROP. CONCRETE ISLAND
S	PROPOSED CONCRETE SIDEWALK
T	EARTH MATERIAL
U	EXISTING PAVEMENT
V1	PROP. 1.5" ASPHALT MILLING
V2	PROP. 3" ASPHALT MILLING
V3	PROP. ASPHALT MILLING VARIABLE
W	ASPHALT WEDGING (SEE DETAIL)

NOTE: ALL SLOPES ARE 1:1 UNLESS OTHERWISE NOTED.

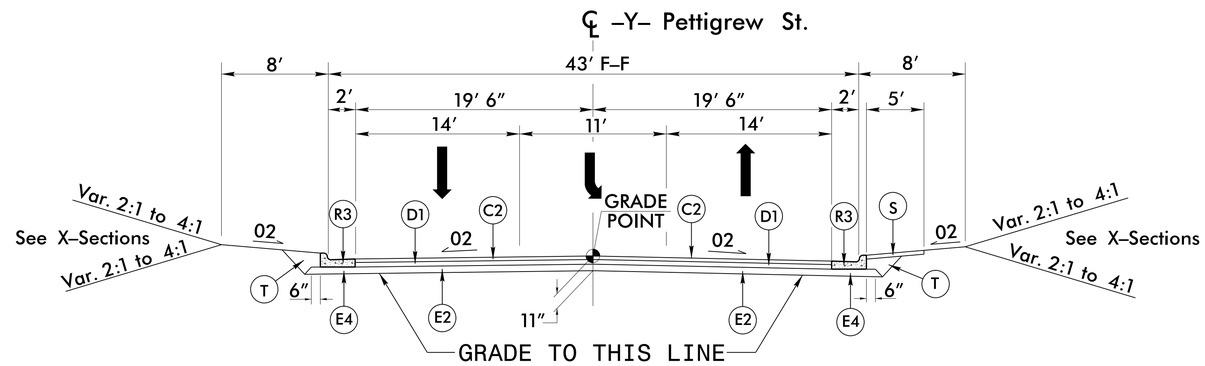

TYPICAL SECTION NO. 7

USE TYPICAL SECTION NO. 7

–Y– Pettigrew St. Sta. 15+00.00 to Sta. 16+27.05(Begin Bridge)
–Y– Pettigrew St. Sta. 17+84.55(End Bridge) to Sta. 20+50.00

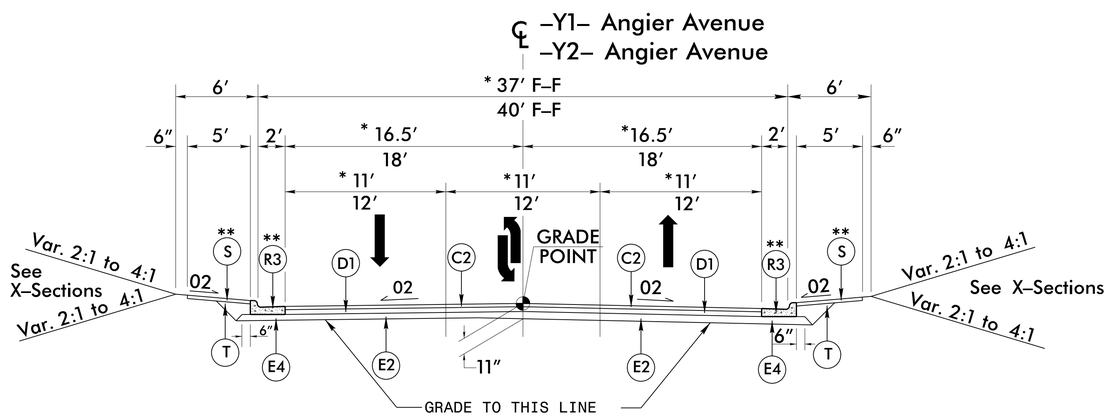

TYPICAL SECTION NO. 8

USE TYPICAL SECTION NO. 8

*–Y1– Angier Avenue Sta. 11+00.00 to 12+10.32
–Y2– Angier Avenue Sta. 10+76.99 to 11+00.00

** NOTE: SEE PLANS FOR EXISTING CURB & GUTTER AND EXISTING SIDEWALK

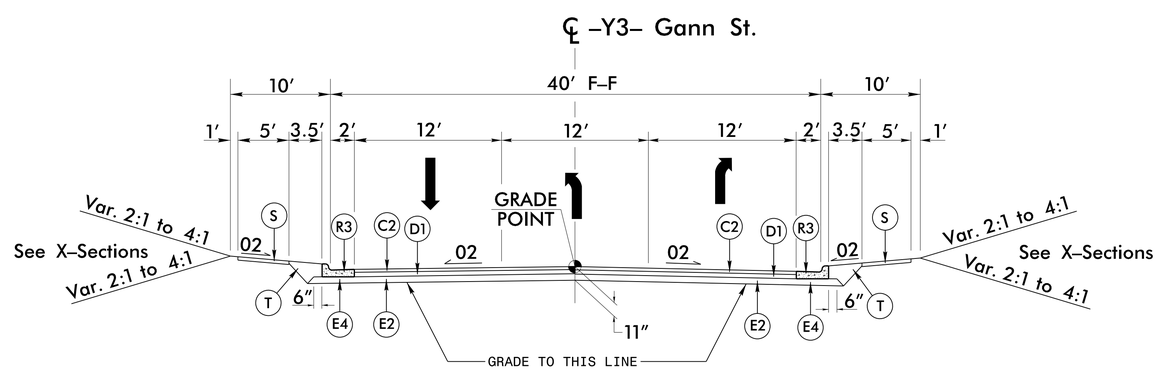

TYPICAL SECTION NO. 9

USE TYPICAL SECTION NO. 9

–Y3– Gann St. Sta. 10+65.00 to 11+79.87

5/14/99

14-MAY-2015 12:30
R:\Roadway\Proj\u3308_rdy_typ.dgn
$$$$USERNAME$$$$

PROJECT REFERENCE NO.	SHEET NO.
U-3308	2A-6
R/W SHEET NO.	
ROADWAY DESIGN ENGINEER	PAVEMENT DESIGN ENGINEER

NORTH CAROLINA PROFESSIONAL SEAL 014571 ENGINEER James A. Speer
DocuSigned by: James Speer 11/23/2015

NORTH CAROLINA PROFESSIONAL SEAL 031484 ENGINEER VLADIMIR G. MITCHEV
DocuSigned by: Vladimir G Mitchev 11/19/2015

C1	1.5" TYPE S9.5B
C2	3" TYPE S9.5B
C3	VARIABLE DEPTH S9.5B
D1	4" TYPE I19.0B
D2	VARIABLE DEPTH TYPE I19.0B
E1	3" TYPE B25.0B
E2	4" TYPE B25.0B
E3	5" TYPE B25.0B
E4	VAR. DEPTH TYPE B25.0B
J	8" AGGREGATE BASE COURSE
K	SUBGRADE STABILIZATION
L	CLASS IV SUBGRADE STABILIZATION
N1	GEOTEXTILE FOR SOIL STABILIZATION
N2	GEOTEXTILE FOR PAVEMENT STABILIZATION
R1	PROP. 1'6" CONC. CURB AND GUTTER
R2	EXIST. 2'6" CONC. CURB AND GUTTER
R3	PROP. 2'6" CONC. CURB AND GUTTER
R4	PROP. CONCRETE ISLAND
S	PROPOSED CONCRETE SIDEWALK
T	EARTH MATERIAL
U	EXISTING PAVEMENT
V1	PROP. 1.5" ASPHALT MILLING
V2	PROP. 3" ASPHALT MILLING
V3	PROP. ASPHALT MILLING VARIABLE
W	ASPHALT WEDGING (SEE DETAIL)

NOTE: ALL SLOPES ARE 1:1 UNLESS OTHERWISE NOTED.

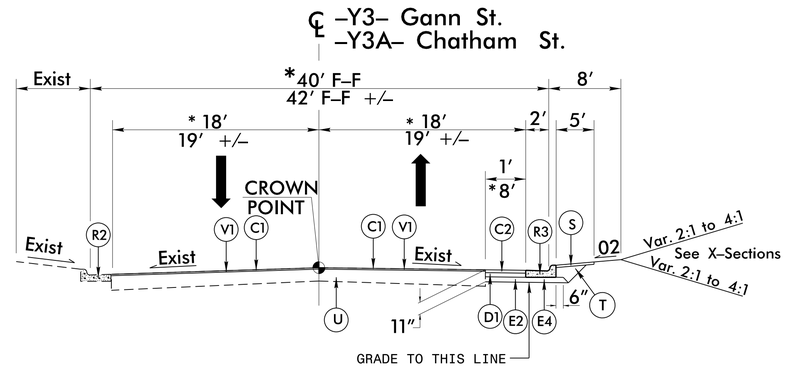

TYPICAL SECTION NO. 10

USE TYPICAL SECTION NO. 10

*–Y3– Gann St. Sta. 9+99.63 to 10+65.00
–Y3A– Chatham St. Sta. 10+00.00 to 11+50.00

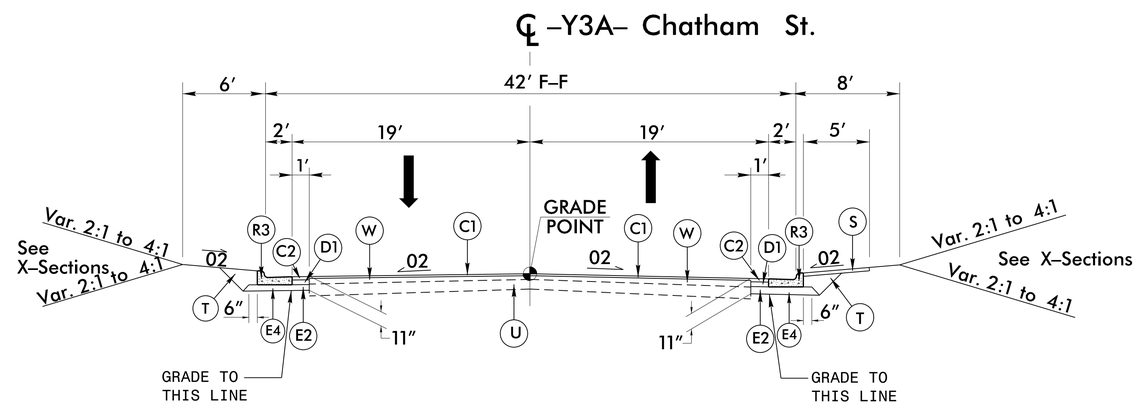

TYPICAL SECTION NO. 10A

USE TYPICAL SECTION NO. 10A

–Y3A– Chatham St. Sta. 11+50.00 to 12+31.63

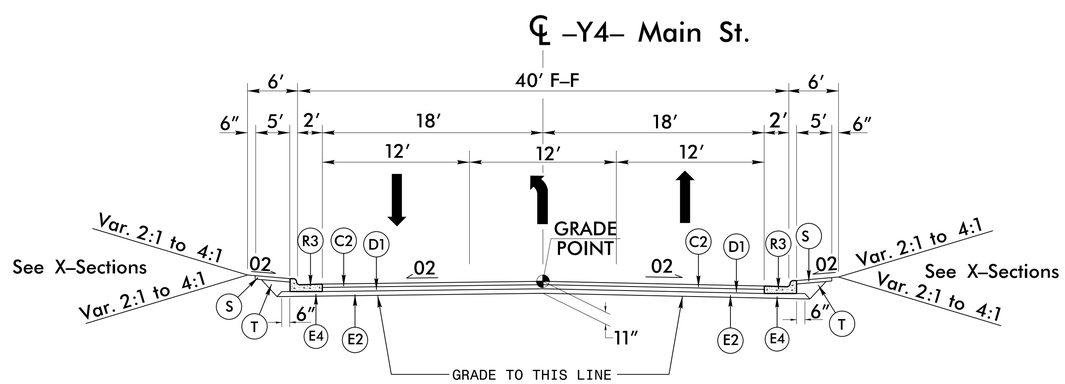

TYPICAL SECTION NO. 11

USE TYPICAL SECTION NO. 11

–Y4– Main St. Sta. 10+60.49 to 11+00.00

5/14/99

14-MAY-2015 12:30
R:\Roadway\Proj\u3308_rdy_typ.dgn
$$$$USERNAME$$$$

PROJECT REFERENCE NO.	SHEET NO.
U-3308	2A-7
R/W SHEET NO.	

ROADWAY DESIGN ENGINEER
NORTH CAROLINA PROFESSIONAL SEAL 014571 ENGINEER James A. Speer
DocuSigned by: James Speer 11/23/2015

PAVEMENT DESIGN ENGINEER
NORTH CAROLINA PROFESSIONAL SEAL 031484 ENGINEER VLADIMIR G. MITCHEV
DocuSigned by: Vladimir G Mitchev 11/19/2015

C1	1.5″ TYPE S9.5B
C2	3″ TYPE S9.5B
C3	VARIABLE DEPTH S9.5B
D1	4″ TYPE I19.0B
D2	VARIABLE DEPTH TYPE I19.0B
E1	3″ TYPE B25.0B
E2	4″ TYPE B25.0B
E3	5″ TYPE B25.0B
E4	VAR. DEPTH TYPE B25.0B
J	8″ AGGREGATE BASE COURSE
K	SUBGRADE STABILIZATION
L	CLASS IV SUBGRADE STABILIZATION
N1	GEOTEXTILE FOR SOIL STABILIZATION
N2	GEOTEXTILE FOR PAVEMENT STABILIZATION
R1	PROP. 1′6″ CONC. CURB AND GUTTER
R2	EXIST. 2′6″ CONC. CURB AND GUTTER
R3	PROP. 2′6″ CONC. CURB AND GUTTER
R4	PROP. CONCRETE ISLAND
S	PROPOSED CONCRETE SIDEWALK
T	EARTH MATERIAL
U	EXISTING PAVEMENT
V1	PROP. 1.5″ ASPHALT MILLING
V2	PROP. 3″ ASPHALT MILLING
V3	PROP. ASPHALT MILLING VARIABLE
W	ASPHALT WEDGING (SEE DETAIL)

NOTE: ALL SLOPES ARE 1:1 UNLESS OTHERWISE NOTED.

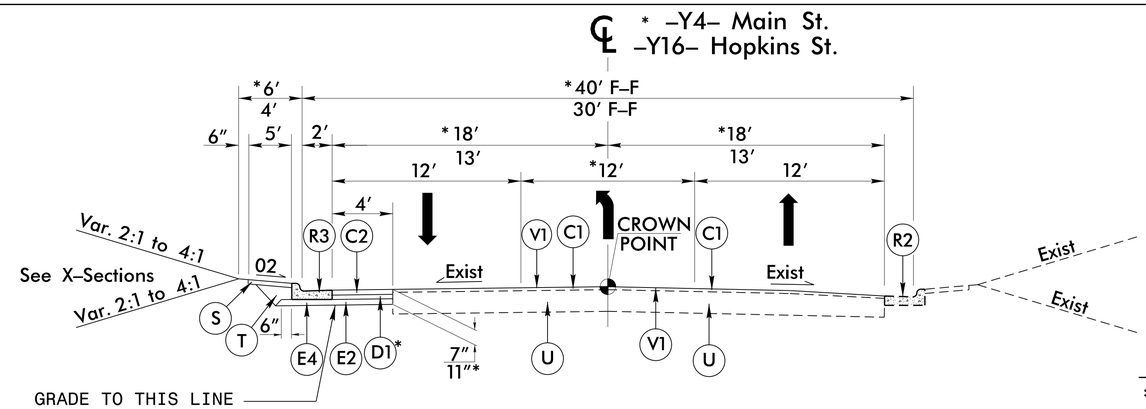

TYPICAL SECTION NO. 12

USE TYPICAL SECTION NO. 12

*–Y4– Main St. Sta. 11+00.00 to 12+45.00
–Y16– Hopkins St. Sta. 11+40.00 to 11+85.00
(No Sidewalk or D1 on –Y16–)

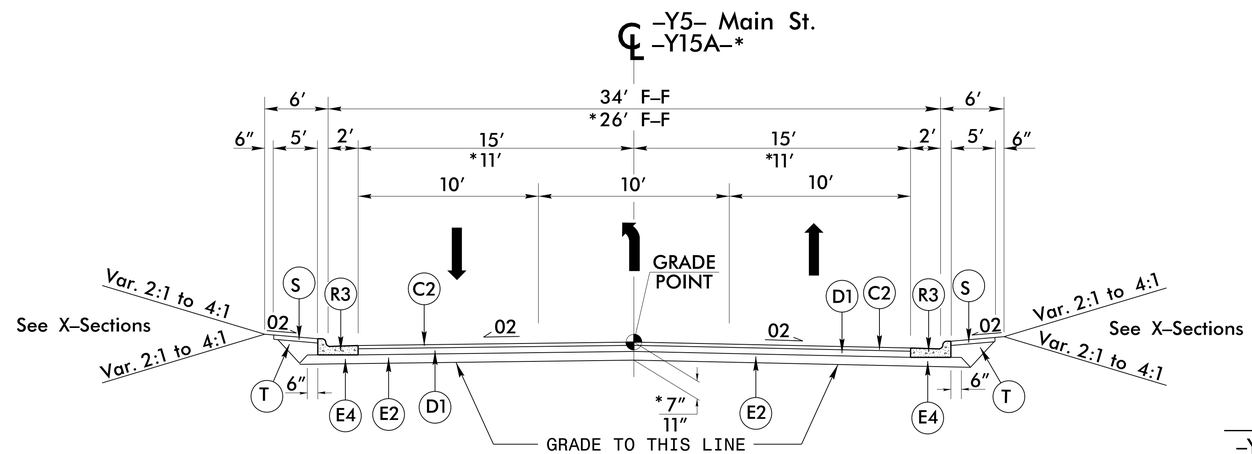

TYPICAL SECTION NO. 13

USE TYPICAL SECTION NO. 13

–Y5– Main St. Sta. 10+96.85 to 11+55.00
*–Y15A– Sta. 10+60.00 to 10+80.00
–Y15A– NO SIDEWALK

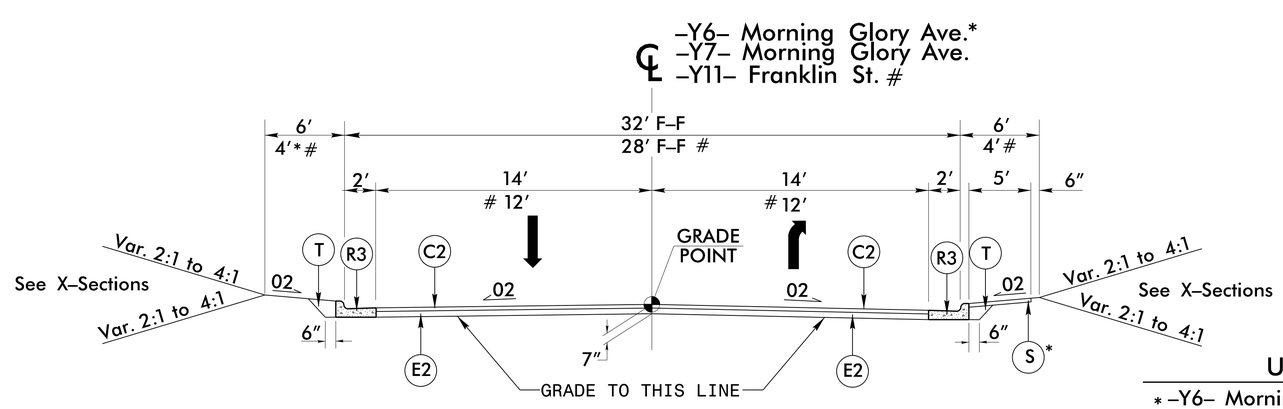

TYPICAL SECTION NO. 14

USE TYPICAL SECTION NO 14

*–Y6– Morning Glory Ave. Sta. 10+18.98 to 11+55.00
–Y7– Morning Glory Ave. Sta. 10+97.67 to 12+50.00
#–Y11– Franklin St. Sta. 10+76.87 to 10+90.00
Overlay –Y6– from 11+55.00 to 11+65.00 w/C2

5/14/99

14-MAY-2015 12:30
$$$$USERNAME$$$$
H:\Roadway\Proj\u3308_rdy_typ.dgn

PROJECT REFERENCE NO.	SHEET NO.
U-3308	2A-8
R/W SHEET NO.	
ROADWAY DESIGN ENGINEER	PAVEMENT DESIGN ENGINEER

NORTH CAROLINA PROFESSIONAL SEAL 014571 ENGINEER James A. Speer
DocuSigned by: James Speer 11/23/2015

NORTH CAROLINA PROFESSIONAL SEAL 031484 ENGINEER VLADIMIR G. MITCHEV
DocuSigned by: Vladimir G Mitchev 11/19/2015

5/14/99

C1	1.5" TYPE S9.5B
C2	3" TYPE S9.5B
C3	VARIABLE DEPTH S9.5B
D1	4" TYPE I19.0B
D2	VARIABLE DEPTH TYPE I19.0B
E1	3" TYPE B25.0B
E2	4" TYPE B25.0B
E3	5" TYPE B25.0B
E4	VAR. DEPTH TYPE B25.0B
J	8" AGGREGATE BASE COURSE
K	SUBGRADE STABILIZATION
L	CLASS IV SUBGRADE STABILIZATION
N1	GEOTEXTILE FOR SOIL STABILIZATION
N2	GEOTEXTILE FOR PAVEMENT STABILIZATION
R1	PROP. 1'6" CONC. CURB AND GUTTER
R2	EXIST. 2'6" CONC. CURB AND GUTTER
R3	PROP. 2'6" CONC. CURB AND GUTTER
R4	PROP. CONCRETE ISLAND
S	PROPOSED CONCRETE SIDEWALK
T	EARTH MATERIAL
U	EXISTING PAVEMENT
V1	PROP. 1.5" ASPHALT MILLING
V2	PROP. 3" ASPHALT MILLING
V3	PROP. ASPHALT MILLING VARIABLE
W	ASPHALT WEDGING (SEE DETAIL)

NOTE: ALL SLOPES ARE 1:1 UNLESS OTHERWISE NOTED.

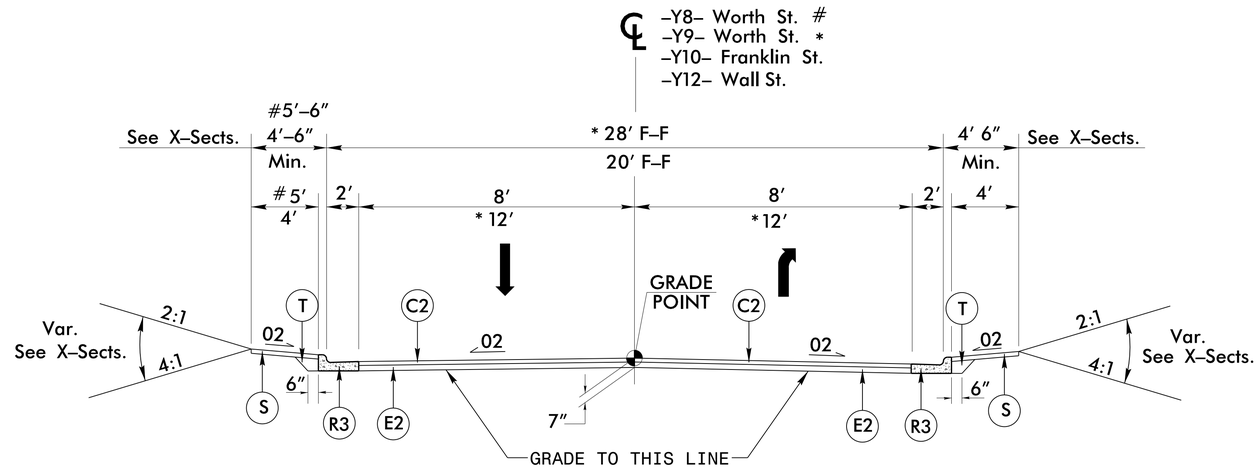

TYPICAL SECTION NO. 15

USE TYPICAL SECTION NO. 15

#–Y8– Worth St. Sta. 10+14.08 to 12+55.00
*–Y9– Worth St. Sta. 10+92.59 to 11+25.00
–Y10– Franklin St. Sta. 10+29.46 to 10+90.00
–Y12– Wall St. Sta. 10+51.06 to 10+80.00

NO PROPOSED SIDEWALK ON –Y9–

Overlay –Y9– from Sta. 11+25 to 11+35 with (C1)

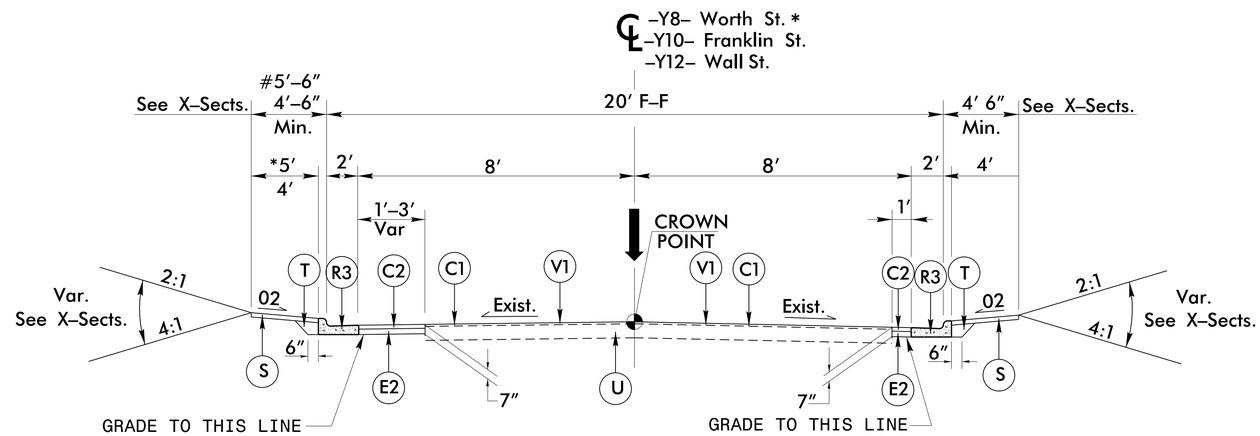

TYPICAL SECTION NO. 16

USE TYPICAL SECTION NO. 16

* –Y8– Worth St. Sta. 12+55.00 to 13+89.00
–Y10– Franklin St. Sta. 10+90.00 to 14+05.00
–Y12– Wall St. Sta. 10+80.00 to 14+20.00

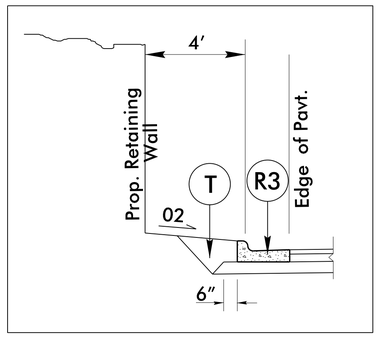

USE WITH TYPICAL SECTION NO. 17
–Y14– Taylor St. Sta. 10+44.00 to 11+08.00 Lt.

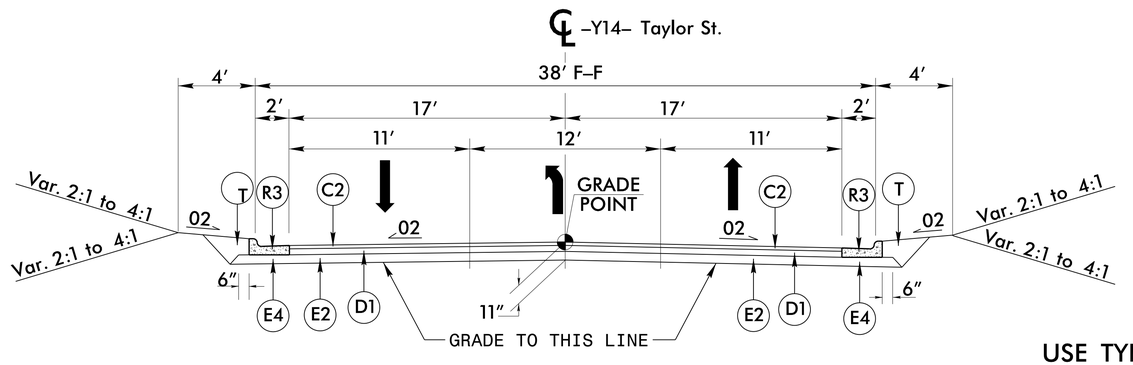

TYPICAL SECTION NO. 17

USE TYPICAL SECTION NO. 17

–Y14– Taylor St. Sta. 10+82.21 to 11+40.00

14-MAY-2015 12:30
R:\Roadway\Proj\u3308_rdy_typ.dgn
$$$$USERNAME$$$$

PROJECT REFERENCE NO.	SHEET NO.
U-3308	2A-9
R/W SHEET NO.	

ROADWAY DESIGN ENGINEER — NORTH CAROLINA PROFESSIONAL SEAL 014571 ENGINEER James A. Speer — DocuSigned by: James Speer 11/23/2015

PAVEMENT DESIGN ENGINEER — NORTH CAROLINA PROFESSIONAL SEAL 031484 ENGINEER VLADIMIR G. MITCHEV — DocuSigned by: Vladimir G Mitchev 11/19/2015

C1	1.5″ TYPE S9.5B
C2	3″ TYPE S9.5B
C3	VARIABLE DEPTH S9.5B
D1	4″ TYPE I19.0B
D2	VARIABLE DEPTH TYPE I19.0B
E1	3″ TYPE B25.0B
E2	4″ TYPE B25.0B
E3	5″ TYPE B25.0B
E4	VAR. DEPTH TYPE B25.0B
J	8″ AGGREGATE BASE COURSE
K	SUBGRADE STABILIZATION
L	CLASS IV SUBGRADE STABILIZATION
N1	GEOTEXTILE FOR SOIL STABILIZATION
N2	GEOTEXTILE FOR PAVEMENT STABILIZATION
R1	PROP. 1′6″ CONC. CURB AND GUTTER
R2	EXIST. 2′6″ CONC. CURB AND GUTTER
R3	PROP. 2′6″ CONC. CURB AND GUTTER
R4	PROP. CONCRETE ISLAND
S	PROPOSED CONCRETE SIDEWALK
T	EARTH MATERIAL
U	EXISTING PAVEMENT
V1	PROP. 1.5″ ASPHALT MILLING
V2	PROP. 3″ ASPHALT MILLING
V3	PROP. ASPHALT MILLING VARIABLE
W	ASPHALT WEDGING (SEE DETAIL)

NOTE: ALL SLOPES ARE 1:1 UNLESS OTHERWISE NOTED.

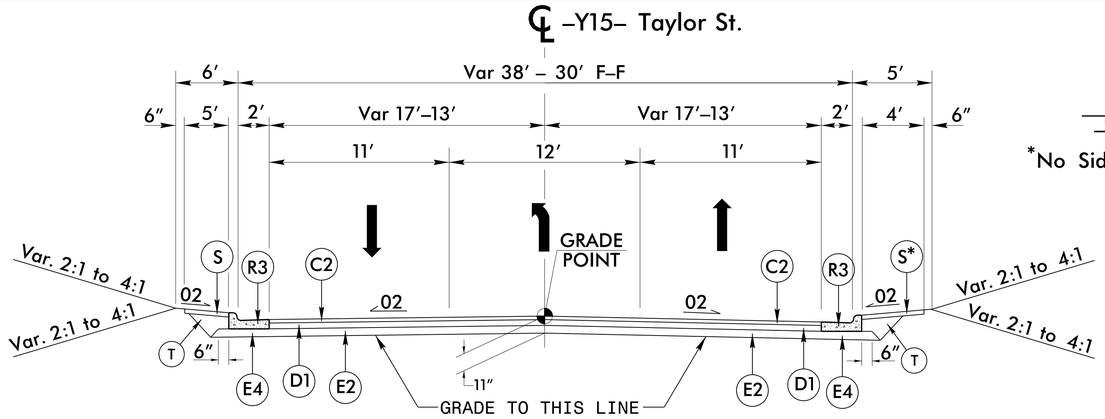

TYPICAL SECTION NO. 18

USE TYPICAL SECTION NO. 18

–Y15– Taylor St. Sta. 10+65.03 to 16+40.00

*No Sidewalk –Y15– Sta. 13+80.00 to 16+40.00 Rt.

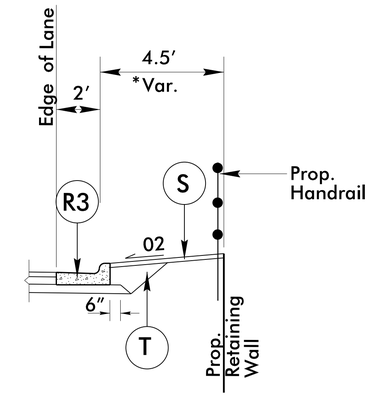

Use With Typical Section # 18

Sta. 46+73.00 Rt. –LALT– TO 11+25.00 –Y15–

*Sta 48+21.00 –LALT– to Sta. 10+79.00 –Y15–

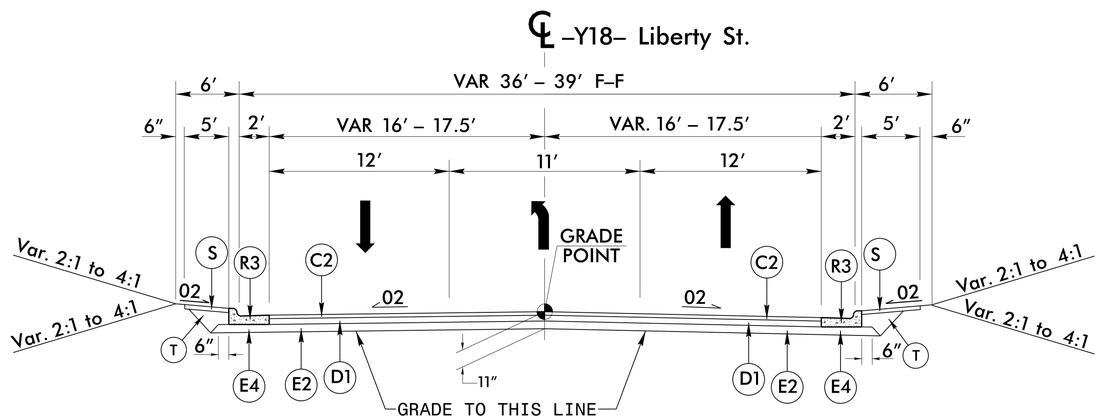

TYPICAL SECTION NO. 19

USE TYPICAL SECTION NO. 19

–Y18– Liberty St. Sta. 10+20.00 to 13+22.97

–Y18– Liberty St. Sta. 14+45.35 to 15+15.00

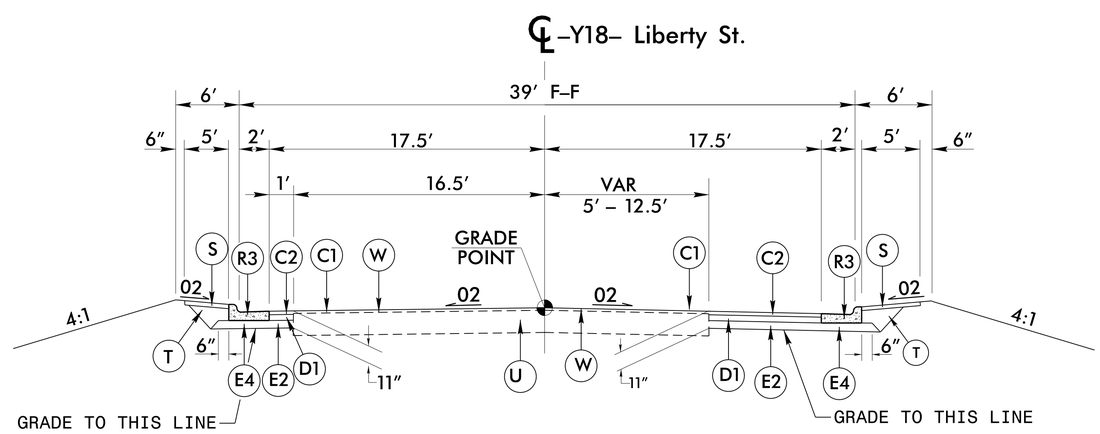

TYPICAL SECTION NO. 20

USE TYPICAL SECTION NO. 20

–Y18– Liberty St. Sta. 15+15.00 to 16+30.00

TRANSITION TO TYPICAL NO. 21:

–Y18– Liberty St. Sta. 16+30.00 to 17+05.00

5/14/99

14-MAY-2015 12:30
R:\Roadway\Proj\u3308_rdy_typ.dgn
$$$$USERNAME$$$$

PROJECT REFERENCE NO.	SHEET NO.
U-3308	2A-10
R/W SHEET NO.	

ROADWAY DESIGN ENGINEER
NORTH CAROLINA PROFESSIONAL SEAL 014571 ENGINEER James A. Speer
DocuSigned by: James Speer 11/23/2015

PAVEMENT DESIGN ENGINEER
NORTH CAROLINA PROFESSIONAL SEAL 031484 ENGINEER VLADIMIR G. MITCHEV
DocuSigned by: Vladimir G Mitchev 11/19/2015

C1	1.5″ TYPE S9.5B
C2	3″ TYPE S9.5B
C3	VARIABLE DEPTH S9.5B
D1	4″ TYPE I19.0B
D2	VARIABLE DEPTH TYPE I19.0B
E1	3″ TYPE B25.0B
E2	4″ TYPE B25.0B
E3	5″ TYPE B25.0B
E4	VAR. DEPTH TYPE B25.0B
J	8″ AGGREGATE BASE COURSE
K	SUBGRADE STABILIZATION
L	CLASS IV SUBGRADE STABILIZATION
N1	GEOTEXTILE FOR SOIL STABILIZATION
N2	GEOTEXTILE FOR PAVEMENT STABILIZATION
R1	PROP. 1′6″ CONC. CURB AND GUTTER
R2	EXIST. 2′6″ CONC. CURB AND GUTTER
R3	PROP. 2′6″ CONC. CURB AND GUTTER
R4	PROP. CONCRETE ISLAND
S	PROPOSED CONCRETE SIDEWALK
T	EARTH MATERIAL
U	EXISTING PAVEMENT
V1	PROP. 1.5″ ASPHALT MILLING
V2	PROP. 3″ ASPHALT MILLING
V3	PROP. ASPHALT MILLING VARIABLE
W	ASPHALT WEDGING (SEE DETAIL)

NOTE: ALL SLOPES ARE 1:1 UNLESS OTHERWISE NOTED.

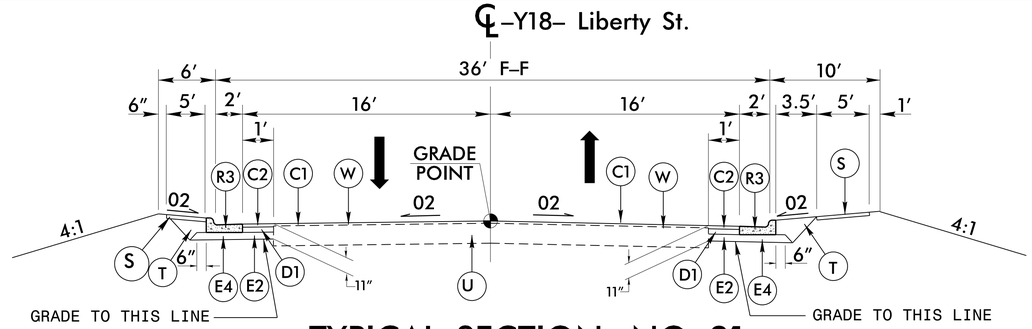

TYPICAL SECTION NO. 21

USE TYPICAL SECTION NO. 21

–Y18– Liberty St. Sta. 17+05.00 to 17+83.00

NOTE: USE (V1) AS DIRECTED BY ENGINEER TO TIE TO EXIST. PAVEMENT

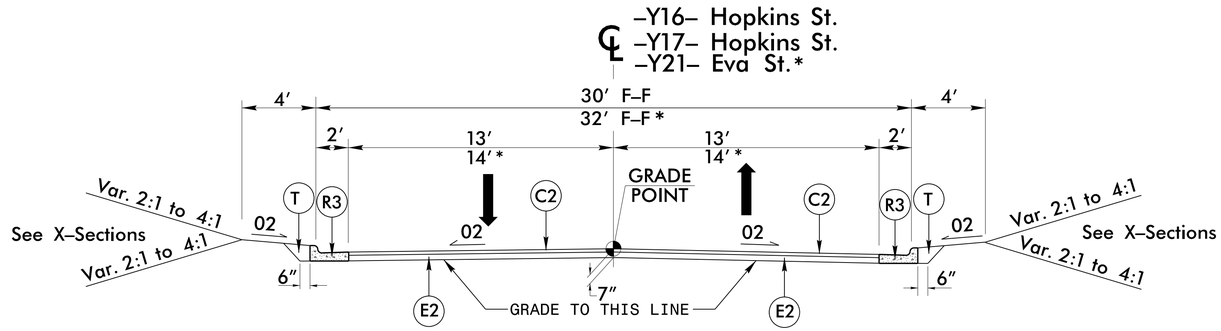

TYPICAL SECTION NO. 22

USE TYPICAL SECTION NO. 22

–Y16– Hopkins St. Sta. 10+51.06 to 11+40.00
–Y17– Hopkins St. Sta. 10+45.70 to 11+45.00
*–Y21– Eva St. Sta. 10+54.93 to 11+25.00

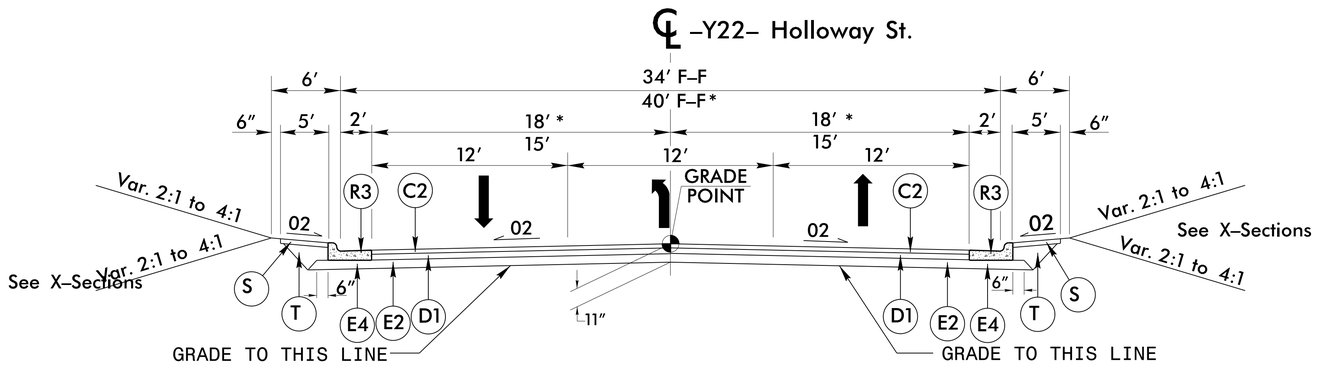

TYPICAL SECTION NO. 23

USE TYPICAL SECTION NO. 23

–Y22– Holloway St. Sta. 13+00.00 to 13+50.36
* –Y22– Holloway St. Sta. 15+10.34 to 16+00.00

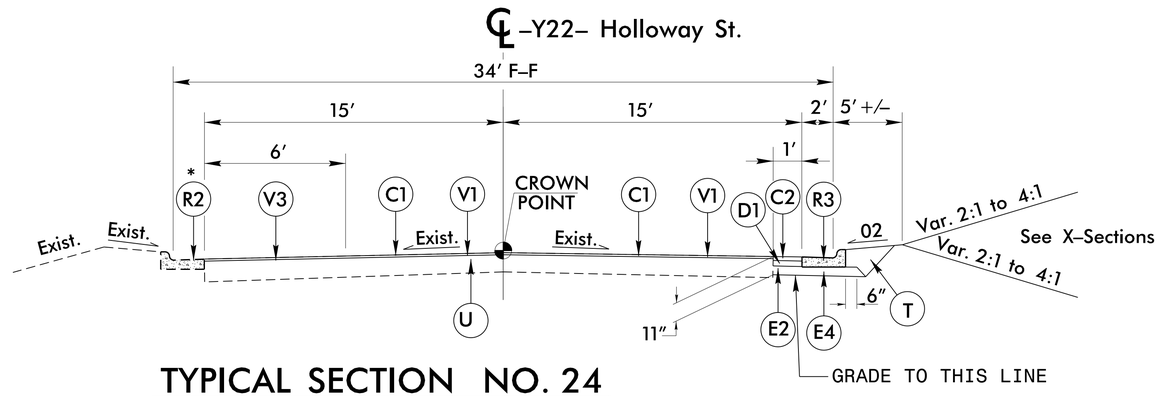

TYPICAL SECTION NO. 24

USE TYPICAL SECTION NO. 24

–Y22– Holloway St. Sta. 12+55.00 to 13+00.00

* NOTE: SEE PLANS FOR EXISTING CURB & GUTTER AND EXISTING SIDEWALK

5/14/99
14-MAY-2015 12:30
R:\Roadway\Proj\u3308_rdy_typ.dgn
$$$$USERNAME$$$$

PROJECT REFERENCE NO.	SHEET NO.
U-3308	2A-11
R/W SHEET NO.	
ROADWAY DESIGN ENGINEER	PAVEMENT DESIGN ENGINEER
NORTH CAROLINA PROFESSIONAL SEAL 014571 ENGINEER James A. Speer	NORTH CAROLINA PROFESSIONAL SEAL 031484 ENGINEER VLADIMIR G. MITCHEV
DocuSigned by: James Speer 11/23/2015	DocuSigned by: Vladimir G Mitchev 11/19/2015

C1	1.5" TYPE S9.5B
C2	3" TYPE S9.5B
C3	VARIABLE DEPTH S9.5B
D1	4" TYPE I19.0B
D2	VARIABLE DEPTH TYPE I19.0B
E1	3" TYPE B25.0B
E2	4" TYPE B25.0B
E3	5" TYPE B25.0B
E4	VAR. DEPTH TYPE B25.0B
J	8" AGGREGATE BASE COURSE
K	SUBGRADE STABILIZATION
L	CLASS IV SUBGRADE STABILIZATION
N1	GEOTEXTILE FOR SOIL STABILIZATION
N2	GEOTEXTILE FOR PAVEMENT STABILIZATION
R1	PROP. 1'6" CONC. CURB AND GUTTER
R2	EXIST. 2'6" CONC. CURB AND GUTTER
R3	PROP. 2'6" CONC. CURB AND GUTTER
R4	PROP. CONCRETE ISLAND
S	PROPOSED CONCRETE SIDEWALK
T	EARTH MATERIAL
U	EXISTING PAVEMENT
V1	PROP. 1.5" ASPHALT MILLING
V2	PROP. 3" ASPHALT MILLING
V3	PROP. ASPHALT MILLING VARIABLE
W	ASPHALT WEDGING (SEE DETAIL)

NOTE: ALL SLOPES ARE 1:1 UNLESS OTHERWISE NOTED.

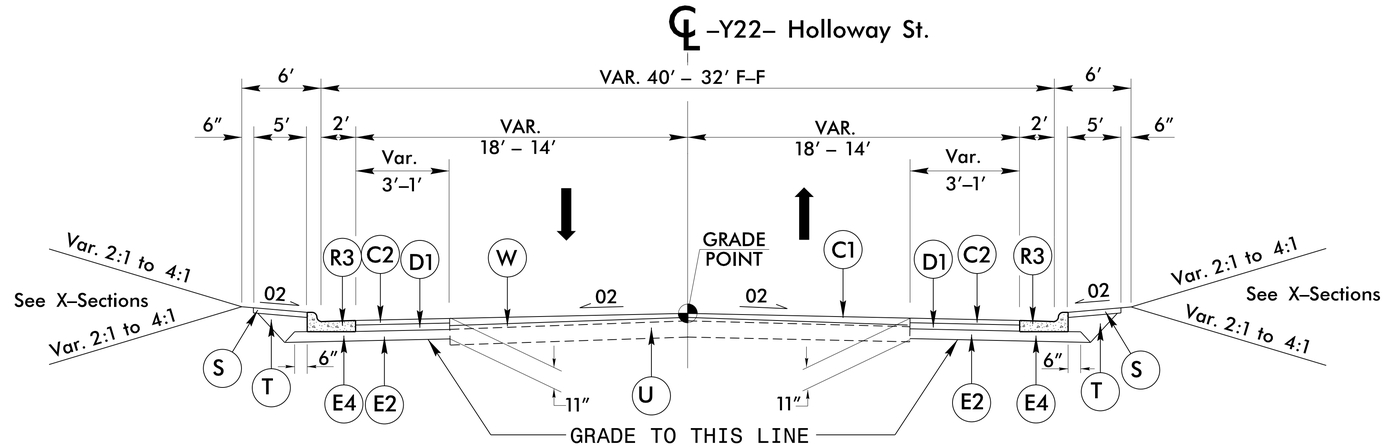

TYPICAL SECTION NO. 25

USE TYPICAL SECTION NO. 25

-Y22- Holloway St. Sta. 16+00.00 to 16+90.00

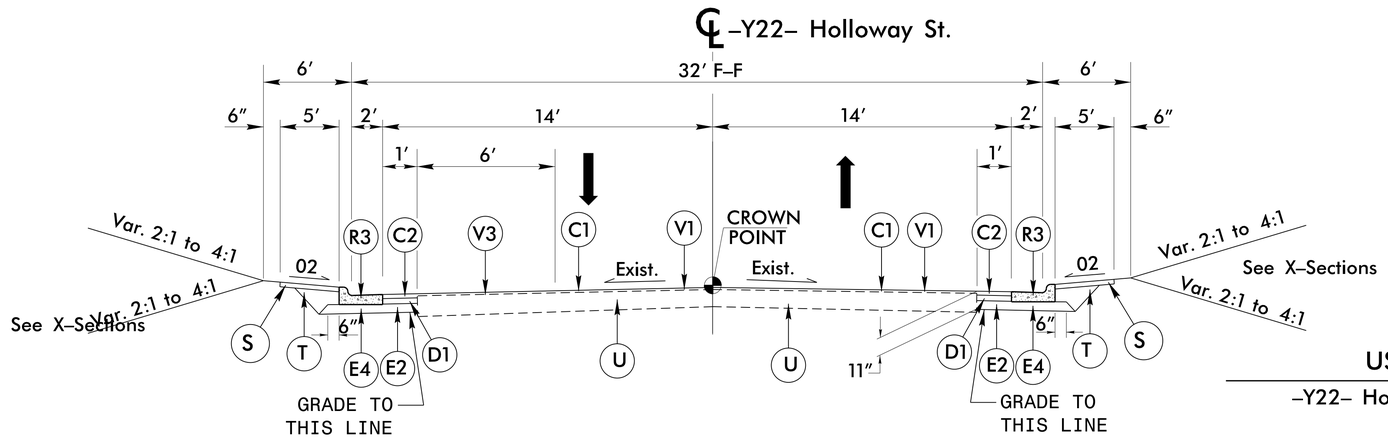

TYPICAL SECTION NO. 25A

USE TYPICAL SECTION NO. 25A

-Y22- Holloway St. Sta. 16+90.00 to 18+40.00 Rt.

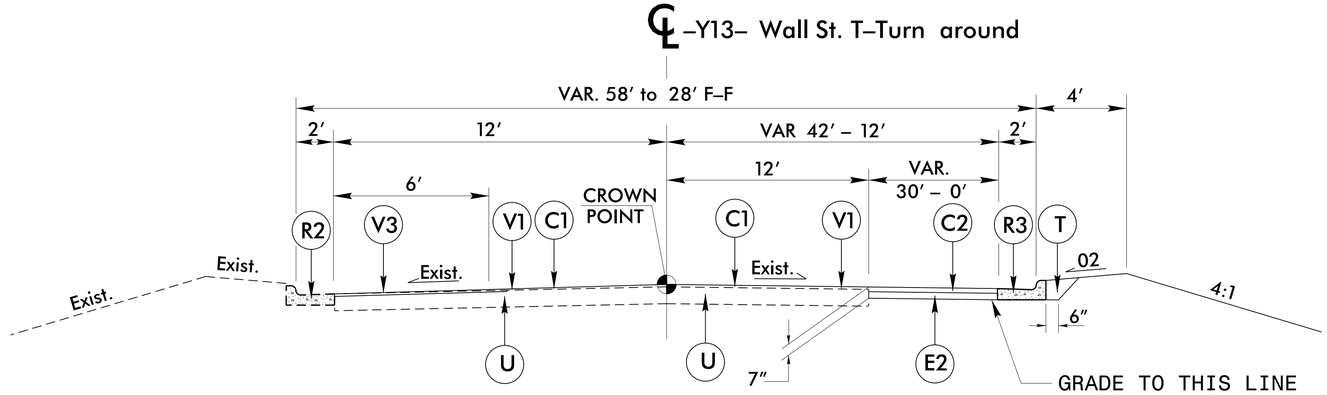

TYPICAL SECTION NO. 26

USE TYPICAL SECTION NO. 26

-Y13- Wall St. T-Turn around Sta. 10+60.00 to 11+22.00

5/14/99
14-MAY-2015 12:30
R:\Roadway\Proj\u3308_rdy_typ.dgn
$$$$USERNAME$$$$

PROJECT REFERENCE NO.	SHEET NO.
U-3308	2A-12
R/W SHEET NO.	
ROADWAY DESIGN ENGINEER	PAVEMENT DESIGN ENGINEER
NORTH CAROLINA PROFESSIONAL SEAL 014571 ENGINEER James A. Speer	NORTH CAROLINA PROFESSIONAL SEAL 031484 ENGINEER VLADIMIR G. MITCHEV
DocuSigned by: James Speer 11/23/2015	DocuSigned by: Vladimir G Mitchev 11/19/2015

C1	1.5" TYPE S9.5B
C2	3" TYPE S9.5B
C3	VARIABLE DEPTH S9.5B
D1	4" TYPE I19.0B
D2	VARIABLE DEPTH TYPE I19.0B
E1	3" TYPE B25.0B
E2	4" TYPE B25.0B
E3	5" TYPE B25.0B
E4	VAR. DEPTH TYPE B25.0B
J	8" AGGREGATE BASE COURSE
K	SUBGRADE STABILIZATION
L	CLASS IV SUBGRADE STABILIZATION
N1	GEOTEXTILE FOR SOIL STABILIZATION
N2	GEOTEXTILE FOR PAVEMENT STABILIZATION
R1	PROP. 1'6" CONC. CURB AND GUTTER
R2	EXIST. 2'6" CONC. CURB AND GUTTER
R3	PROP. 2'6" CONC. CURB AND GUTTER
R4	PROP. CONCRETE ISLAND
S	PROPOSED CONCRETE SIDEWALK
T	EARTH MATERIAL
U	EXISTING PAVEMENT
V1	PROP. 1.5" ASPHALT MILLING
V2	PROP. 3" ASPHALT MILLING
V3	PROP. ASPHALT MILLING VARIABLE
W	ASPHALT WEDGING (SEE DETAIL)

NOTE: ALL SLOPES ARE 1:1 UNLESS OTHERWISE NOTED.

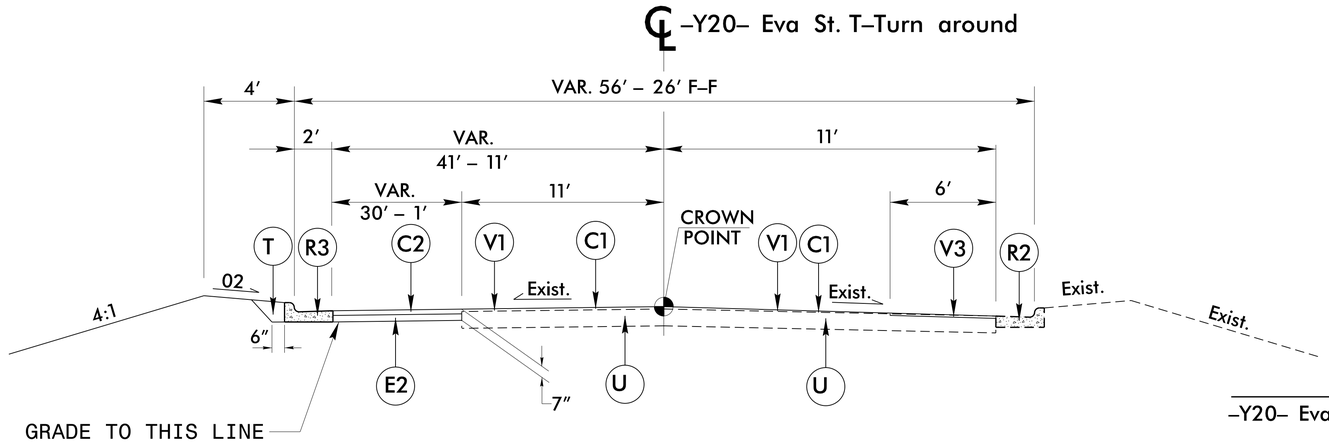

TYPICAL SECTION NO. 27

USE TYPICAL SECTION NO. 27

–Y20– Eva St. T–Turn around To Sta. 10+25.00 To 10+85.00

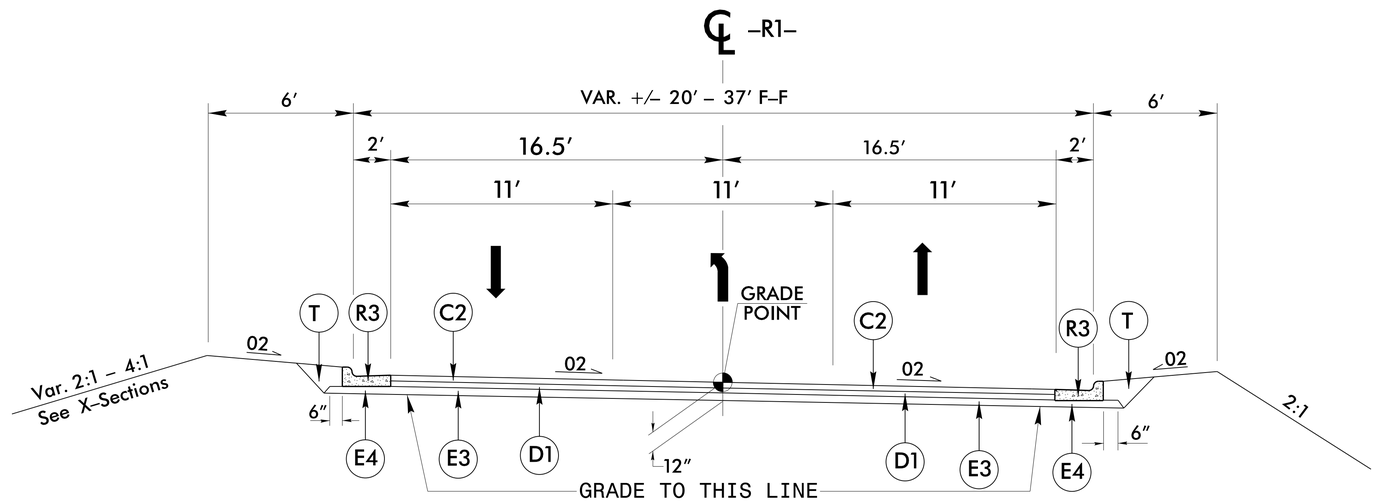

TYPICAL SECTION NO. 28

USE TYPICAL SECTION NO. 28

–R1– Sta. 11+00.00 to 14+80.05

Guardrail Placed @ Face of Curb and Gutter Along –R1– Rt.

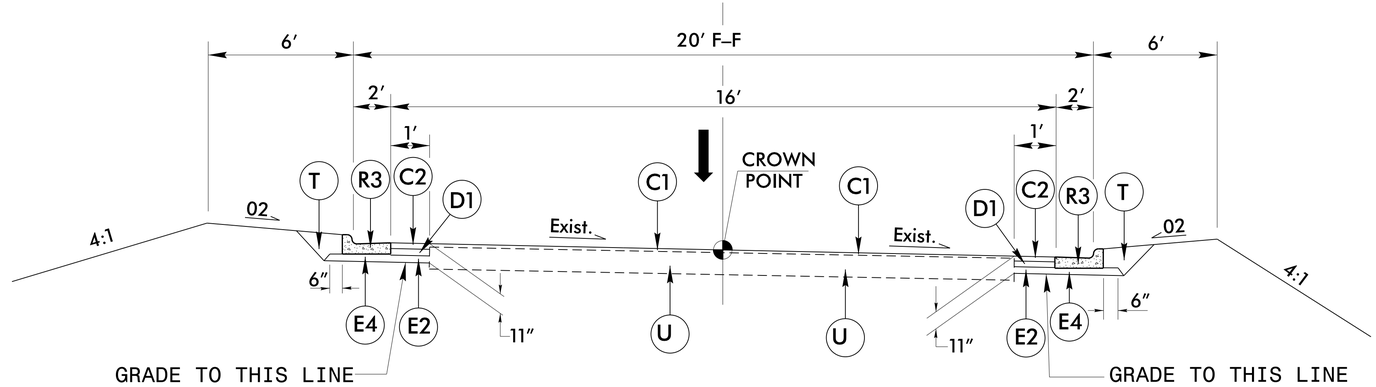

TYPICAL SECTION NO. 29

USE TYPICAL SECTION NO. 29

–R2– Sta. 10+69.54 to 11+00.00

5/14/99

14-MAY-2015 12:30
R:\Roadway\Proj\u3308_rdy_typ.dgn
$$$$USERNAME$$$$

PROJECT REFERENCE NO.	SHEET NO.
U-3308	2A-13
R/W SHEET NO.	

ROADWAY DESIGN ENGINEER
NORTH CAROLINA PROFESSIONAL SEAL 014571 ENGINEER James A. Speer
DocuSigned by: James Speer 11/23/2015
24572CD7D1A5403...

PAVEMENT DESIGN ENGINEER
NORTH CAROLINA PROFESSIONAL SEAL 031484 ENGINEER VLADIMIR G. MITCHEV
DocuSigned by: Vladimir G Mitchev 11/19/2015
A9CBEF463EA947E...

C1	1.5″ TYPE S9.5B
C2	3″ TYPE S9.5B
C3	VARIABLE DEPTH S9.5B
D1	4″ TYPE I19.0B
D2	VARIABLE DEPTH TYPE I19.0B
E1	3″ TYPE B25.0B
E2	4″ TYPE B25.0B
E3	5″ TYPE B25.0B
E4	VAR. DEPTH TYPE B25.0B
J	8″ AGGREGATE BASE COURSE
K	SUBGRADE STABILIZATION
L	CLASS IV SUBGRADE STABILIZATION
N1	GEOTEXTILE FOR SOIL STABILIZATION
N2	GEOTEXTILE FOR PAVEMENT STABILIZATION
R1	PROP. 1′6″ CONC. CURB AND GUTTER
R2	EXIST. 2′6″ CONC. CURB AND GUTTER
R3	PROP. 2′6″ CONC. CURB AND GUTTER
R4	PROP. CONCRETE ISLAND
S	PROPOSED CONCRETE SIDEWALK
T	EARTH MATERIAL
U	EXISTING PAVEMENT
V1	PROP. 1.5″ ASPHALT MILLING
V2	PROP. 3″ ASPHALT MILLING
V3	PROP. ASPHALT MILLING VARIABLE
W	ASPHALT WEDGING (SEE DETAIL)

NOTE: ALL SLOPES ARE 1:1 UNLESS OTHERWISE NOTED.

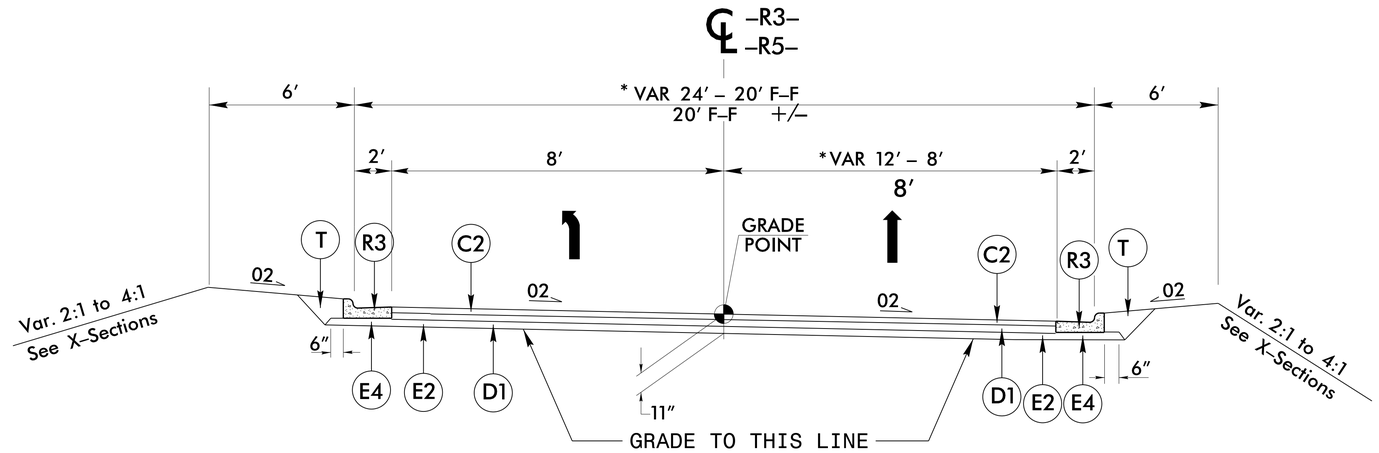

TYPICAL SECTION NO. 30

USE TYPICAL SECTION NO. 30

*–R3– Sta. 10 + 85.34 to 11 + 50.00
(SEE PLANS FOR TAPER)

–R5– Sta. 10 + 91.69 to 11 + 50.00

Guardrail Placed @ Face of Curb and Gutter Along –R3– Lt. & Rt.

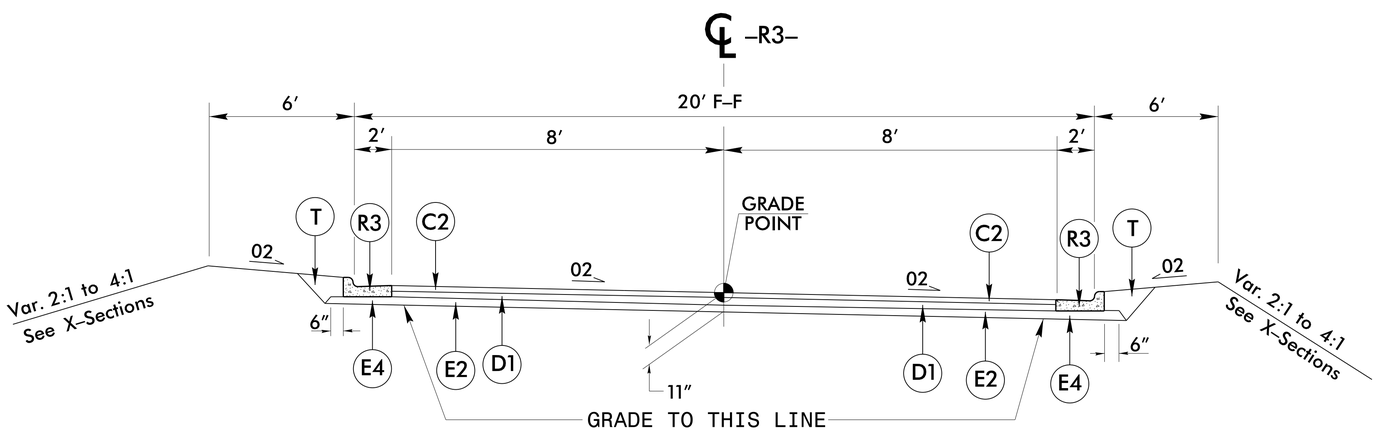

TYPICAL SECTION NO. 31

USE TYPICAL SECTION NO. 31

–R3– Sta. 11 + 50.00 to 13 + 60.00

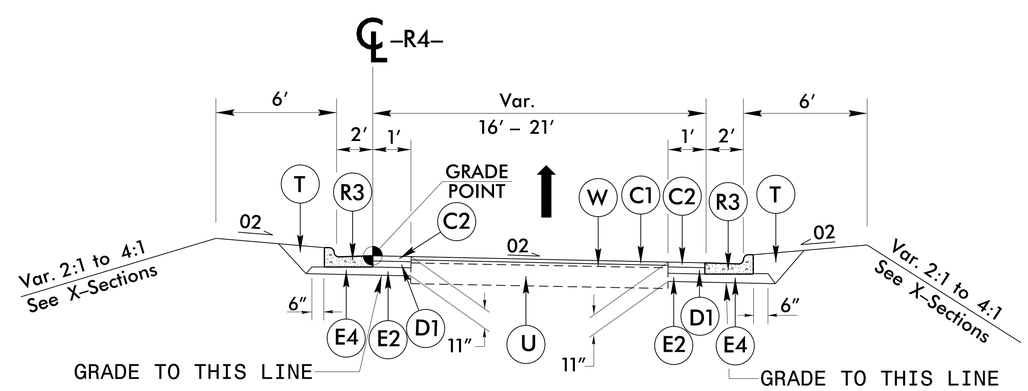

TYPICAL SECTION NO. 32

USE TYPICAL SECTION NO. 32

–R4– Sta. 11 + 38.00 to 12 + 30.00

5/14/99

14-MAY-2015 12:30
R:\Roadway\Proj\u3308_rdy_typ.dgn
$$$$USERNAME$$$$

PROJECT REFERENCE NO.	SHEET NO.
U-3308	2A-14
R/W SHEET NO.	

ROADWAY DESIGN ENGINEER
NORTH CAROLINA PROFESSIONAL SEAL 014571 ENGINEER James A. Speer
DocuSigned by: James Speer 11/23/2015
24512CD7D1A9A03...

PAVEMENT DESIGN ENGINEER
NORTH CAROLINA PROFESSIONAL SEAL 031484 ENGINEER VLADIMIR G. MITCHEV
DocuSigned by: Vladimir G Mitchev 11/19/2015
A9C9EF4A3EA94FE...

5/14/99

C1	1.5" TYPE S9.5B
C2	3" TYPE S9.5B
C3	VARIABLE DEPTH S9.5B
D1	4" TYPE I19.0B
D2	VARIABLE DEPTH TYPE I19.0B
E1	3" TYPE B25.0B
E2	4" TYPE B25.0B
E3	5" TYPE B25.0B
E4	VAR. DEPTH TYPE B25.0B
J	8" AGGREGATE BASE COURSE
K	SUBGRADE STABILIZATION
L	CLASS IV SUBGRADE STABILIZATION
N1	GEOTEXTILE FOR SOIL STABILIZATION
N2	GEOTEXTILE FOR PAVEMENT STABILIZATION
R1	PROP. 1'6" CONC. CURB AND GUTTER
R2	EXIST. 2'6" CONC. CURB AND GUTTER
R3	PROP. 2'6" CONC. CURB AND GUTTER
R4	PROP. CONCRETE ISLAND
S	PROPOSED CONCRETE SIDEWALK
T	EARTH MATERIAL
U	EXISTING PAVEMENT
V1	PROP. 1.5" ASPHALT MILLING
V2	PROP. 3" ASPHALT MILLING
V3	PROP. ASPHALT MILLING VARIABLE
W	ASPHALT WEDGING (SEE DETAIL)

NOTE: ALL SLOPES ARE 1:1 UNLESS OTHERWISE NOTED.

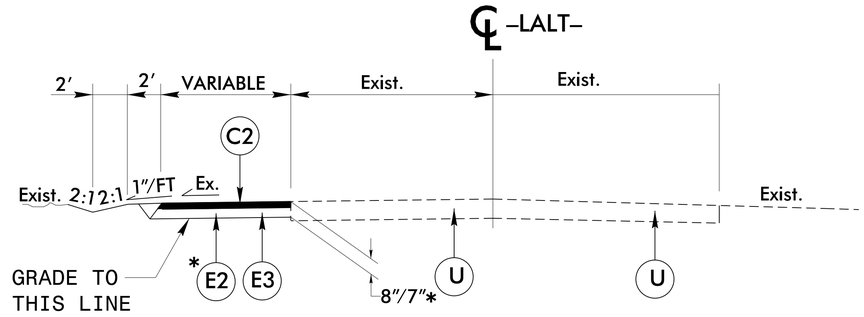

TYPICAL SECTION NO. 33

USE TYPICAL SECTION 33 FOR TEMPORARY PAVEMENT (WIDENING TO THE OUTSIDE OF EXISTING)

–LALT– Sta. 14+58.00 to 15+35.00 LT. (TMP – 5 & 5A)
–LALT– Sta. 17+63.00 to 18+41.00 LT (TMP – 5)
–LALT– Sta. 36+71.00 to 40+62.00 RT (TMP – 6+7)
–LALT– Sta. 39+25.00 to 40+56.00 LT (TMP – 10+11)
–LALT– Sta. 47+36.00 to 48+74.00 LT (TMP – 7)
–LALT– Sta. 49+16.00 to 63+60.00 LT (TMP – 7+8)
–LALT– Sta. 63+90.00 to 66+10.00 LT (TMP – 8)
*–Y15– Sta. 10+05.00 to 10+75.00 LT (TMP – 13)

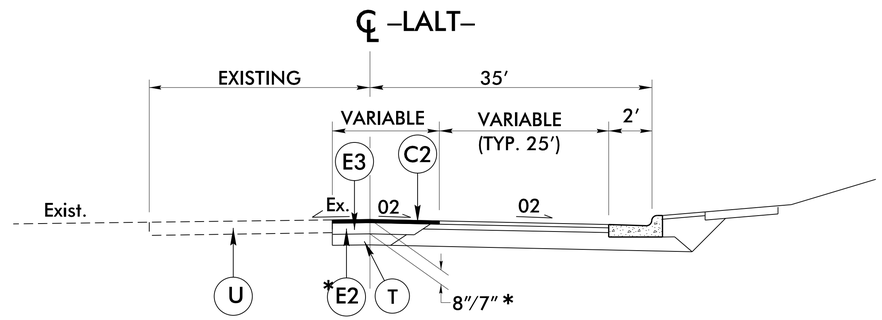

TYPICAL SECTION NO. 34

USE TYPICAL SECTION 34 FOR TEMPORARY PAVEMENT (CONNECTION FROM EXISTING TO PROP. PAVEMENT)

–LALT– Sta. 19+98.00 to 20+94.00 (TMP – 5)
–LALT– Sta. 31+00.00 to 32+00.00 (TMP – 6)
–LALT– Sta. 38+66.00 to 41+25.00 (TMP – 16 & 17)
–LALT– Sta. 42+55.00 to 42+73.00 (TMP – 11)
–LALT– Sta. 42+97.00 to 43+20.00 (TMP – 11)
–LALT– Sta. 44+30.00 to 44+48.00 (TMP – 11)
–LALT– Sta. 44+78.00 to 46+30.00 (TMP – 11)
–LALT– Sta. 48+25.00 to 49+50.00 (TMP – 13)
–LALT– Sta. 53+70.00 to 54+70.00 (TMP – 12)
–LALT– Sta. 56+70.00 to 57+75.00 (TMP – 12)
–LALT– Sta. 59+12.00 to 60+25.00 (TMP – 12)

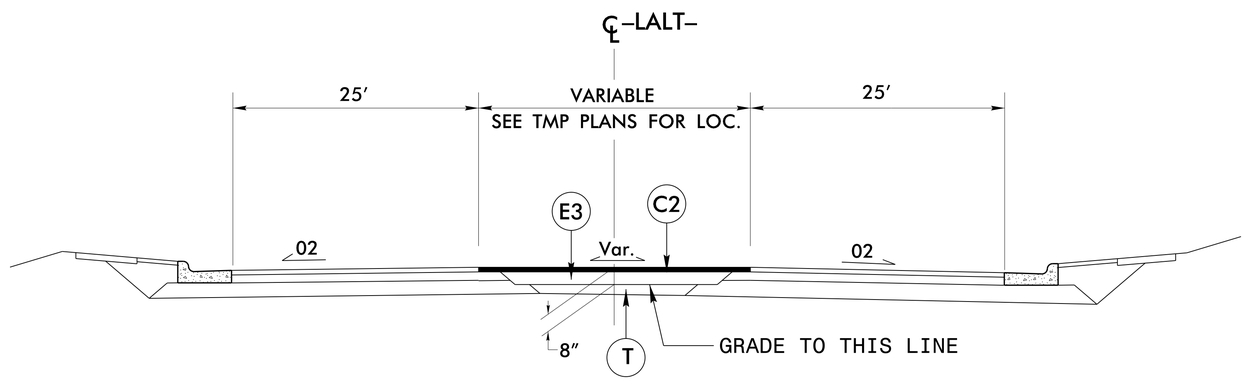

TYPICAL SECTION NO. 35

USE TYPICAL SECTION 35 FOR TEMPORARY PAVEMENT (INSIDE THE PROPOSED MEDIAN)

–LALT– Sta. 28+60.00 to 29+76.00 (TMP – 6)
–LALT– Sta. 40+20.00 to 41+25.00 (TMP – 21)
–LALT– Sta. 50+84.00 to 51+75.00 (TMP – 11)
–LALT– Sta. 53+70.00 to 54+70.00 (TMP – 18)

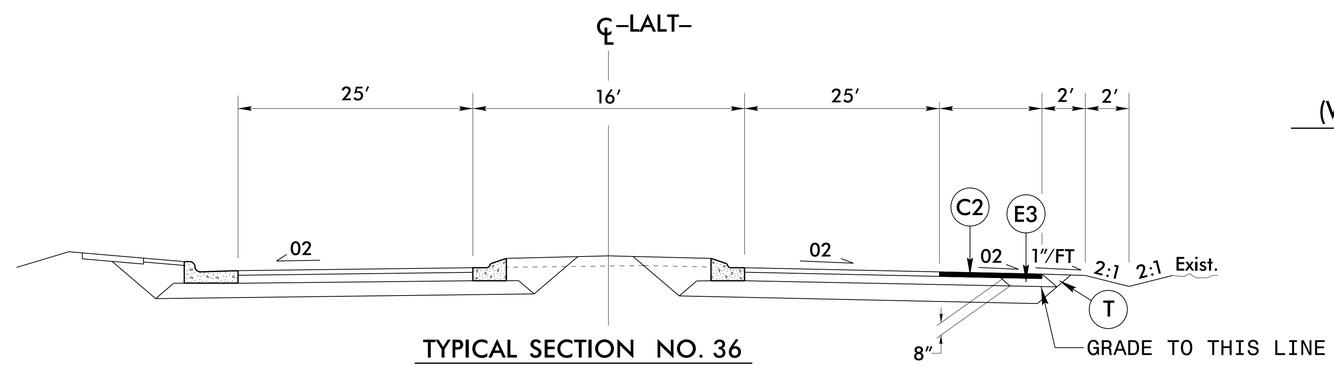

TYPICAL SECTION NO. 36

USE TYPICAL SECTION 36 FOR TEMPORARY PAVEMENT (WIDENING TO THE OUTSIDE OF PROPOSED)

–LALT– Sta. 40+95.00 to 41+50.00 (TMP – 17)
–LALT– Sta. 48+80.00 to 49+30.00 RT (TMP – 13)
–LALT– Sta. 54+30.00 to 54+62.00 RT (TMP – 12)
–LALT– Sta. 57+36.00 to 57+69.00 @ Y18 (TMP – 12)
–LALT– Sta. 63+95.00 to 64+25.00 RT (TMP – 14)
–LALT– Sta. 64+25.00 to 65+10.00 RT (TMP – 12)

18-MAY-2015 08:18
R:\Roadway\Proj\u3308_rdy_typ.dgn
$$$$USERNAME$$$$

DETAIL OF –LALT– AND –R3–/–R4– INTERSECTION & –LALT– AND –Y3–/–R5– INTERSECTION

See Sheets 2C–1 Thru 2C–4 for Curb Ramp Details

See Plan Sheet 4

PROJECT REFERENCE NO.	SHEET NO.
U-3308	2B-1
R/W SHEET NO.	

ROADWAY DESIGN ENGINEER
NORTH CAROLINA PROFESSIONAL SEAL 014571 ENGINEER James A. Speer

DocuSigned by: James Speer 11/23/2015

SCALE 1" = 20'

NAD 83/95

Proposed Approach Slab

Concrete Island or Sidewalk

RETAIN AND UPGRADE EXISTING TRAFFIC SIGNAL

–LALT–
PI Sta 18+92.86
△ = 1° 56' 11.5" (LT)
D = 0° 42' 58.3"
L = 270.39'
T = 135.21'
R = 8,000.00'
SE = NC

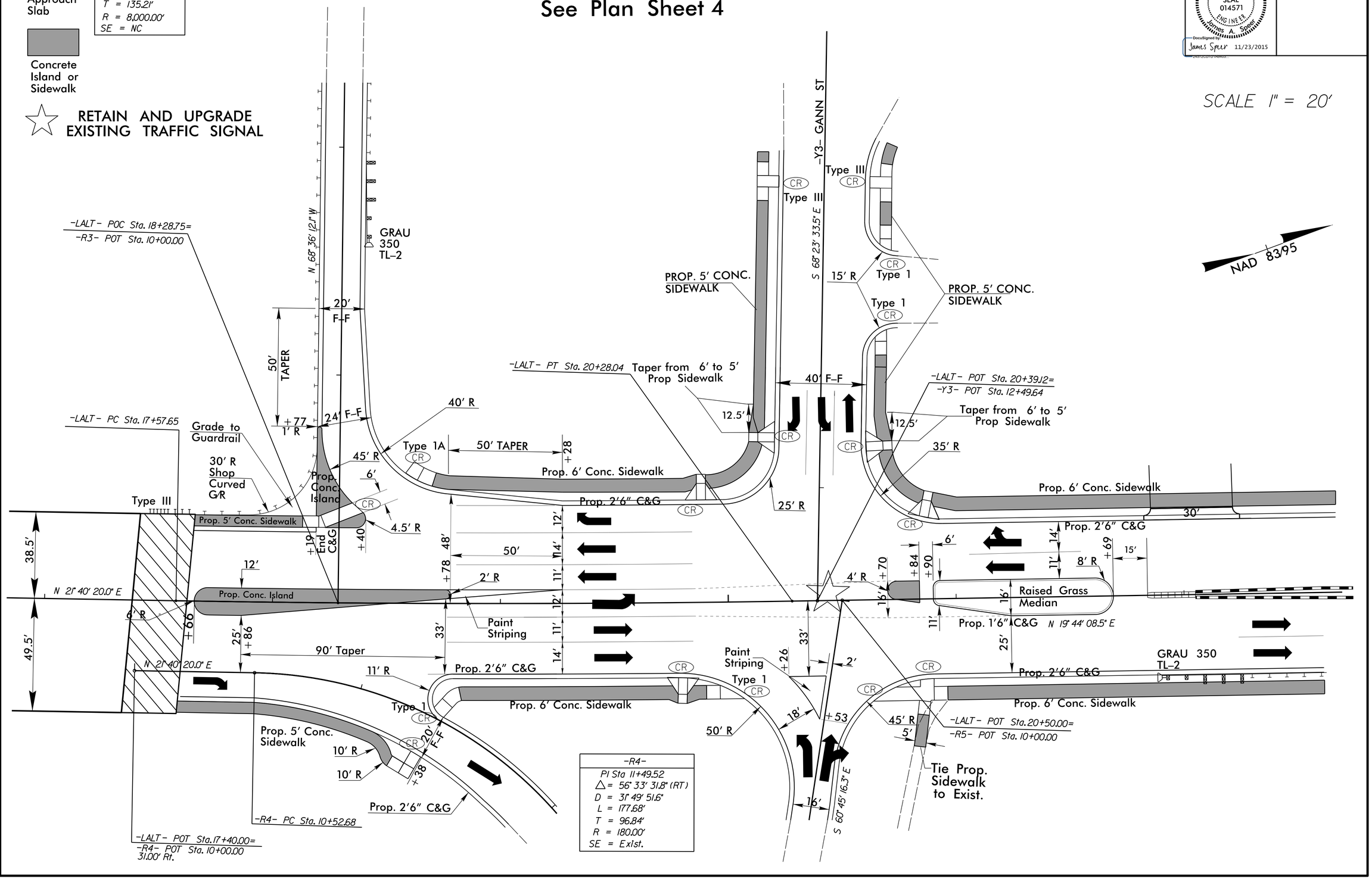

REVISIONS

8/17/99

07-MAY-2015 13:50
r:\roadway\proj\u3308_rdy_dtl_intersection.dgn

PROJECT REFERENCE NO.	SHEET NO.
U-3308	2B-2
R/W SHEET NO.	

ROADWAY DESIGN ENGINEER
NORTH CAROLINA PROFESSIONAL SEAL 014571 ENGINEER James A. Speer
DocuSigned by: James Speer 11/23/2015

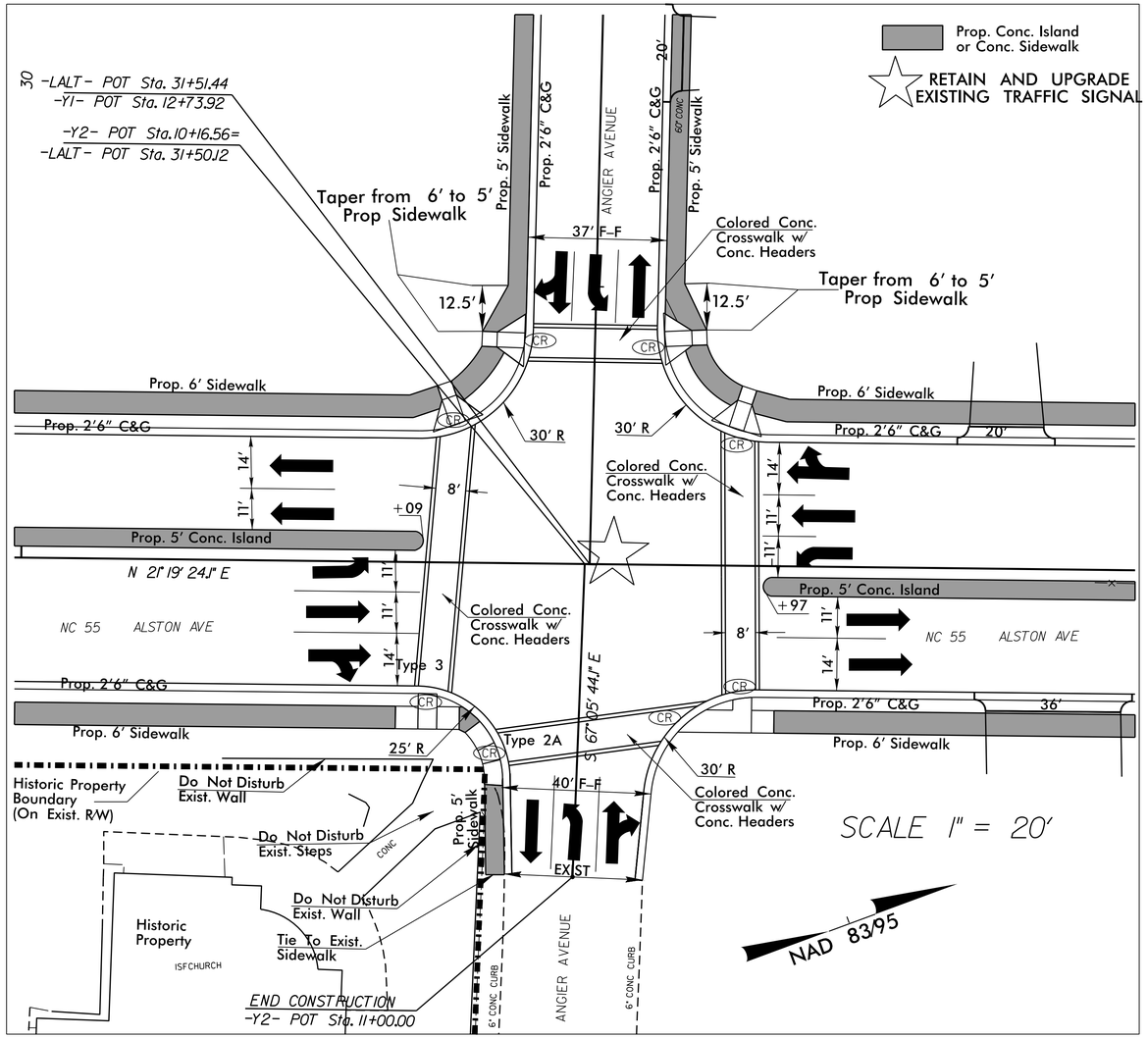

DETAIL OF –LALT– AND –Y1–/–Y2– INTERSECTION

See Sheets 2C–1 Thru 2C–4 for Curb Ramp Details
See Sheet 2C–14 for Brick Paver Detail
See Sheet 2C–14 for Crosswalk Detail

See Plan Sheet 6

DETAIL OF –LALT– AND –Y4–/–Y5– INTERSECTION

See Sheets 2C–1 Thru 2C–4 for Curb Ramp Details
See Sheet 2C–14 for Brick Paver Detail
See Sheet 2C–14 for Crosswalk Detail

See Plan Sheet 7

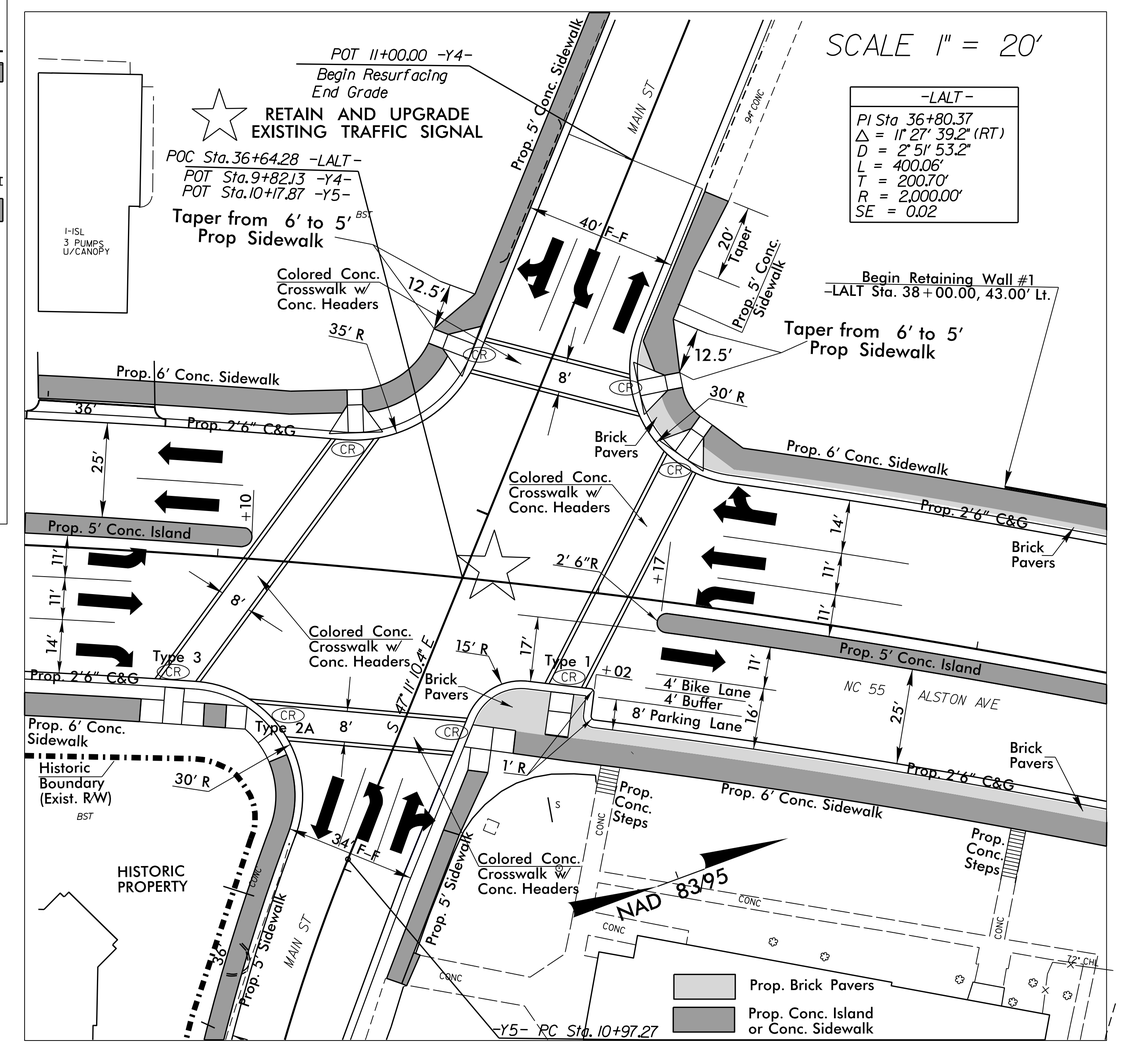

REVISIONS

8/17/99

07-MAY-2015 13:46
R:\Roadway\Proj\U-3308_Rdy_dtl_Intersection.dgn
$$USERNAME$$

PROJECT REFERENCE NO.	SHEET NO.
U-3308	2B-3
R/W SHEET NO.	

ROADWAY DESIGN ENGINEER
NORTH CAROLINA PROFESSIONAL SEAL 014571 ENGINEER James A. Speer
DocuSigned by: James Speer 11/23/2015

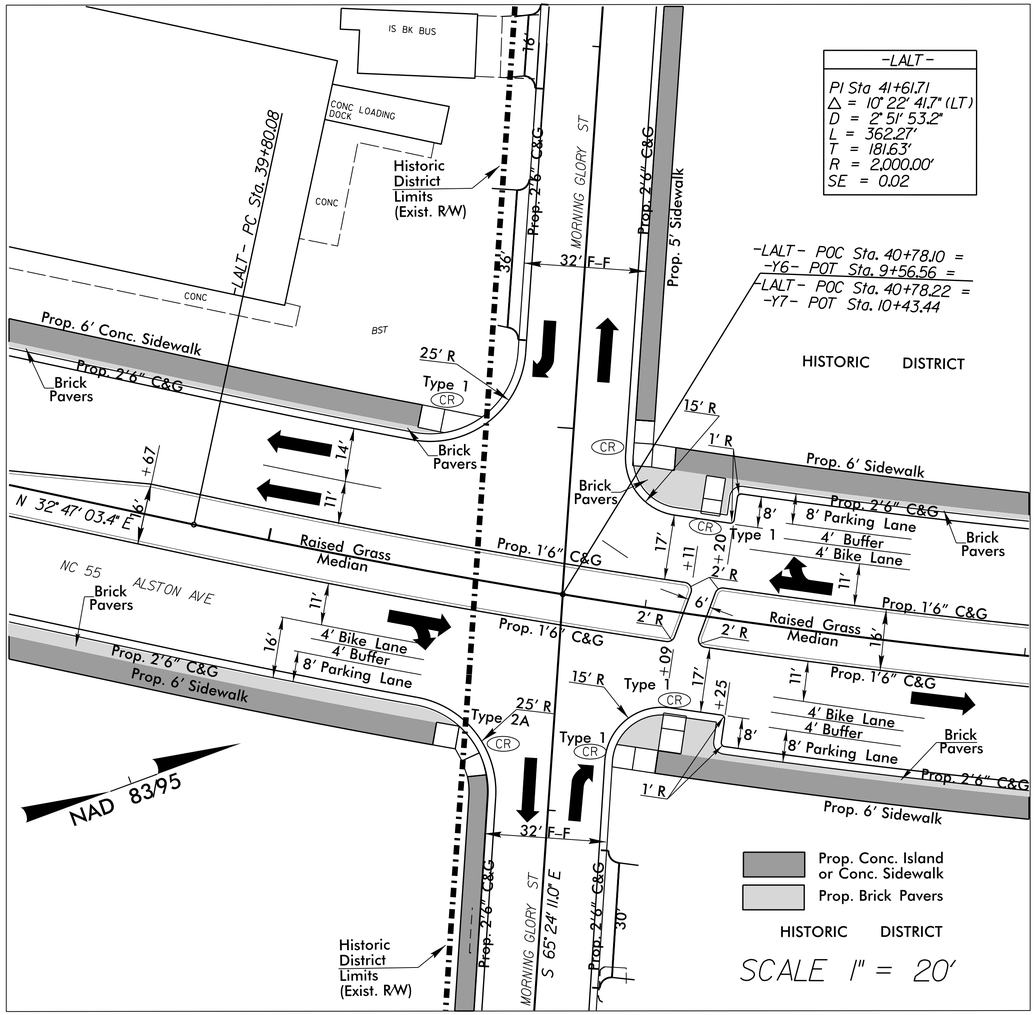

DETAIL OF –LALT– AND –Y6–/–Y7– INTERSECTION

See Plan Sheet 8

See Sheets 2C–1 Thru 2C–4 for Curb Ramp Details

See Sheet 2C–14 for Brick Paver Detail

See Sheets 2C–1 Thru 2C–4 for Curb Ramp Details

See Sheet 2C–14 for Brick Paver Detail

See Plan Sheet 10

DETAIL OF –LALT– AND –Y14–/–Y15– INTERSECTION

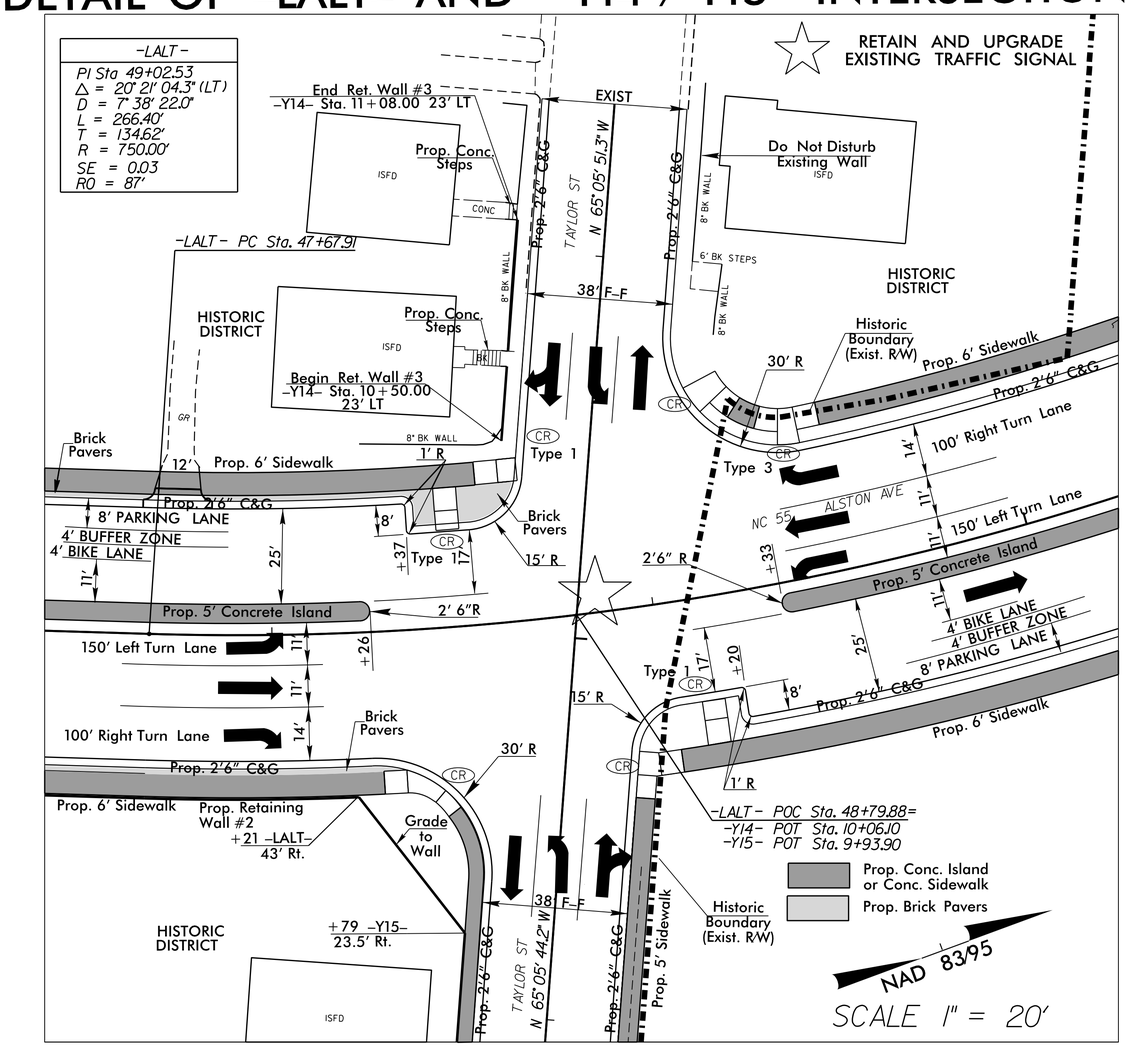

REVISIONS

8/17/99

07-MAY-2015 13:46
R:\Roadway\Proj\U-3308_Rdy_dtl_intersection.dgn
$$USERNAME$$

PROJECT REFERENCE NO.	SHEET NO.
U-3308	2B-4
R/W SHEET NO.	

ROADWAY DESIGN ENGINEER
NORTH CAROLINA PROFESSIONAL SEAL 014571 ENGINEER James A. Speer

DocuSigned by: James Speer 11/23/2015

-Y18-
PI Sta 14+09.52
Δ = 7° 10' 05.7" (LT)
D = 1° 25' 56.6"
L = 500.44'
T = 250.55'
R = 4,000.00'
SE = NC

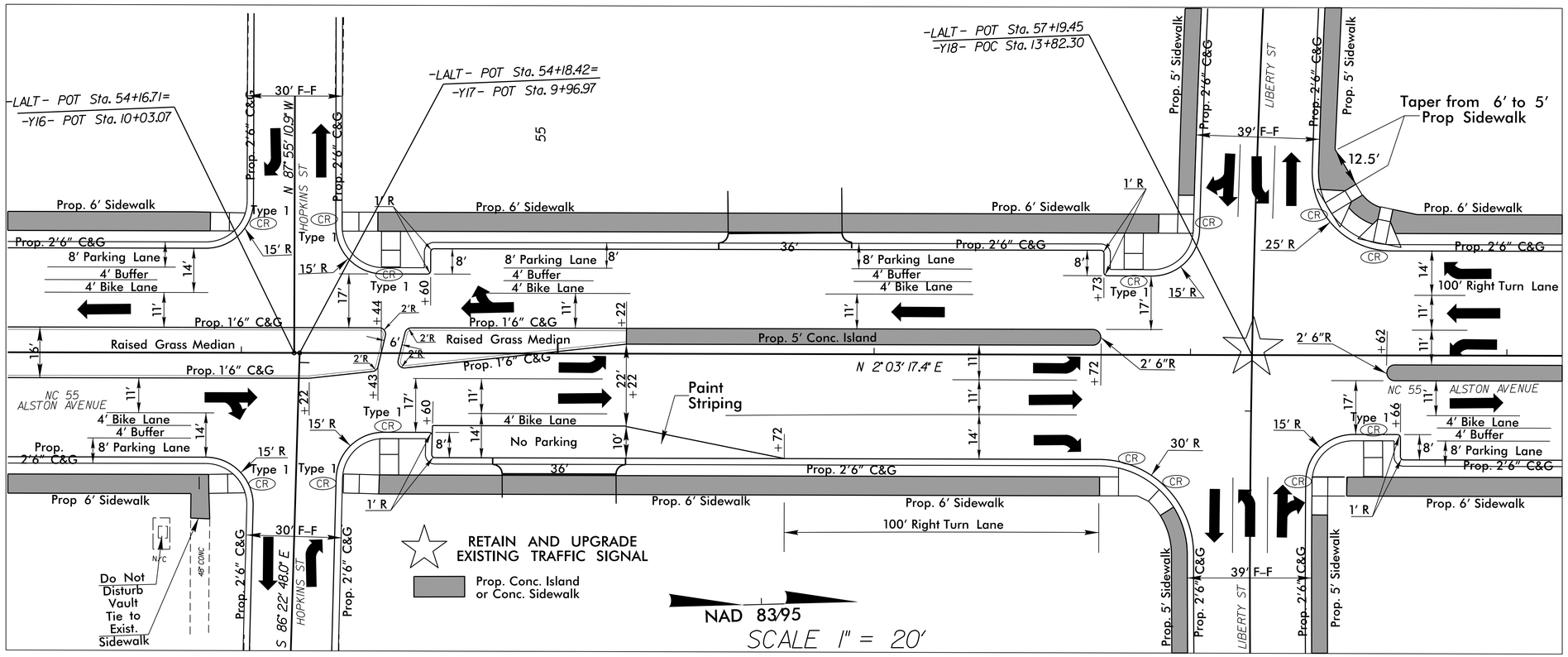

See Sheets 2C-1 Thru 2C-4 for Curb Ramp Details

See Plan Sheet 11

DETAIL OF -LALT- AND -Y16-/-Y17- INTERSECTION
&
DETAIL OF -LALT- AND -Y18- INTERSECTION

REVISIONS

8/17/99

07-MAY-2015 13:46
R:\Roadway\Proj\U-3308_Rdy_dtl_intersection.dgn
$$USERNAME$$

PROJECT REFERENCE NO.	SHEET NO.
U-3308	2B-5
R/W SHEET NO.	

ROADWAY DESIGN ENGINEER
NORTH CAROLINA PROFESSIONAL SEAL 014571 ENGINEER James A. Spear
DocuSigned by: James Spear 11/23/2015

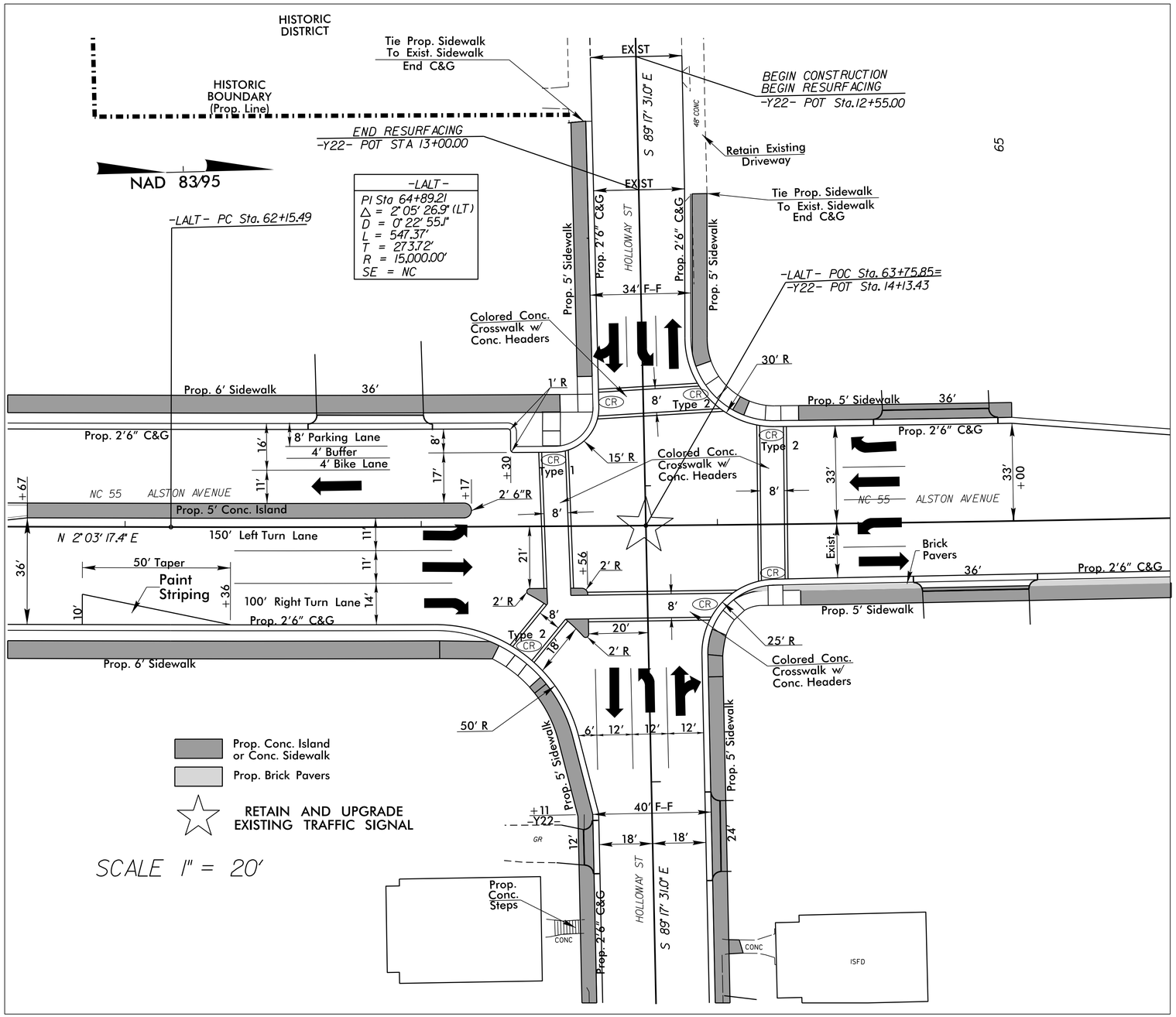

DETAIL OF –LALT– AND –Y22– INTERSECTION

See Sheets 2C–1 Thru 2C–4 for Curb Ramp Details
See Sheet 2C–14 for Crosswalk Detail
See Sheet 2C–14 for Brick Paver Detail
See Plan Sheet 12

REVISIONS

8/17/99

07-MAY-2015 13:46
R:\Roadway\Proj\U-3308_Rdy_dtl_Intersection.dgn
$$USERNAME$$

PROJECT REFERENCE NO.	SHEET NO.
U-3308	2B-6
R/W SHEET NO.	

ROADWAY DESIGN ENGINEER
NORTH CAROLINA PROFESSIONAL SEAL 014571 ENGINEER James A. Speer

DocuSigned by: James Speer 11/23/2015
24572CD7D7A6403...

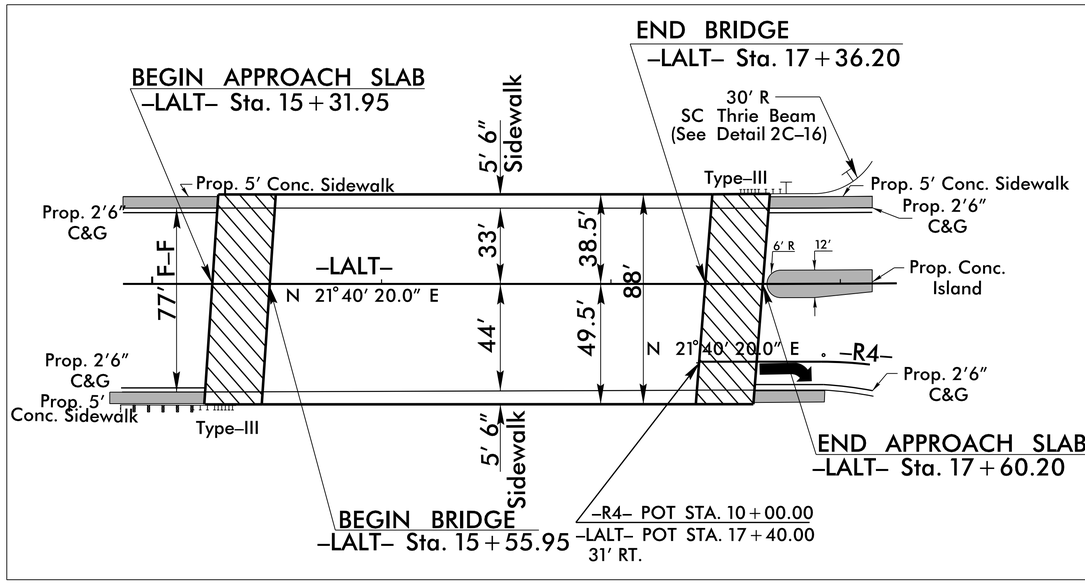

DETAIL SHOWING PAVEMENT-BRIDGE RELATIONSHIP FOR STRUCTURE ON -LALT- NC 55 (ALSTON AVE) OVER -YA- (NC 147/ I.L. "Buck" Dean Freeway)
NOT TO SCALE

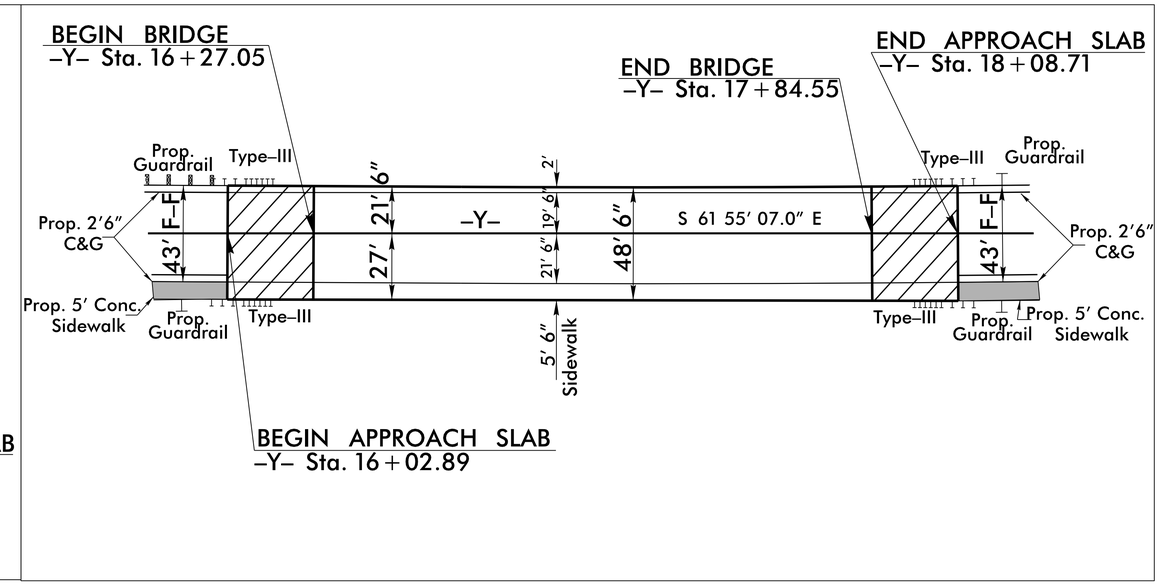

DETAIL SHOWING PAVEMENT-BRIDGE RELATIONSHIP FOR STRUCTURE ON -Y- (PETTIGREW ST.) OVER -LALT- (ALSTON AVE.)
NOT TO SCALE

NOTE: PROPOSED -Y- (PETTIGREW STREET) BRIDGE WILL BE CONSTRUCTED USING AN OFFSITE DETOUR TO MAINTAIN TRAFFIC DURING CONSTRUCTION

5/14/99
11-MAY-2015 10:59
$$$$USERNAME$$$$

PROJECT REFERENCE NO.	SHEET NO.
U-3308	2B-7
R/W SHEET NO.	

ROADWAY DESIGN ENGINEER

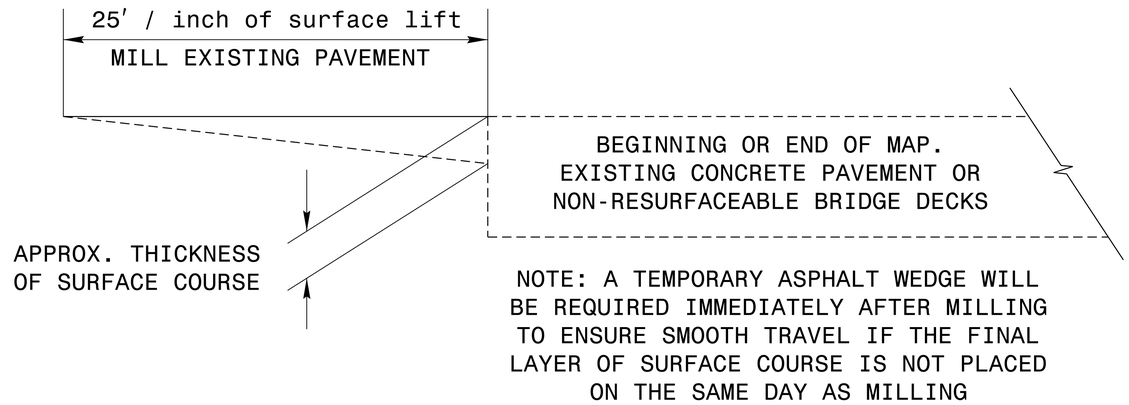

DETAIL OF INCIDENTAL MILLING

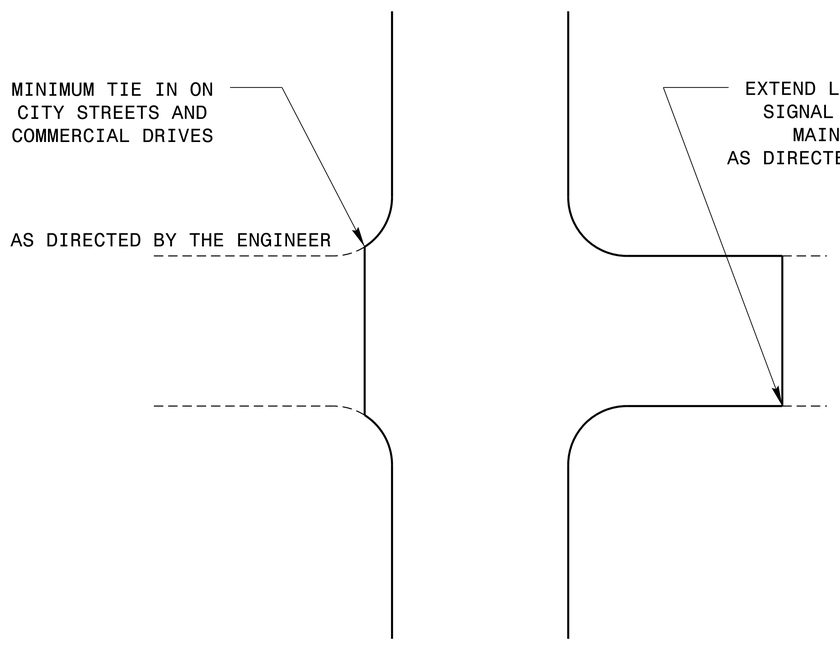

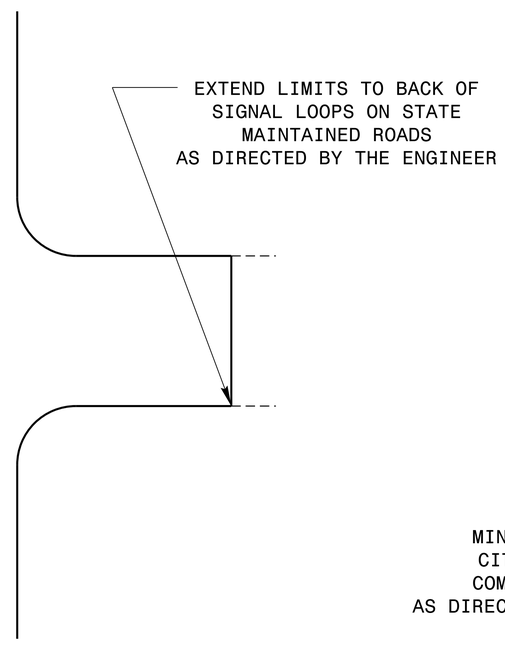

DETAIL OF PROJECT LIMITS AT UNSIGNALIZED Y LINES

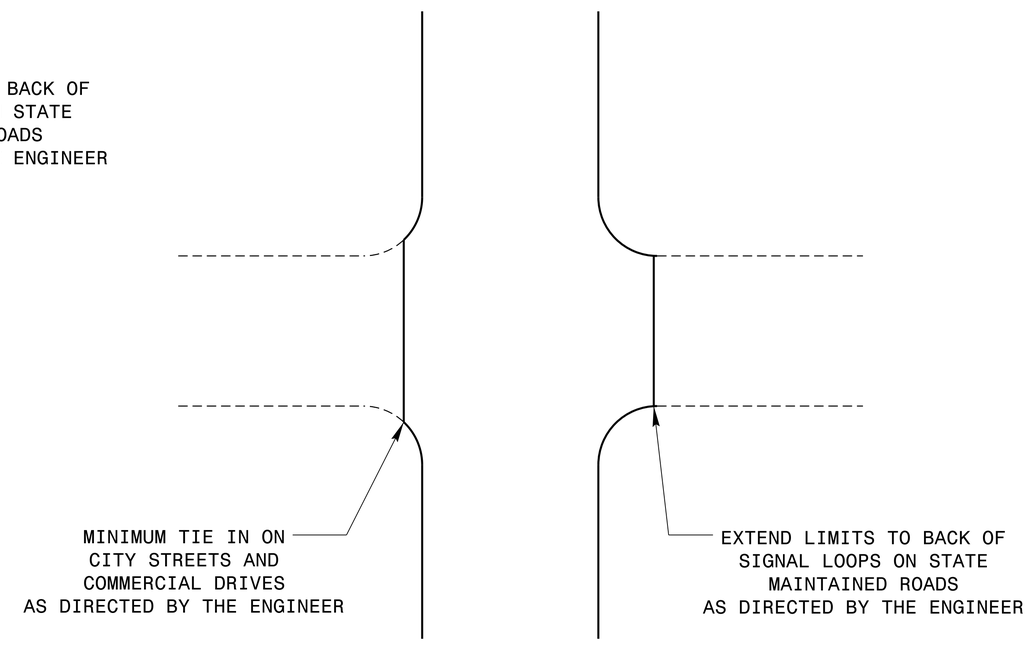

DETAIL OF PROJECT LIMITS AT UNSIGNALIZED Y LINES

5/14/99

PROJECT REFERENCE NO.	SHEET NO.
U-3308	2C-1

PAY LIMITS FOR 1 CURB RAMP

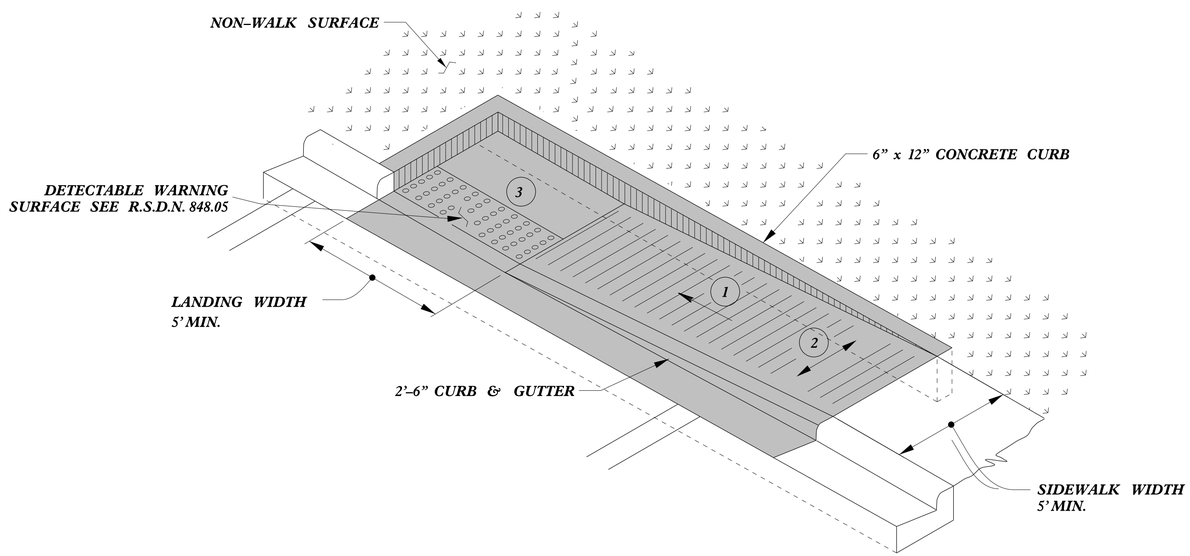

TYPE 1A

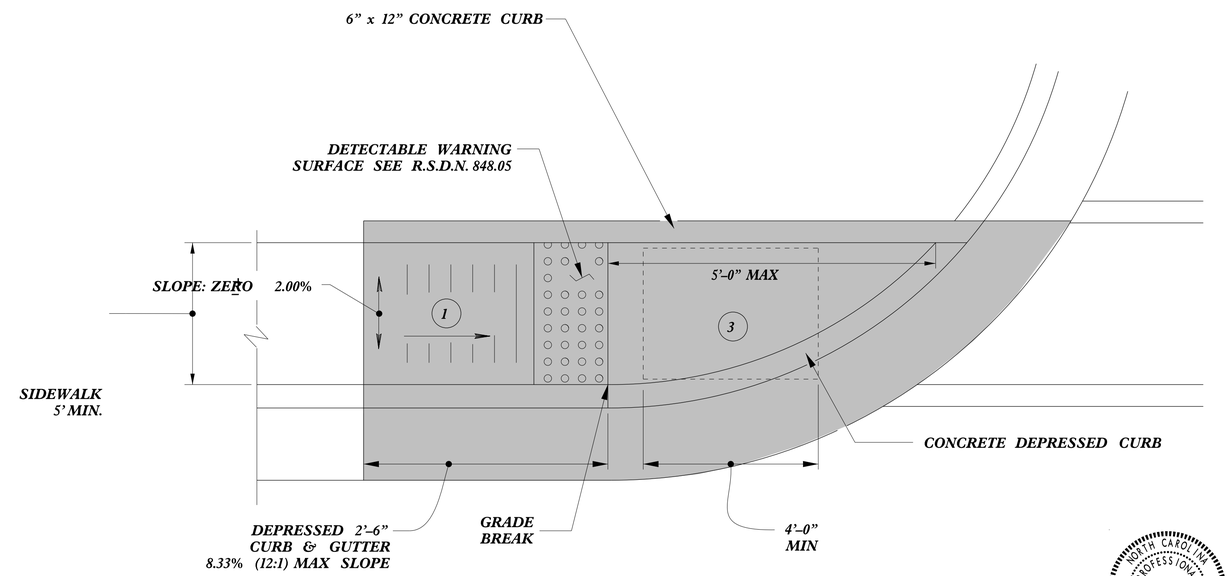

TYPE 1

1. 8.33% (12:1) MAX RAMP SLOPE
2. CROSS SLOPE: 2.00%
3. CURB RAMPS REQUIRE A (4'-0") MINIMUM LANDING WITH A MAXIMUM CROSS SLOPE AND LONGITUDINAL SLOPE OF 2.00% WHERE PEDESTRIANS PERFORM TURNING MANEUVERS. SLOPE TO DRAIN TO CURB.

REFER TO ROADWAY STANDARD DRAWING NUMBER 848.05 SHEET 3 OF 3 FOR ALL RAMP NOTES

NORTH CAROLINA PROFESSIONAL SEAL 022966 ENGINEER Joel S. Howerton

DocuSigned by: Joel Howerton 873F3D17DCDC45F...

11/16/2015

CONTRACT STANDARDS AND DEVELOPMENT UNIT
Office 919-707-6950 FAX 919-250-4119

CURB RAMPS

Directional Ramps

ORIGINAL BY: J.S. HOWERTON DATE: 7/7/11
MODIFIED BY: DATE:
CHECKED BY: DATE:
FILE SPEC.: stds/2012CurbRamp/CurbRampDetails.dgn

$$$$SYSTEM$$$$
$$$$SWEN$$$$
$$$$SIGN$$$$
$$$$SERAME$$$$
$$$$DERAME$$$$

5/14/99

PROJECT REFERENCE NO.	SHEET NO.
U-3308	2C-2

PAY LIMITS FOR 1 CURB RAMP

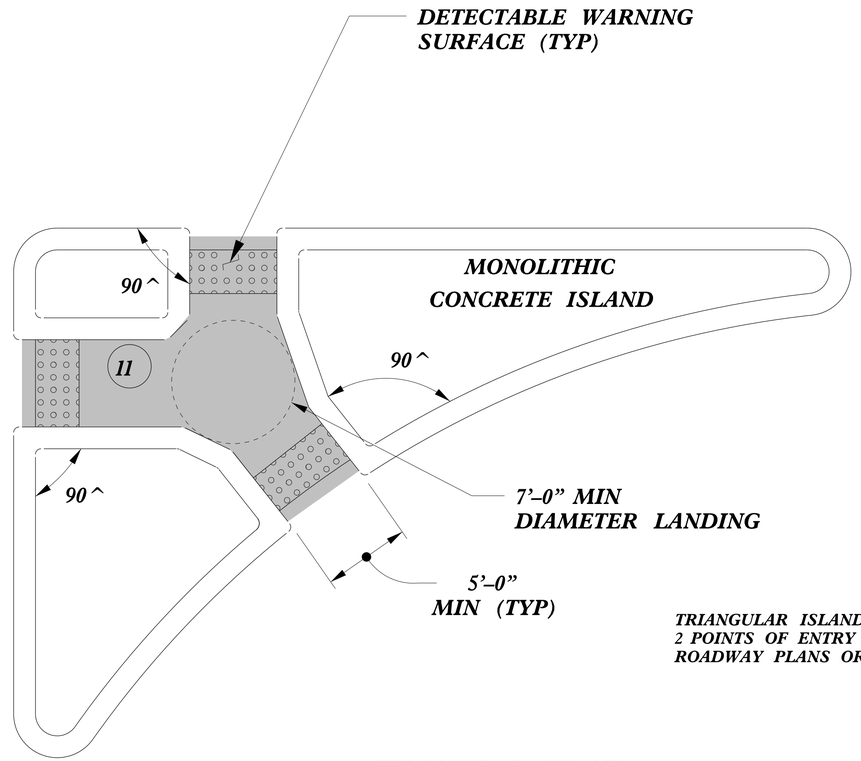

TRIANGULAR ISLANDS MAY BE CONSTRUCTED WITH ONLY 2 POINTS OF ENTRY AND EXIT AS SHOWN IN THE ROADWAY PLANS OR AS DIRECTED BY THE ENGINEER.

TRIANGULAR ISLAND WITH CUT THROUGH

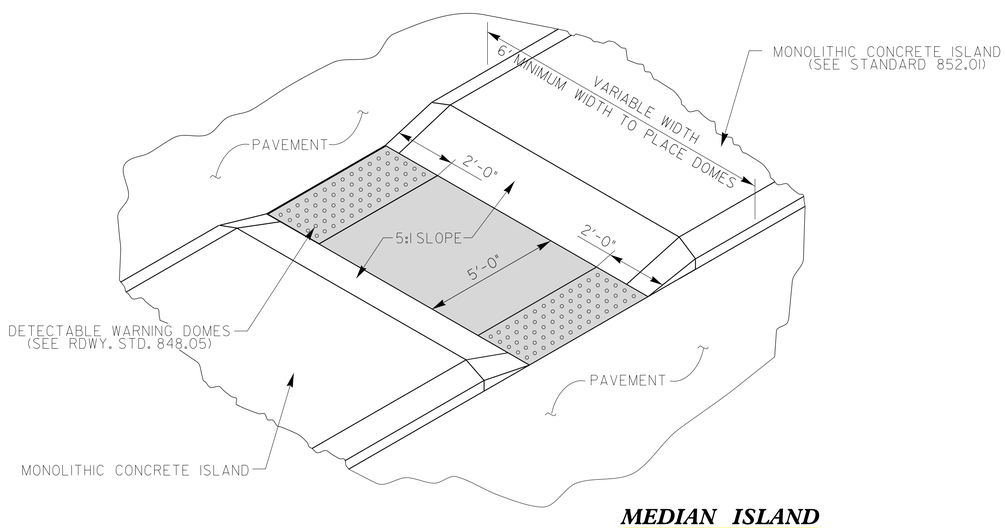

MEDIAN ISLAND WITH CUT THROUGH

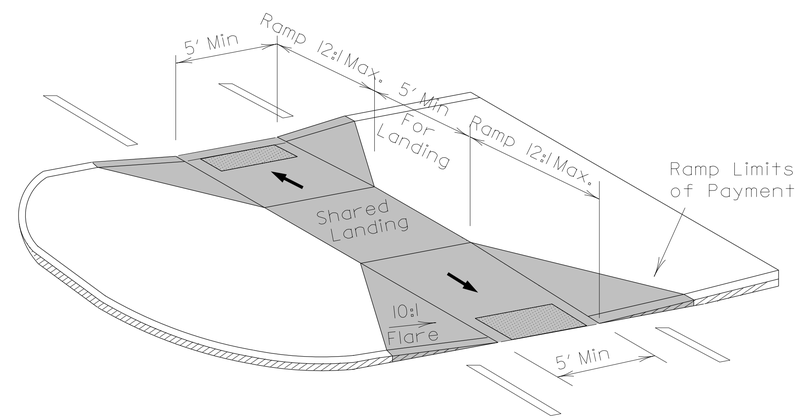

MEDIAN ISLAND CURB RAMPS

NORTH CAROLINA PROFESSIONAL SEAL 022966 ENGINEER Joel S. Howerton

DocuSigned by: Joel Howerton 873F3D17DCDC45F...

11/16/2015

CONTRACT STANDARDS AND DEVELOPMENT UNIT
Office 919-707-6950 FAX 919-250-4119

CURB RAMPS

Median or Turn Lane Islands

ORIGINAL BY: J.S. HOWERTON DATE: 7/7/11
MODIFIED BY: DATE:
CHECKED BY: DATE:
FILE SPEC. :stds/2012CurbRamp/CurbRampDetails.dgn

$$$$SYSTIME$$$$
$$$$SYSTIME$$$$
$$$$USERNAME$$$$

5/14/99

PROJECT REFERENCE NO.	SHEET NO.
U-3308	2C-3

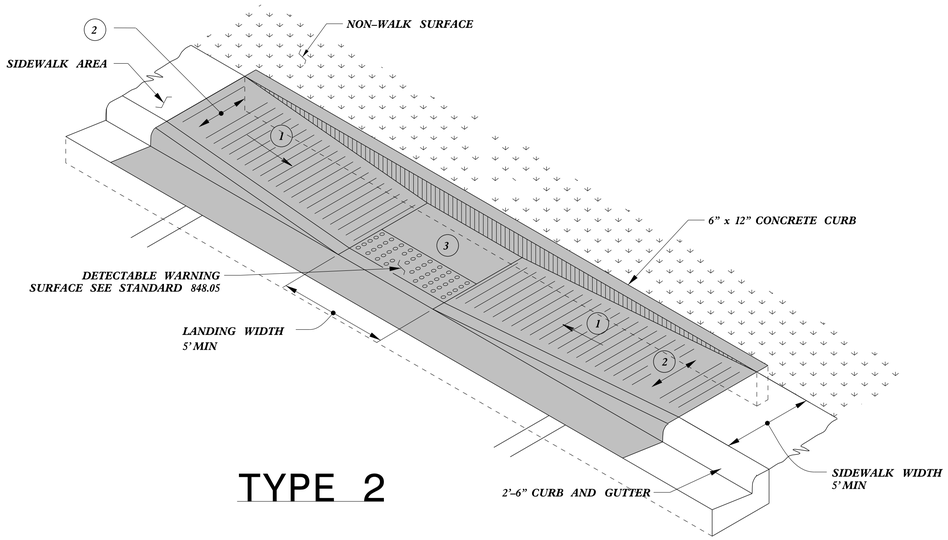

TYPE 2

PAY LIMITS FOR 1 CURB RAMP

1. 8.33% (12:1) MAX RAMP SLOPE
2. CROSS SLOPE: 2.00%
3. CURB RAMPS REQUIRE A (4'-0") MINIMUM LANDING WITH A MAXIMUM CROSS SLOPE AND LONGITUDINAL SLOPE OF 2.00% WHERE PEDESTRIANS PERFORM TURNING MANEUVERS. SLOPE TO DRAIN TO CURB.

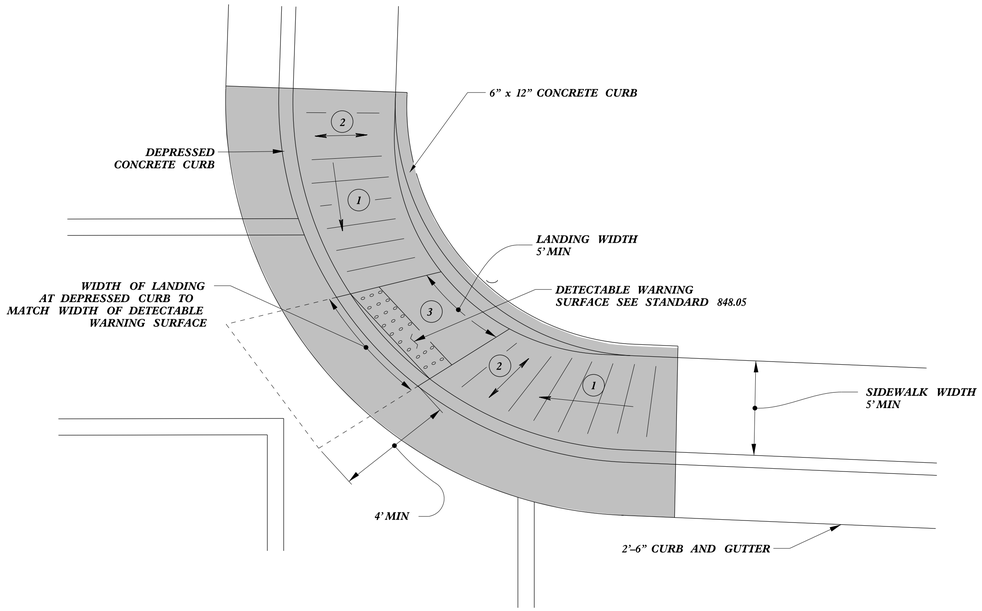

TYPE 2A

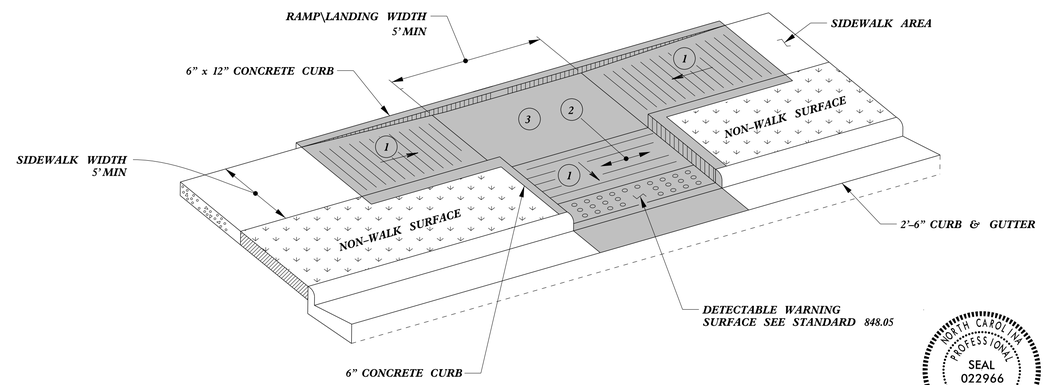

TYPE 3

NORTH CAROLINA PROFESSIONAL SEAL 022966 ENGINEER Joel S. Howerton

DocuSigned by: Joel Howerton 873F3D17DCDC45F...

11/16/2015

REFER TO ROADWAY STANDARD DRAWING NUMBER 848.05 SHEET 3 OF 3 FOR ALL RAMP NOTES

CONTRACT STANDARDS AND DEVELOPMENT UNIT
Office 919-707-6950 FAX 919-250-4119

CURB RAMPS

Parallel Ramps

ORIGINAL BY: J.S. HOWERTON DATE: 7/7/11
MODIFIED BY: DATE:
CHECKED BY: DATE:
FILE SPEC.: stds/2012CurbRamp/CurbRampDetails.dgn

$$$$SYSTEM$$$$
$$$$USERNAME$$$$

PROJECT REFERENCE NO.	SHEET NO.
U-3308	2C-4

5/14/99

PAY LIMITS FOR 1 CURB RAMP

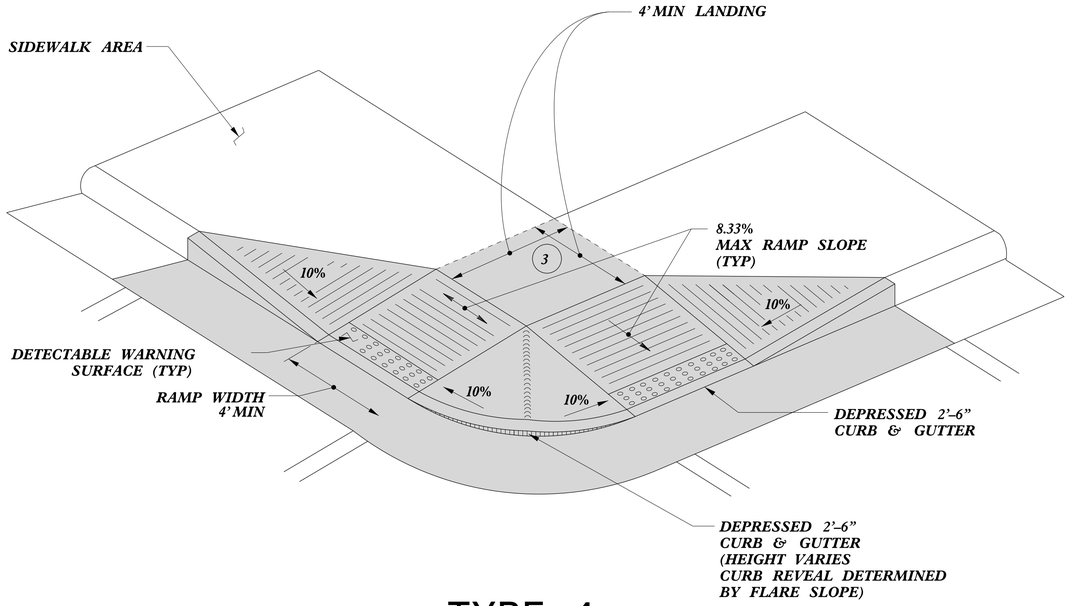

TYPE 4

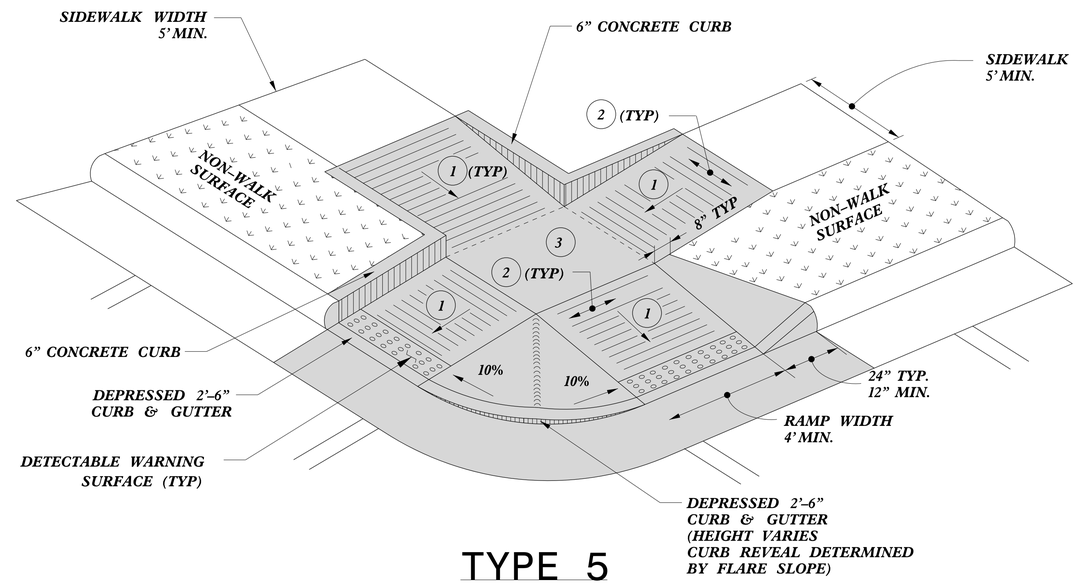

TYPE 5

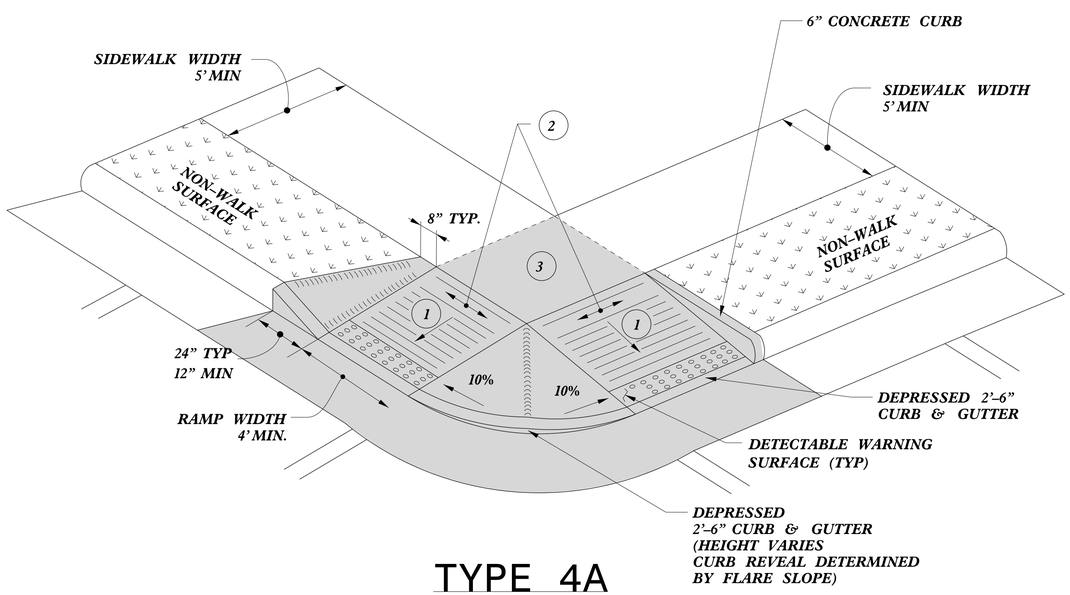

TYPE 4A

1. 8.33% (12:1) MAX RAMP SLOPE
2. CROSS SLOPE: 2.00%
3. CURB RAMPS REQUIRE A (4'-0") MINIMUM LANDING WITH A MAXIMUM CROSS SLOPE AND LONGITUDINAL SLOPE OF 2.00% WHERE PEDESTRIANS PERFORM TURNING MANEUVERS. SLOPE TO DRAIN TO CURB.

REFER TO ROADWAY STANDARD DRAWING NUMBER 848.05 SHEET 3 OF 3 FOR ALL RAMP NOTES

NORTH CAROLINA PROFESSIONAL SEAL 022966 ENGINEER Joel S. Howerton

DocuSigned by: Joel Howerton 873F3D17DCDC45F...

11/16/2015

CONTRACT STANDARDS AND DEVELOPMENT UNIT
Office 919-707-6950 FAX 919-250-4119

CURB RAMPS

Shared Landing

ORIGINAL BY: J.S. HOWERTON DATE: 7/7/11
MODIFIED BY: DATE:
CHECKED BY: DATE:
FILE SPEC. :stds/2012CurbRamp/CurbRampDetails.dgn

$$$$SYTIME$$$$
$$$$SIGN$$$$
$$$$USERNAME$$$$

PROJECT REFERENCE NO.	SHEET NO.
U-3308	2C-5

STATE OF
NORTH CAROLINA
DEPT. OF TRANSPORTATION
DIVISION OF HIGHWAYS
RALEIGH, N.C.

ENGLISH DETAIL DRAWING FOR

CONCRETE STEPS WITH HANDRAIL

SHEET 1 OF 1

844D01

GENERAL NOTES :

1- CONSTRUCT PROPOSED STEEL PIPE RAIL OF 1½″ DIAMETER SCHEDULE 40 PLAIN END GALVANIZED STEEL PIPE MEETING THE REQUIREMENTS OF ASTM A53. EMBED PIPE RAIL 8″ INTO PROPOSED STEPS WITH CHEMICAL OR CONCRETE GROUT ANCHORING SYSTEM AS DIRECTED BY THE ENGINEER.
2- USE A ROTARY DRILL FOR DRILLING THE HOLES FOR THE PIPE RAIL. NO IMPACT DRILLS ALLOWED.
3- USE CLASS ″B″ CONCRETE THROUGHOUT FOR CONCRETE STEPS.
4- LOCATION AND QUANTIES SHOWN ARE APPROXIMATE ONLY. EXACT LOCATION AND QUANTIES WILL BE DETERMINED BY THE ENGINEER.
5- ALL WORK AS DIRECTED BY THE ENGINEER.
6- REPAIR OF GALVANIZING IN ACCORDANCE WITH SCT.1076 OF THE STANDARD SPECIFICATIONS.
7- WELD IN ACCORDANCE WITH ARTICLE 1072-20 OF THE STANDARD SPECIFICATIONS.
8- 2″ CLEAR SPACING ON ALL REINFORCING BARS.
9- EXTEND HORIZONTAL REINFORCING BARS UPWARD INTO SIDE WALLS.
10- ALL HANDRAILS AND STEPS MUST COMPLY WITH ADA STANDARDS FOR ACCESSIBLE DESIGN.

CUBIC YARDS IN STANDARD CONCRETE STEPS

NO. OF STEPS	4′ WIDE	5′ WIDE	6′ WIDE	7′ WIDE	ADDITIONAL CU. YDS. PER 1′ WIDTH
2	0.4	0.5	0.5	0.6	0.1
3	0.6	0.7	0.8	0.9	0.1
4	0.8	0.9	1.0	1.2	0.1
5	1.0	1.2	1.3	1.4	0.1
6	1.2	1.4	1.5	1.7	0.2
7	1.4	1.6	1.8	2.0	0.2
8	1.6	1.8	2.0	2.3	0.2
9	1.8	2.0	2.3	2.6	0.3
10	2.0	2.3	2.5	2.8	0.3
ADDITIONAL STEP INCREMENT	0.2	0.2	0.2	0.3	0.1

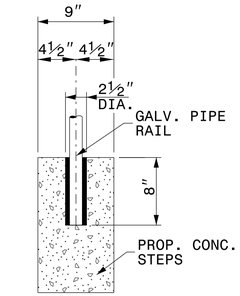

DETAIL "A"

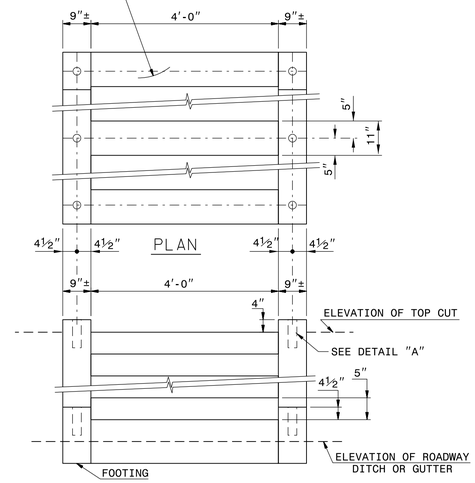

FRONT ELEVATION

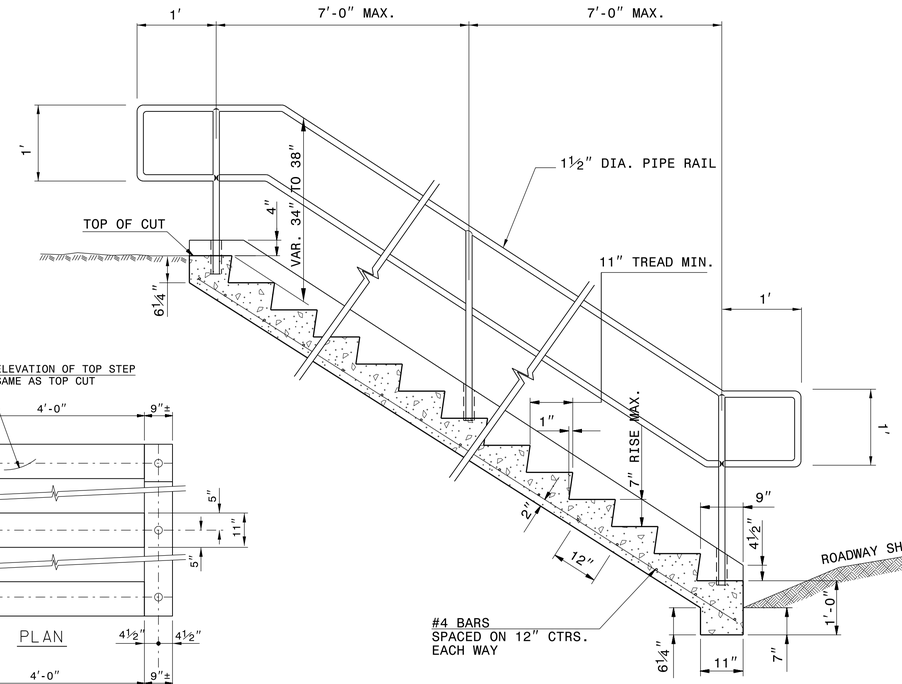

SECTION
CONCRETE STEPS

STATE OF
NORTH CAROLINA
DEPT. OF TRANSPORTATION
DIVISION OF HIGHWAYS
RALEIGH, N.C.

ENGLISH DETAIL DRAWING FOR

CONCRETE STEPS WITH HANDRAIL

SHEET 1 OF 1

844D01

NORTH CAROLINA PROFESSIONAL SEAL 022966 ENGINEER Joel S. Howerton

DocuSigned by: Joel Howerton 873F3D17DCDC45F...

11/16/2015

CONTRACT STANDARDS AND DEVELOPMENT UNIT
Office 919-707-6950 FAX 919-250-4119

SEE PLATE FOR TITLE

ORIGINAL BY: T.Spell DATE: Oct.7,1998
MODIFIED BY: DATE:
CHECKED BY: DATE:
FILE SPEC.: s:usr/details/stand/844d01e.dgn

$$$$SYSTIME$$$$
$$$$DGNNAME$$$$
$$$$USERNAME$$$$

5/14/99

PROJECT REFERENCE NO.	SHEET NO.
U-3308	2C-6

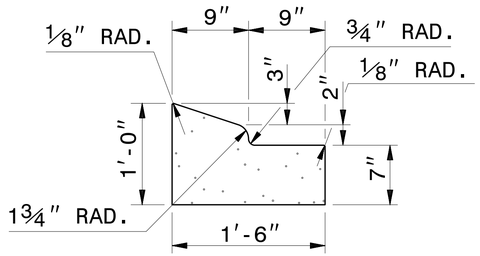

1'-6" CURB AND GUTTER

NOTE: SEE STD. DWG. 846.01 FOR ADDITIONAL CURB AND GUTTER INFORMATION.

SEE ROADWAY PLANS FOR LOCATION OF CURB TRANSITION.

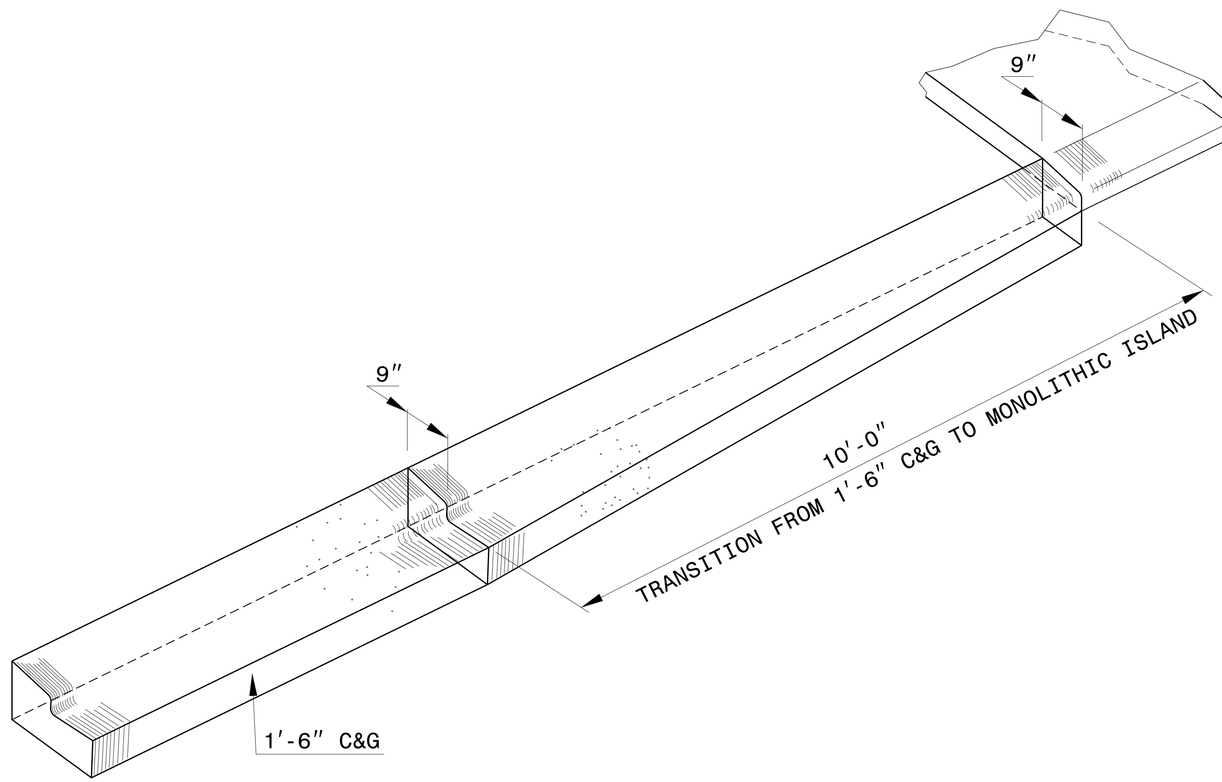

ISOMETRIC VIEW OF TRANSITIONING CURB & GUTTER

NORTH CAROLINA PROFESSIONAL SEAL 022966 ENGINEER JOEL S. HOWERTON

DocuSigned by: Joel Howerton 873F3D17DCDC45F...

11/16/2015

CONTRACTS STANDARDS AND DEVELOPMENT UNIT
Office 919-707-6950 FAX 919-250-4119

DETAIL OF 1'-6" CURB & GUTTER TRANSITION SECTION

ORIGINAL BY: _____ DATE: _____
MODIFIED BY: KKEMPF DATE: 09-24-14
CHECKED BY: _____ DATE: _____
FILE SPEC.: kkempf/english/curb gutter tansition.dgn

PROJECT REFERENCE NO.	SHEET NO.
U-3308	2C-7

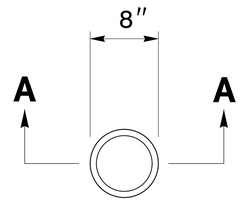

PLAN

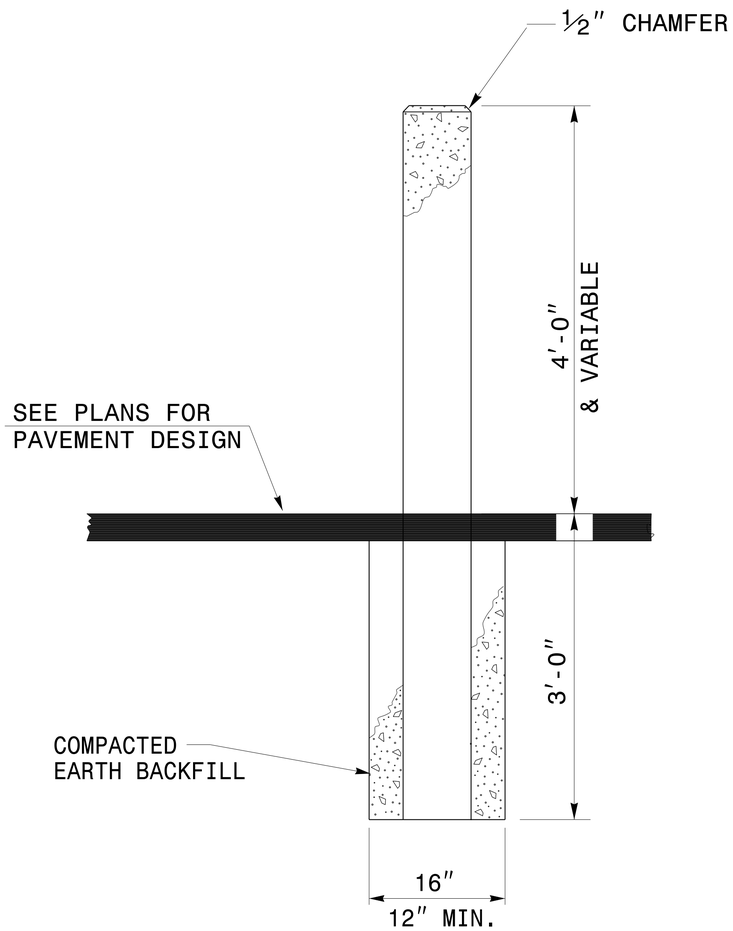

CROSS-SECTION VIEW
SECTION A-A

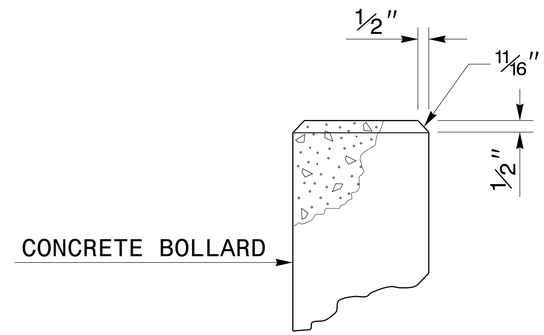

BOLLARD ELEVATION VIEW

GENERAL NOTES:

- CONSTRUCT THE BOLLARDS CLASS "B" CONCRETE AND IN CONJUNCTION WITH THE NC ROADWAY SPECIFICATIONS.
- PLACE BOLLARDS AS SHOWN IN THE ROADWAY PLANS AND AS DIRECTED BY THE ENGINEER.

NORTH CAROLINA PROFESSIONAL SEAL 022966 ENGINEER Joel S. Howerton

DocuSigned by: Joel Howerton 873F3D17DCDC45F... 11/16/2015

CONTRACT STANDARDS AND DEVELOPMENT UNIT
Office 919-707-6950 FAX 919-250-4119

DETAIL OF CONCRETE BOLLARDS

ORIGINAL BY:	T.S.Spell	DATE:	6-15-01
MODIFIED BY:		DATE:	
CHECKED BY:		DATE:	
FILE SPEC.:	w:detail/metric/stand/bollard.dgn		

$$$$SYSTEM$$$$
$$$$SCALE$$$$
$$$$USERNAME$$$$

PROJECT REFERENCE NO.	SHEET NO.
U-3308	2C-8

NOTES:

USE CLASS "B" CONCRETE THROUGHOUT.

ALL REINFORCING STEEL SHOULD BE ASTMA615-GRADE 60.

ALL REINFORCING STEEL SHOULD BE DEFORMED BARS. WHERE SPLICING OF REINFORCMENT IS NECESSARY, BARS ARE TO BE LAPPED 45 DIAMETERS. ALL DIMENSIONS RELATIVE TO REINFORCEMENT ARE TO CENTERS OF BARS.

REINFORCING STEEL TO BE CUT, BENT OR RELOCATED TO POSITION CATCH BASIN AS DIRECTED BY THE ENGINEER.

ALL EXPOSED CORNERS ARE TO BE CHAMFERED 1".

ALL MATERIAL AND WORKMANSHIP AS PER N.C.DEPARTMENT OF TRANSPORTATION STANDARD SPECIFICATIONS.

OPTIONAL CONSTRUCTION, MONOLITHIC POUR, 2" KEYWAY, OR #4 BAR DOWELS AT 12" CENTERS AS DIRECTED BY THE ENGINEER.

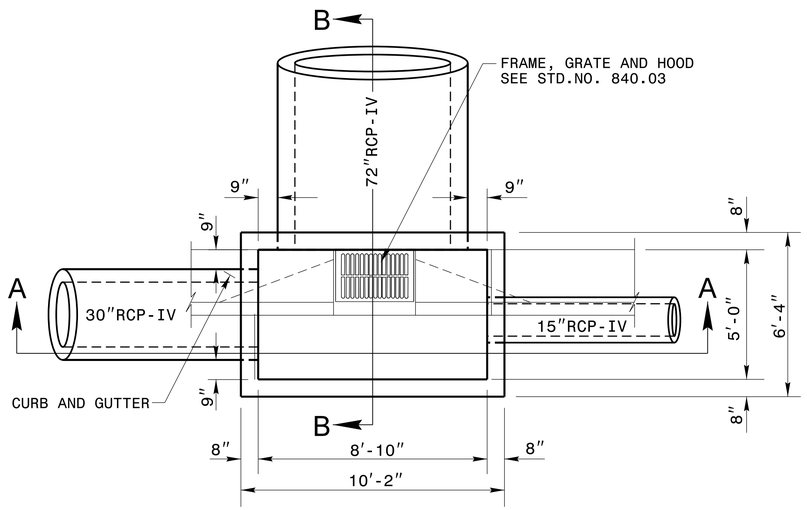

PLAN

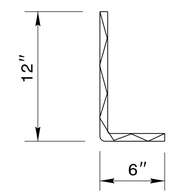

DOWEL

BILL OF MATERIAL

REINFORCING STEEL

BAR	SIZE	LENGTH	NO.	WEIGHT
H	#4	9'-10"	40	263
H1	#4	6'-0"	52	209
S	#4	5'-0"	10	34
V	#4	7'-6"	48	241
DOWEL (OPTION)			30	
REINF. STEEL LBS.				747
TOTAL CON./R.C. CU. YDS.				8.5
DEDUCTION FOR 1-15" RCP-IV				-0.1
DEDUCTION FOR 1-30" RCP-IV				-0.2
DEDUCTION FOR 1-72" RCP-IV				-1.0
CON./R.C. CU. YDS.				7.2

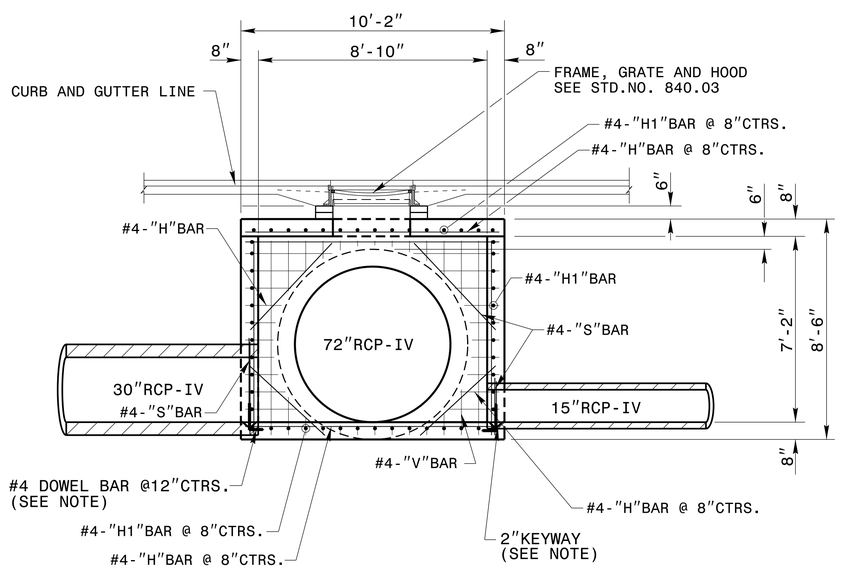

SECTION A-A

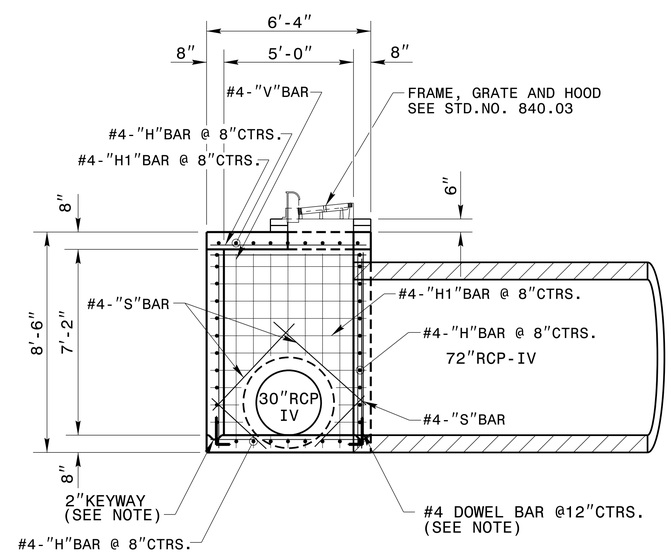

SECTION B-B

NORTH CAROLINA PROFESSIONAL SEAL 022966 ENGINEER Joel S. Howerton

DocuSigned by: Joel Howerton 873F3D17DCDC45F...

11/16/2015

STRUCTURE #1013

CONTRACT SERVICES & DEVELOPMENT UNIT
STANDARDS AND SPECIAL DESIGN
Office 919-707-6900 FAX 919-250-4119

DETAIL OF SPECIAL CATCH BASIN

ORIGINAL BY: _____ DATE: _____
MODIFIED BY: rnbritt DATE: 10-23-12
CHECKED BY: _____ DATE: _____
FILE SPEC.: details\nbritt\english\urban\u3308 72cb.dgn

$$$$SYSTEM$$$$
$$$$USERNAME$$$$

PROJECT REFERENCE NO.	SHEET NO.
U-3308	2C-9

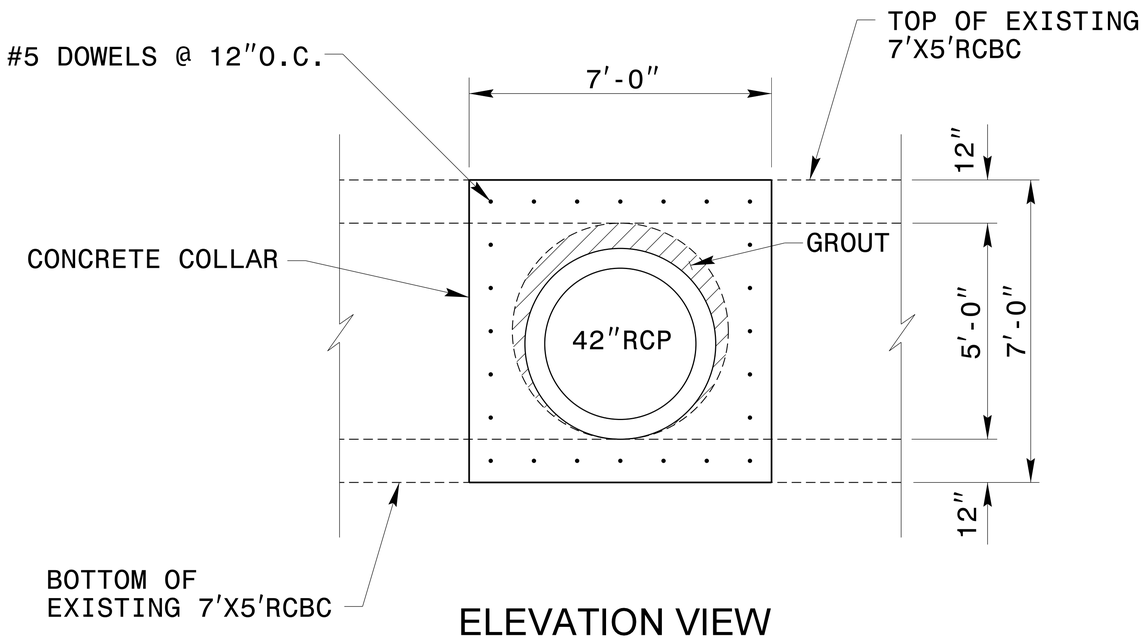

ELEVATION VIEW

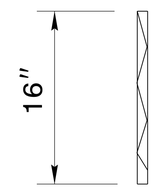

DOWEL

NOTES:

USE CLASS "AA" CONCRETE THROUGHOUT.

CORE 60" HOLE INTO THE SIDE OF THE EXISTING 7'X5'RCBC TO PLACE THE 42"RCP.

GROUT THE OPENING ONCE THE 42"RCP IS PLACED IN THE HOLE.

PLACE #5 DOWEL BARS IN THE BOX CULVERT. SECURE WITH AN APPROVED EPOXY OR GROUT.

POUR CONCRETE COLLAR AROUND THE 42"RCP. CONSTRUCT THE COLLAR FLUSH WITH TOP AND BOTTOM OF THE EXISTING 7'X5'RCBC.

ALL EXPOSED CORNERS ARE TO BE CHAMFERED 1".

ALL MATERIAL AND WORKMANSHIP AS PER N.C.DEPARTMENT OF TRANSPORTATION STANDARD SPECIFICATIONS.

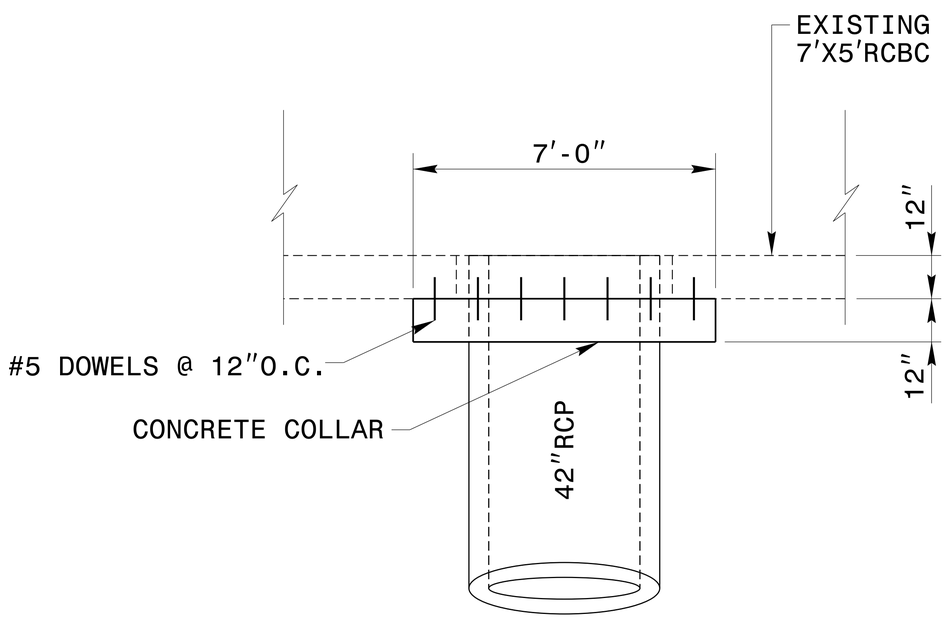

PLAN VIEW

BILL OF MATERIAL

REINFORCING STEEL

BAR	SIZE	LENGTH	NO.	WEIGHT
DOWEL	#5	1'-4"	24	34
REINF. STEEL LBS.				34
TOTAL CLASS "AA"CONCRETE CU. YDS.				1.3

NORTH CAROLINA PROFESSIONAL SEAL 022966 ENGINEER Joel S. Howerton

DocuSigned by: Joel Howerton 873F3D17DCDC45F...

11/16/2015

CONTRACT SERVICES & DEVELOPMENT UNIT
STANDARDS AND SPECIAL DESIGN
Office 919-707-6900 FAX 919-250-4119

DETAIL OF 42"RCP CONCRETE COLLAR

ORIGINAL BY: _____ DATE: _____
MODIFIED BY: rnbritt DATE: 11-07-14
CHECKED BY: _____ DATE: _____
FILE SPEC.: details\nbritt\english\urban\u3308 72cb.dgn

$$$$SYSTEM$$$$
$$$$USERNAME$$$$
$$$$DGN$$$$

PROJECT REFERENCE NO.	SHEET NO.
U-3308	2C-10

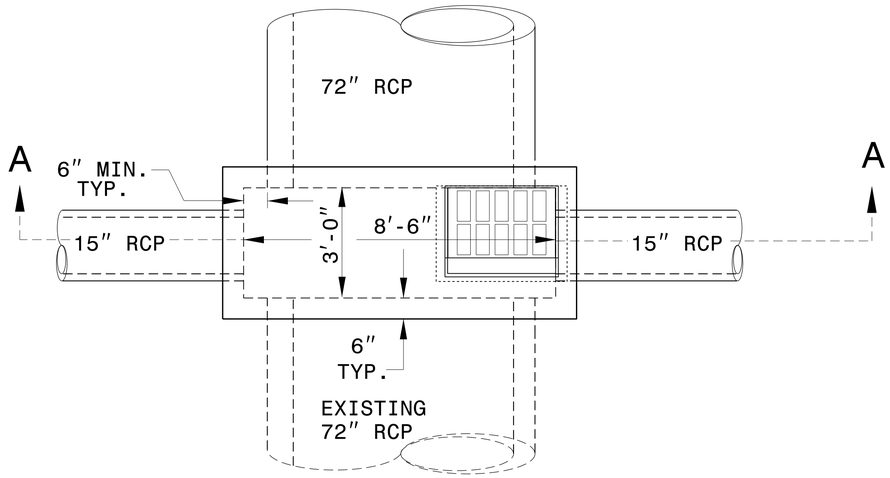

PLAN

BILL OF MATERIAL

BAR	NO.	SIZE	LENGTH	WEIGHT
H	31	#5	3′-8″	119
H1	3	#5	5′-8″	18
H2	5	#5	9′-2″	48
TOTAL REINF. STEEL (lbs.)				183
CLASS "B" CONC. (cu. yds.)				5.6
DEDUCTION FOR ONE PIPE (CY)				
72″ RCP				0.78
15″ RCP				0.04

NO DEDUCTIONS HAVE BEEN MADE FOR PIPE OPENINGS

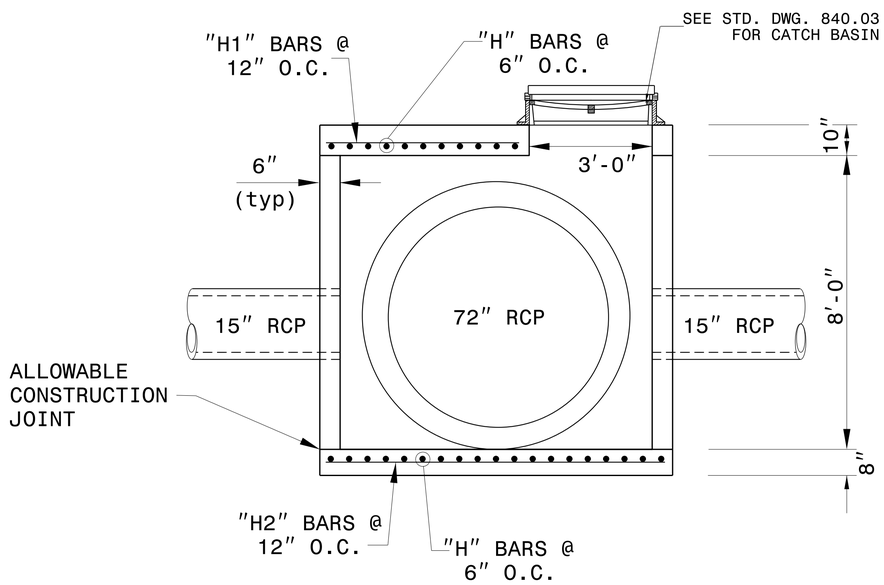

SECTION A-A

GENERAL NOTES:

-CONSTRUCT THE BASE SLAB BY FORMING.

-SEE STD. DWG. 840.00 FOR CONSTRUCTION OF BASE SLAB IF PIPE IS SET INTO BASE SLAB.

-USE CLASS 'B' CONCRETE THROUGHOUT.

-CONSTRUCTION OPTIONS: MONOLITHIC POUR; CONSTRUCTION JOINTS AT UNION OF WALLS WITH FLOOR AND/OR TOP SLAB.

-CUT, BEND OR RELOCATE REINFORCING STEEL AS NEEDED TO POSITION PIPE AS DIRECTED BY THE ENGINEER.

-CHAMFER ALL EXPOSED CORNERS 1″.

-JUNCTION BOXES OVER 3′-6″ IN DEPTH WITH MANHOLES REQUIRE STEPS TO BE PLACED ON 1′-2″ CTRS. REFERENCE STD. NO. 840.66.

NORTH CAROLINA PROFESSIONAL SEAL 022966 ENGINEER Joel S. Howerton

DocuSigned by: Joel Howerton 873F3D17DCDC45F...

11/16/2015

CONTRACTS STANDARDS AND DEVELOPMENT UNIT
Office 919-707-6950 FAX 919-250-4119

DETAIL OF SPECIAL CATCH BASIN

ORIGINAL BY: rnbritt DATE: 05-10-06
MODIFIED BY: kakempf DATE: 09-12-14
CHECKED BY: DATE:
FILE SPEC.: details/kkempf/english/U3308_CB54-42rcp.dgn

$$$$SYSTIME$$$$
$$$$USERNAME$$$$

PROJECT REFERENCE NO.	SHEET NO.
U-3308	2C-11

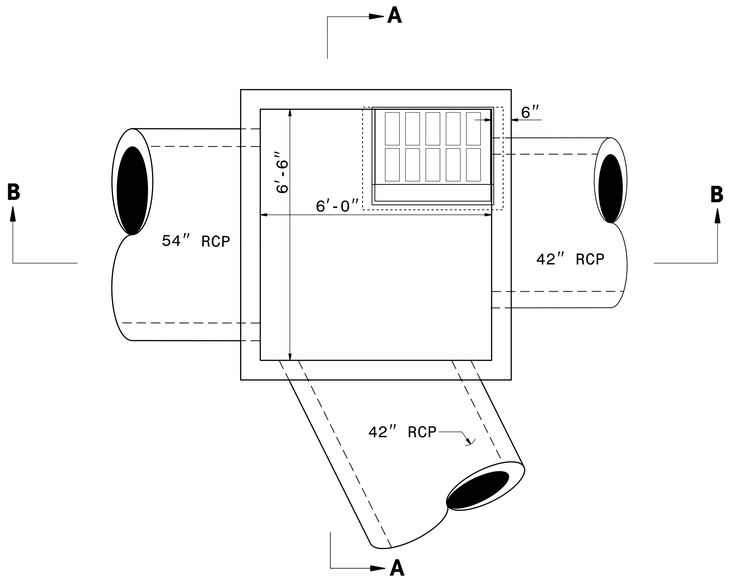

PLAN

GENERAL NOTES:

1. USE CLASS "B" CONCRETE THROUGHOUT.
2. CONSTRUCT CONCRETE BOX IN ACCORDANCE WITH SECTION 825 OF THE STANDARD SPECIFICATIONS.
3. USE FORMS TO CONSTRUCT THE BOTTOM SLAB.
4. ADJUST LENGTH OF STEEL BARS AS NEEDED TO COMPENSATE FOR PIPES AND FRAME AND GRATE OPENINGS.
5. REINFORCING STEEL SHALL CONFORM TO ASTM A 615, GRADE 400.
6. CUT OR BEND STEEL BARS AS NEEDED TO PROVIDE 2" CLEARANCE.
7. LOCATE FRAME AND GRATE AS FIELD CONDITIONS DICTATE AND AS DIRECTED BY THE ENGINEER.
8. PROVIDE STEPS 12" ON CENTER. USE STEPS WHICH COMPLY WITH STD. DRAWING 840.66.
9. DIMENSIONS MAY BE ADJUSTED IN THE FIELD AS DIRECTED BY THE ENGINEER.

BILL OF MATERIALS

BAR	QTY	SIZE	LENGTH	WEIGHT
A	25	#5	6'-8"	174
B	21	#5	7'-2"	157
C	7	#5	4'-6"	33
D	5	#5	3'-2"	17
TOTAL REINF. STEEL (lbs.)				381
TOTAL CONC. CU. YDS.				6.3
DEDUCTIONS FOR ONE PIPE (CY)				
42" RC PIPE				0.32
54" RC PIPE				0.49

NO DEDUCTIONS HAVE BEEN MADE TO ACCOMMODATE PIPES OR CATCH BASIN OPENING.

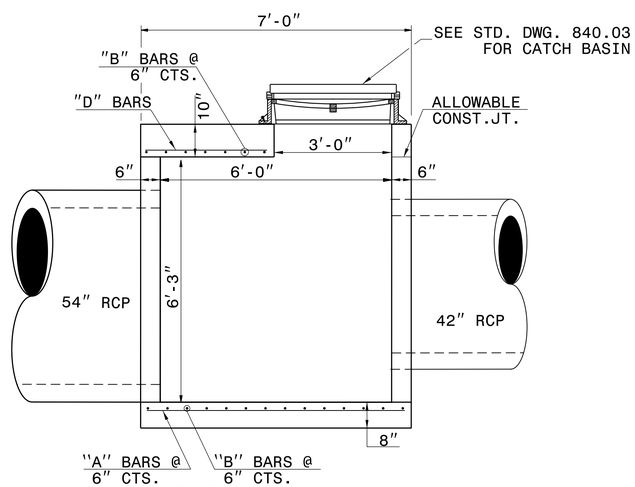

SECTION B-B

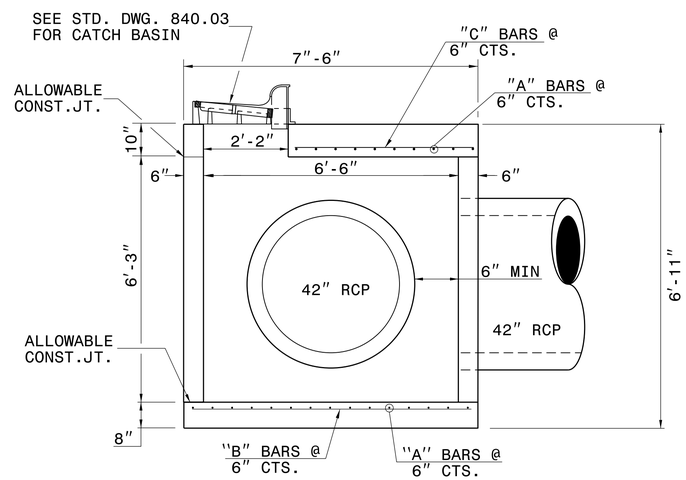

SECTION A-A

NORTH CAROLINA PROFESSIONAL SEAL 022966 ENGINEER Joel S. Howerton

DocuSigned by: Joel Howerton 873F3D17DCDC45F...

11/16/2015

CONTRACTS STANDARDS AND DEVELOPMENT UNIT
Office 919-707-6950 FAX 919-250-4119

DETAIL OF SPECIAL CATCH BASIN

ORIGINAL BY: K.A.KEMPF DATE: AUG 08,2008
MODIFIED BY: K.A.KEMPF DATE: AUG 12,2014
CHECKED BY: DATE:
FILE SPEC.: s:details/kkempf/english/U3308_cb54-42rcp.dgn

$$$$SYSTIME$$$$
$$$$USERNAME$$$$

PROJECT REFERENCE NO.	SHEET NO.
U-3308	2C-12

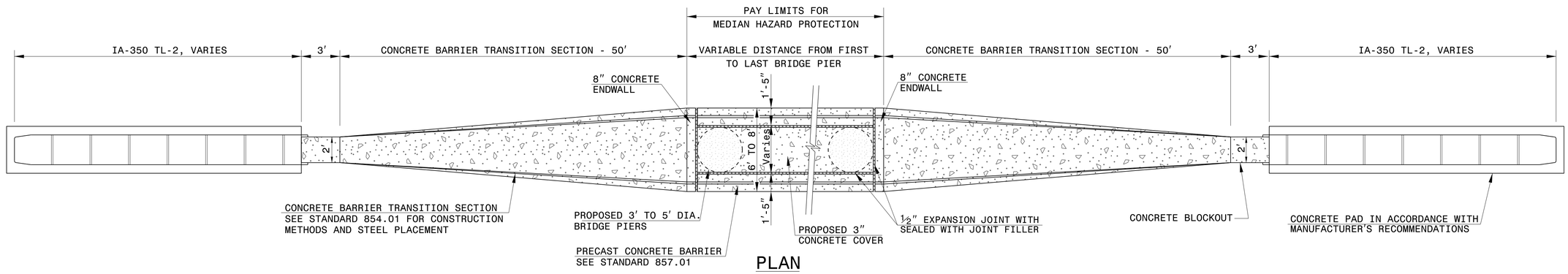

PLAN

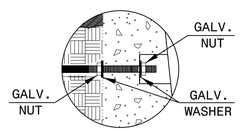

INSET 'A'

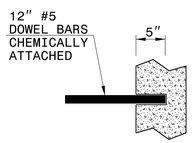

INSET 'B'

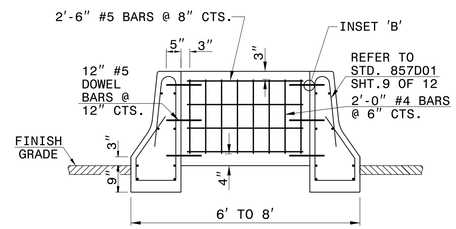

8" CONCRETE ENDWALL

GENERAL NOTES:

CONSTRUCT CONCRETE BARRIER CLASS 'AA' CONCRETE. (SEE SPECIFICATIONS SECTION 854).

CONSTRUCT EXPANSION AND CONTRACTION JOINTS AS SHOWN IN STANDARD DRAWING 854.01 SHEET 2.

SEAL EXPANSION JOINTS WITH JOINT FILLER. (SEE SECTION 1028 OF THE SPECIFICATIONS).

SUBMIT ALTERNATIVE METHODS FOR STEEL FABRICATION PLACEMENT FOR REVIEW.

SEE STANDARD DRAWING 854.01 SHEET 3 FOR STEEL LAYOUT OF BARRIERS.

*THE 2" DIMENSION FROM FINSIH GRADE TO THE BASE IS A MINIMUM DIMENSION.

INSET FIRST 1" DIA. GALVANIZED BAR 12'-6" AND SPACE THE REMAINING 1' BARS AT 25'-0".

USE AN APPROVED BONDING SYSTEM IN ACCORDANCE WITH SECTION 1081-1, TYPE 3A OF THE STANDARD SPECIFICATIONS.

SEAL ALL EXPANSION JOINTS WITH JOINT FILLER (SEE SECTION 1028 OF THE SPECIFICATIONS).

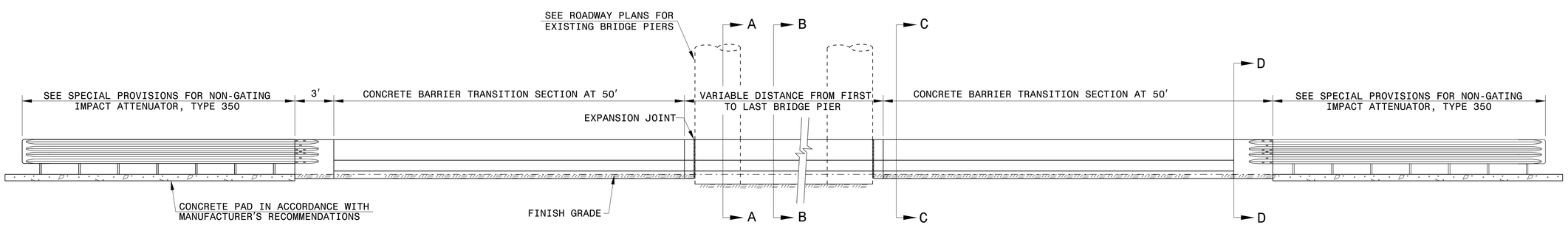

ELEVATION

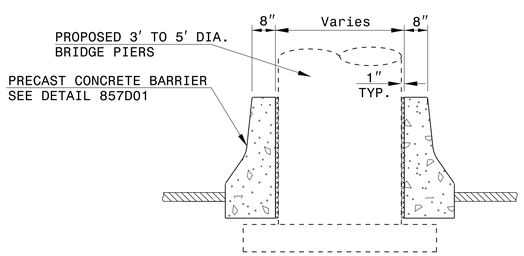

SECTION A-A

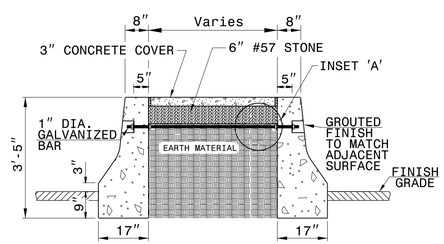

SECTION B-B

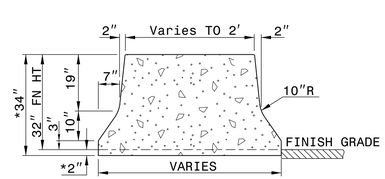

SECTION C-C

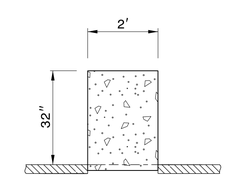

SECTION D-D

DOCUMENT NOT CONSIDERED FINAL
UNLESS ALL SIGNATURES COMPLETED

CONTRACT STANDARDS AND DEVELOPMENT UNIT
Office 919-707-6950 FAX 919-250-4119

DETAIL OF MEDIAN HAZARD PROTECTION

ORIGINAL BY: E.E. WARD DATE: 7-24-03
MODIFIED BY: rnbritt DATE: 7-18-08
CHECKED BY: DATE:
FILE SPEC.: s:usr\details\stand\transbarrier.dgn

revision: 7-18-08, rnbritt, changed bridge column width and barrier taper length.

$$$$$$$$SYSTIME$$$$
$$$$$$$$USERNAME$$$$

PROJECT REFERENCE NO.	SHEET NO.
U–3308	2C–13

*NOTE: SEE STD. DWG. 846.01
FOR GENERAL NOTES

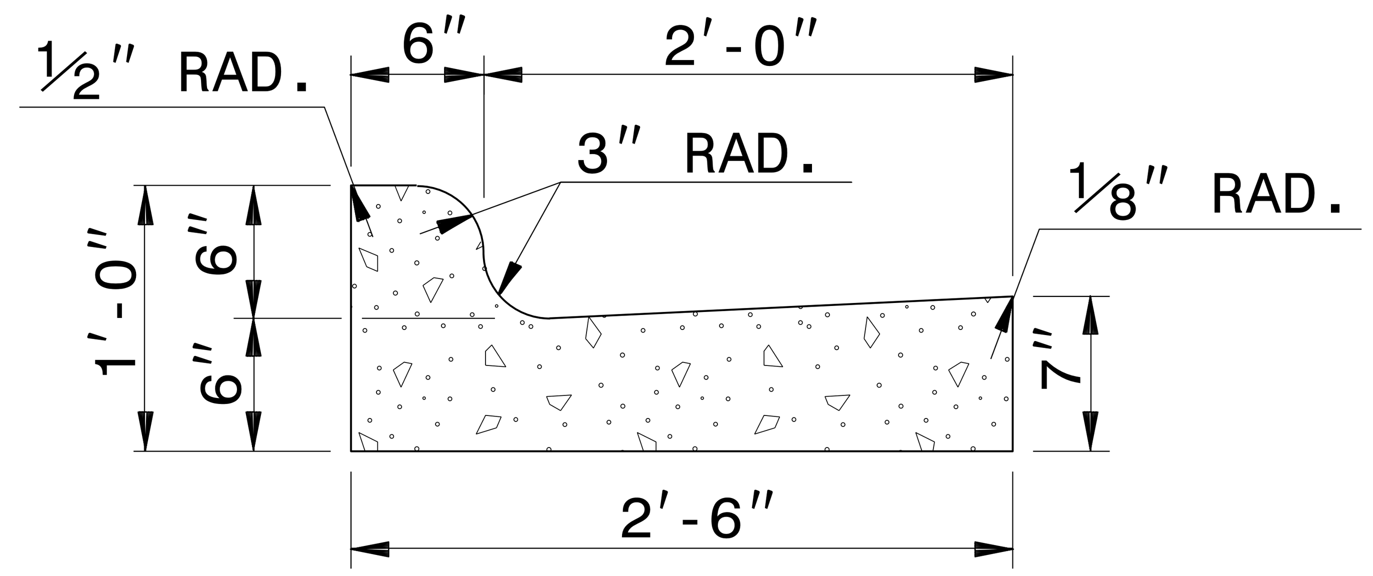

2′-6″ CURB AND GUTTER

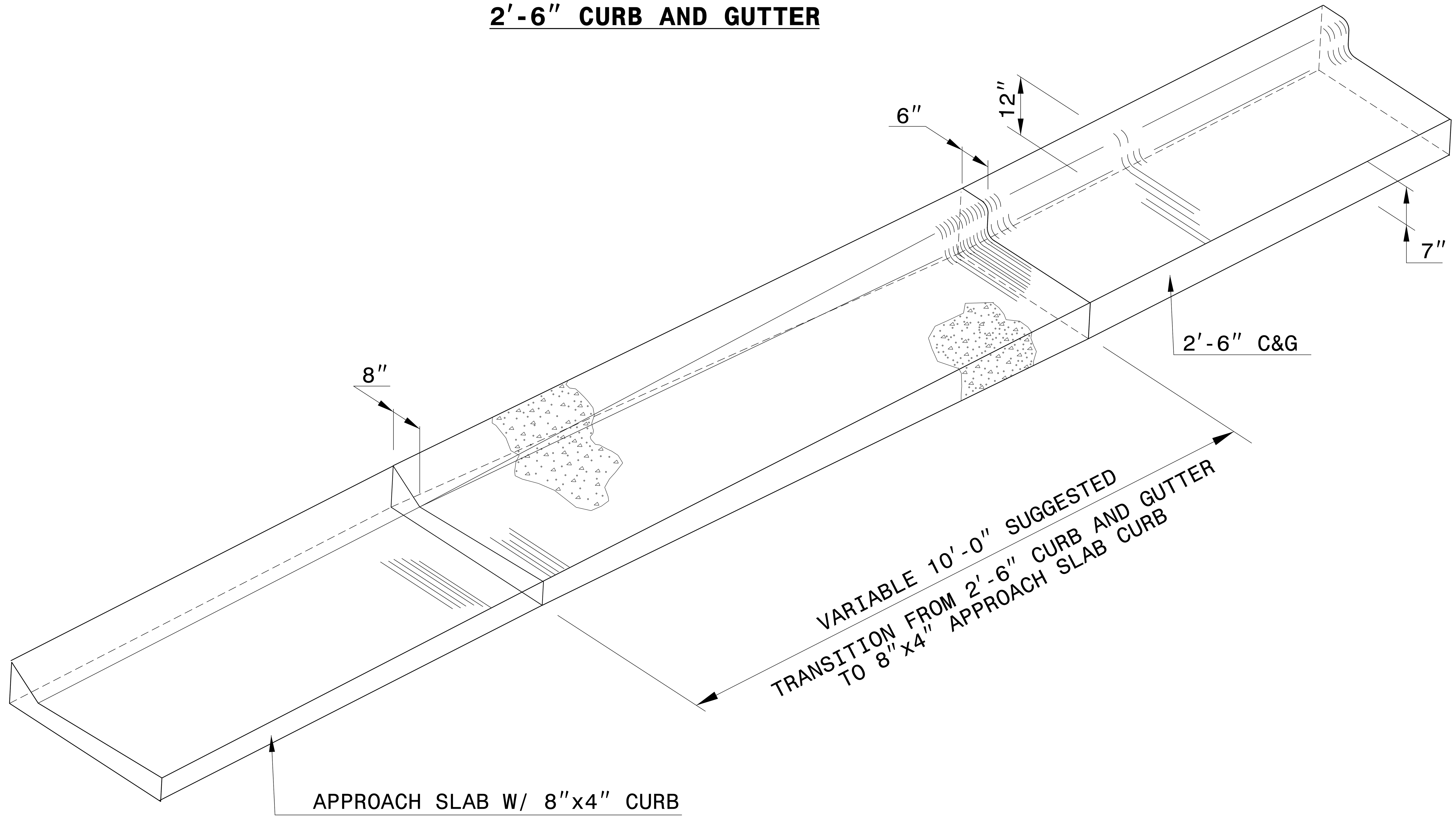

ISOMETRIC VIEW OF TRANSITION

NORTH CAROLINA PROFESSIONAL SEAL 022966 ENGINEER Joel S. Howerton

DocuSigned by: Joel Howerton 873F3D17DCDC45F... 11/16/2015

CONTRACT STANDARDS AND DEVELOPMENT UNIT
Office 919-707-6950 FAX 919-250-4119

DETAIL OF 2′-6″ CURB & GUTTER TO 8″x4″ APPROACH SLAB CURB TRANSITION SECTION

ORIGINAL BY: E.E. WARD DATE: 5-29-02
MODIFIED BY: DATE:
CHECKED BY: DATE:
FILE SPEC.: /usr/details/stand/cgtransit.dgn

5/14/99
$$$$SYSTIME$$$$
$$$$$$$$DGN$$$$$$$$$$$$$$$
$$$$USERNAME$$$$

5/14/99

PROJECT REFERENCE NO.	SHEET NO.
U-3308	2C-14

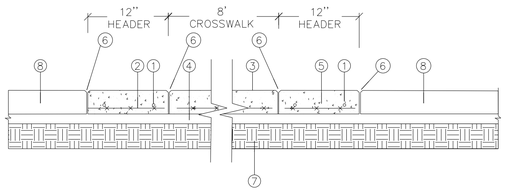

COLORED CONCRETE CROSSWALK WITH CONCRETE HEADERS

1 NOT TO SCALE

1. TWO (2) #4 REBAR FOR EACH HEADER (PROVIDE COVER FROM ALL SIDES)
2. CONTINUOUS 6" X 6" X W2.9 X W2.9 WELDED WIRE MESH (FOR CROSSWALK AND CONCRETE HEADERS ONLY)
3. IMPRINTED/COLORED CONCRETE (SEE PLAN FOR TYPE)
4. 4" B25.0 ASPHALT CONCRETE BASE
5. 8" CONCRETE
6. 1/4" TOOLED CHAMFERED EDGE (BOTH SIDES)
7. COMPACTED SUBGRADE
8. ADJACENT ASPHALT ROADWAY

PAVER SPECS:
8" THICK
STYLE: STONE TILE – STACKED STONE PATTERN
CONRETE: 4,000 PSI STRAIGHT CEMENT
COLOR TO MIX IN TRUCK CHILI PEPPER (1 BAG PER CY)(QC PRODUCTS)
COLOR HARDENER CHILI PEPPER (QC PRODUCTS)
RELEASE STONE GRAY (QC PRODUCTS)
CONCRETE RETARDER (IF NEEDED) FRITZ PACK
SEALER MATTE FINISH (QC PRODUCTS)

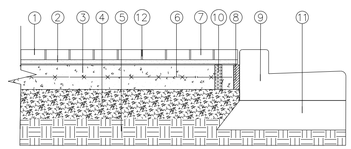

REINFORCED PAVER WALKWAY WITH CONTINUOUS PAVER BAND AT CURB

2 NOT TO SCALE

1. PAVER (SEE PLAN FOR TYPE)
2. 1 1/2" SETTING BED MATERIAL
3. 6" CONCRETE SLAB
4. 4" COMPACTED BASE COURSE
5. COMPACTED SUBGRADE
6. 6" X 6" X W2.9 X W2.9 WELDED WIRE MESH
7. CONTINUOUS PAVER BAND
8. EXPANSION JOINT (BETWEEN CONCRETE SUB-SLAB AND CURB)
9. CONCRETE CURB AND GUTTER (SEE ROADWAY PLANS)
10. 6-2" DIA DRAIN HOLES, 12" O.C. PARALLEL TO CURB – LOCATE AT LOWEST ELEV. FILL WITH PEA GRAVEL
11. ADJACENT ASPHALT ROADWAY
12. FILL THE BRICK JOINTS WITH POLYMERIC SAND

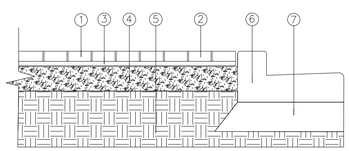

STANDARD PAVER WALKWAY WITH CONTINUOUS PAVER BAND AT CURB

3 NOT TO SCALE

1. PAVER (SEE PLAN FOR TYPE)
2. CONTINUOUS PAVER BAND
3. 1 1/2" SETTING BED MATERIAL
4. 6" COMPACTED BASE COURSE
5. COMPACTED SUBGRADE
6. CONCRETE CURB AND GUTTER (SEE ROADWAY PLANS)
7. ADJACENT ASPHALT ROADWAY

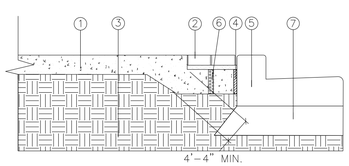

CONCRETE WALKWAY WITH CONTINUOUS PAVER BAND AT CURB

4 NOT TO SCALE

1. 4" CONCRETE SIDEWALK
2. CONTINUOUS PAVER BAND ON 3 1/2" SETTING BED
3. COMPACTED SUB-GRADE
4. EXPANSION JOINT (BETWEEN CONCRETE SUB-SLAB AND CURB)
5. CONCRETE CURB AND GUTTER (SEE ROADWAY PLANS)
6. 6-2" DIA DRAIN HOLES, 12" O.C. PARALLEL TO CURB – LOCATE AT LOWEST ELEVATIONS – FILL WITH PEA GRAVEL
7. ADJACENT ASPHALT ROADWAY

NOTE: REFER TO PEDESTRIAN CONCRETE FINISH DETAIL

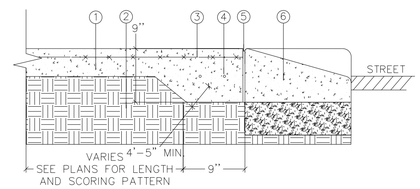

HEAVY DUTY CONCRETE WALKWAY AT CONCRETE DRIVEWAY APRONS

4A NOT TO SCALE

1. 6" CONCRETE
2. COMPACTED SUB-GRADE
3. 6" X 6" X W2.9 X W2.9 WELDED WIRE MESH
4. 2 EACH – #4 REBAR (CONTINUOUS)
5. EXPANSION JOINT (BETWEEN CONCRETE SUB-SLAB AND CURB)
6. CONCRETE DRIVEWAY APRON (SEE ROADWAY PLANS)

NOTE: REFER TO PEDESTRIAN CONCRETE FINISH DETAIL

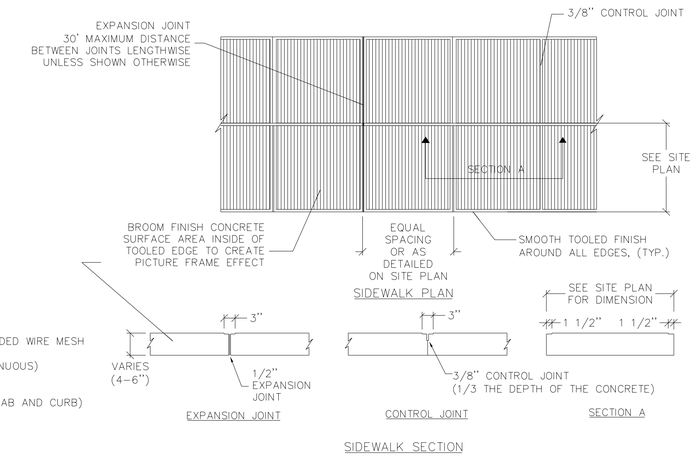

CONCRETE WALKWAY FINISH DETAIL

5 NOT TO SCALE

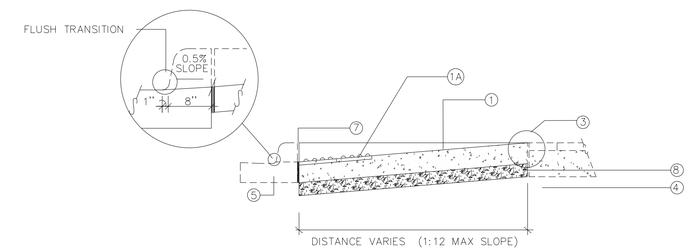

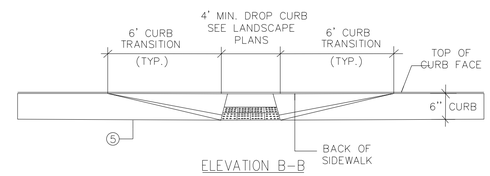

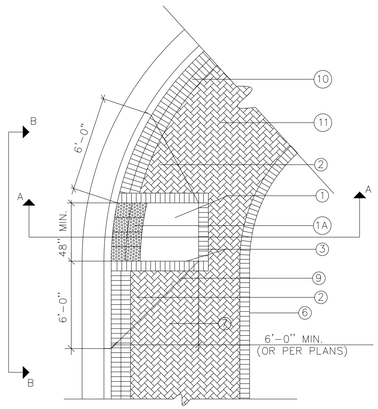

1. 8" HEAVY DUTY CONCRETE HANDICAP RAMP (RAMP DOWN TOWARD STREET AT 12:1 MAX.)
1A. ADA APPROVED POLYMER CONCRETE DETECABLE WARNING TILES TO BE PLACED IN A 2' BAND FROM BACK OF CURB-COLOR TO BE CHARCOAL GRAY (SEE NOTE B BELOW)
2. 12:1 MAX SLOPES ON SIDE FLARES
3. RAMP TO PAVER FIELD TRANSITION
4. COMPACTED SUBGRADE
5. CURB AND GUTTER. (REF. TO ROADWAY PLANS)
6. EDGE OF WALK OR FACE OF BUILDING
7. EXPANSION JOINT
8. 4" COMPACTED BASE COURSE
9. RAMP FLARE TRANSITION LINE
10. RED BORDER BRICK: SINGLE/DOUBLE SOLDIER COURSE MANUFACTURER: PINE HALL BRICK STYLE: ENGLISH EDGE-IRON SPOT
11. RED FIELD BRICK: 45 DEGREE HERRINGBONE PATTERN MANUFACTURER: PINE HALL BRICK STYLE: ENGLISH EDGER-FULL RANGE

GENERAL NOTES

A. REFER TO ROADWAY PLANS FOR LOCATIONS OF CURB-CUT RAMPS.

B. INSTALL TILES PER MANUFACTURUERS RECOMENDATIONS.

C. TRANSISTION CURB FROM FLUSH/DROP TO 6" STANDARD CURB SHALL BE 6'0" TYPICAL.

CONCRETE HANDICAP RAMP

6 NOT TO SCALE

NORTH CAROLINA PROFESSIONAL SEAL 022966 ENGINEER Joel S. Howerton

DocuSigned by: Joel Howerton 873F3D17DCDC45F... 11/16/2015

CONTRACT STANDARDS AND DEVELOPMENT UNIT
Office 919-707-6950 FAX 919-250-4119

BRICK PAVERS FOR SIDEWALK AND CURB RAMPS

ORIGINAL BY: J. Howerton DATE: 1/26/15
MODIFIED BY: DATE:
CHECKED BY: DATE:
FILE SPEC.: jhowerton/City of Durham Brick Pavers.dgn

$$$$SYSTIME$$$$
$$$$USERNAME$$$$
$$$$CELL$$$$

PROJECT REFERENCE NO.	SHEET NO.
U-3308	2C-15

STATE OF NORTH CAROLINA DEPT. OF TRANSPORTATION DIVISION OF HIGHWAYS RALEIGH, N.C.

ENGLISH STANDARD DRAWING FOR
STRUCTURE ANCHOR UNITS
GUARDRAIL ANCHOR UNIT, TYPE III MODIFIED FOR ATTACHMENT TO RAIL ON BRIDGE

SHEET 1 OF 2
862D03

ELEVATION

NOTE:
-LAP JOINTS IN THE DIRECTION OF TRAFFIC FLOW.
-SEE SHEET 2 FOR POST SECTIONS 1 THRU 9.

PLAN VIEW

GUARDRAIL ANCHOR UNIT, TYPE III MODIFIED FOR ATTACHMENT TO RAIL ON BRIDGE

ENGLISH STANDARD DRAWING FOR
STRUCTURE ANCHOR UNITS
GUARDRAIL ANCHOR UNIT, TYPE III MODIFIED
FOR ATTACHMENT TO RAIL ON BRIDGE

STATE OF NORTH CAROLINA DEPT. OF TRANSPORTATION DIVISION OF HIGHWAYS RALEIGH, N.C.

SHEET 1 OF 2
862D03

STATE OF NORTH CAROLINA DEPT. OF TRANSPORTATION DIVISION OF HIGHWAYS RALEIGH, N.C.

ENGLISH STANDARD DRAWING FOR
STRUCTURE ANCHOR UNITS
GUARDRAIL ANCHOR UNIT, TYPE III MODIFIED

SHEET 2 OF 2
862D03

SECTION OF THRIE BEAM POSTS 1 THRU 6

SECTION OF THRIE BEAM BEAM POST 7-9

THRIE-BEAM SECTION

END SHOE

THRIE BEAM LINE POST

THRIE BEAM OFFSET BLOCK

ENGLISH STANDARD DRAWING FOR
STRUCTURE ANCHOR UNITS
GUARDRAIL ANCHOR UNIT, TYPE III MODIFIED

SHEET 2 OF 2
862D03

STATE OF NORTH CAROLINA DEPT. OF TRANSPORTATION DIVISION OF HIGHWAYS RALEIGH, N.C.

NORTH CAROLINA PROFESSIONAL SEAL 022966 ENGINEER Joel S. Howerton

DocuSigned by: Joel Howerton 873F3D17DCDC45F...

11/16/2015

CONTRACT STANDARDS AND DEVELOPMENT UNIT
Office 919-707-6950 FAX 919-250-4119

SEE TITLE BLOCK

ORIGINAL BY: _____ DATE: _____
MODIFIED BY: _____ DATE: _____
CHECKED BY: _____ DATE: _____
FILE SPEC.: nbritt\english\urban\Type III Modified.dgn

5/14/99

$$$$SYSTEM$$$$ $$$$USERNAME$$$$ $$$$DGN$$$$ $$$$$$$$$$$$$$$$

5/14/99

PROJECT REFERENCE NO.	SHEET NO.
U-3308	2C-16

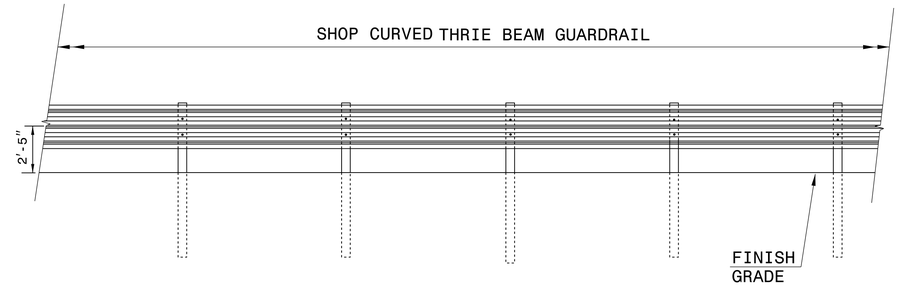

ELEVATION VIEW "Y"

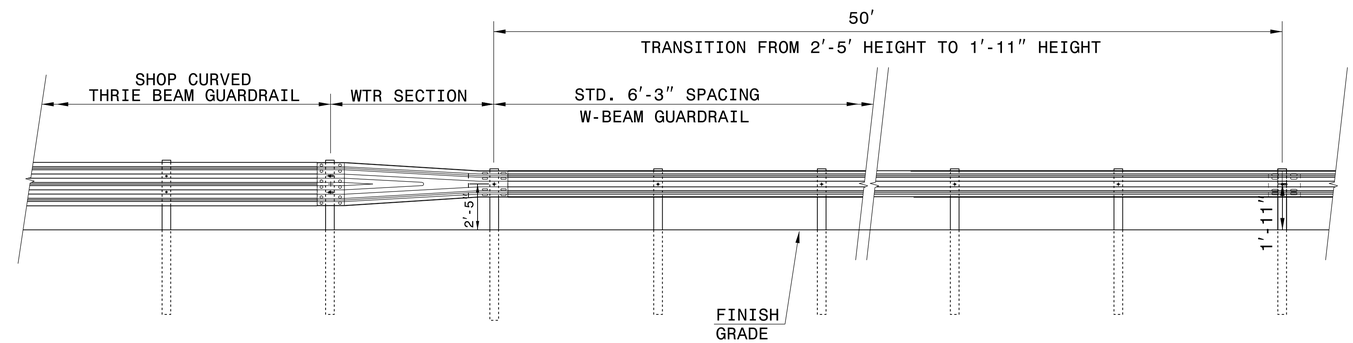

ELEVATION VIEW "X"

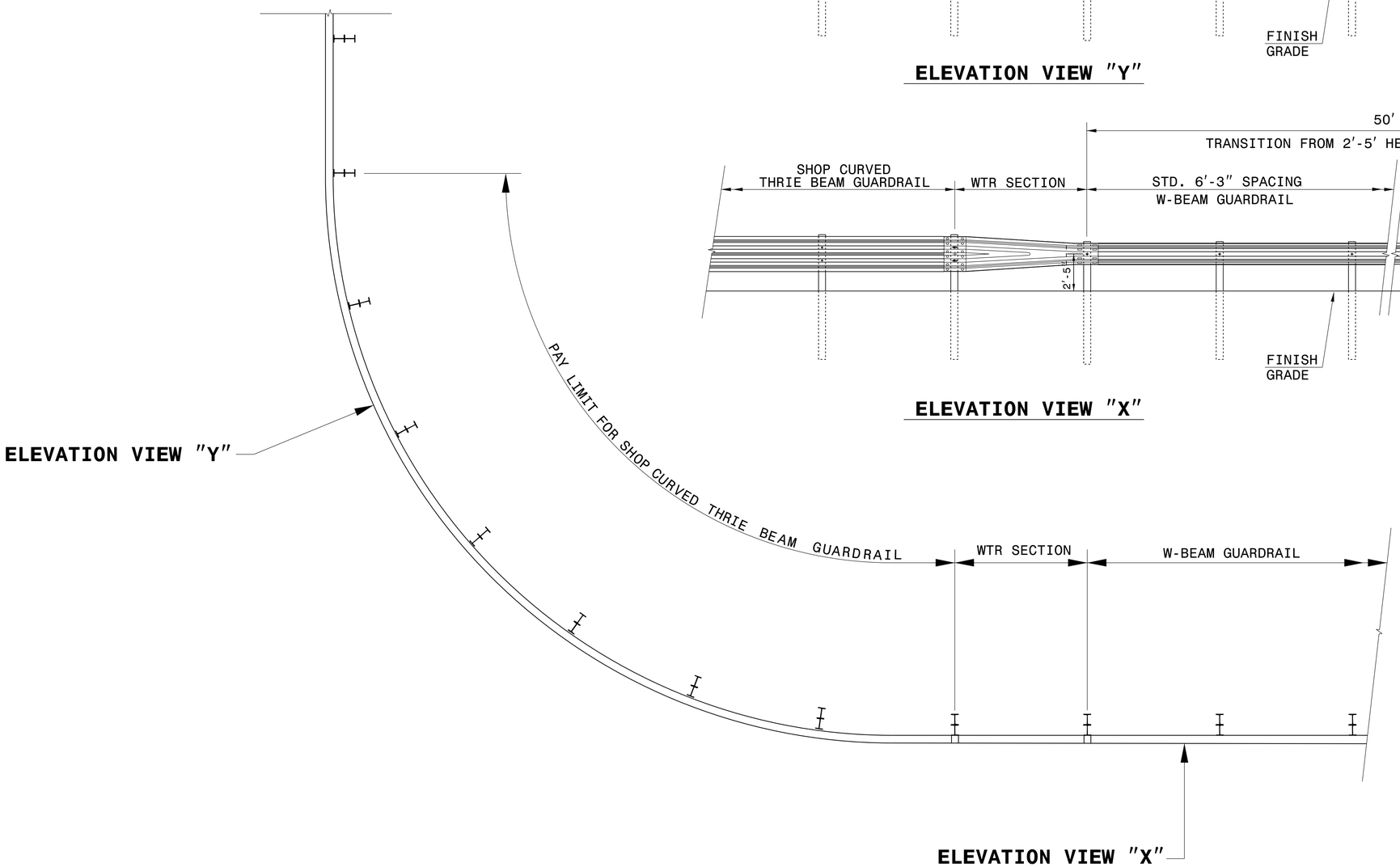

PLAN

NOTES:

- **USE STD. 6'-3" POST SPACING IN THIS AREA.**
- **REFER TO RDWY. STDS. 862.01, 862.02 AND 862.03 FOR PLACEMENT AND OTHER GUARDRAIL DETAIL INFORMATION.**

NORTH CAROLINA PROFESSIONAL SEAL 022966 ENGINEER Joel S. Howerton

DocuSigned by: Joel Howerton 873F3D17DCDC45F...

11/16/2015

CONTRACT STANDARDS & DEVELOPMENT UNIT
STANDARDS AND SPECIAL DESIGN
Office 919-707-6950 FAX 919-250-4119

SHOP CURVED THRIE BEAM GUARDRAIL

ORIGINAL BY: _____ DATE: _____
MODIFIED BY: rnbritt DATE: 02-23-15
CHECKED BY: _____ DATE: _____
FILE SPEC.: details/nbritt/english/guardrail/scthri beam rail.dgn

PROJECT REFERENCE NO.	SHEET NO.
U-3308	2C-17

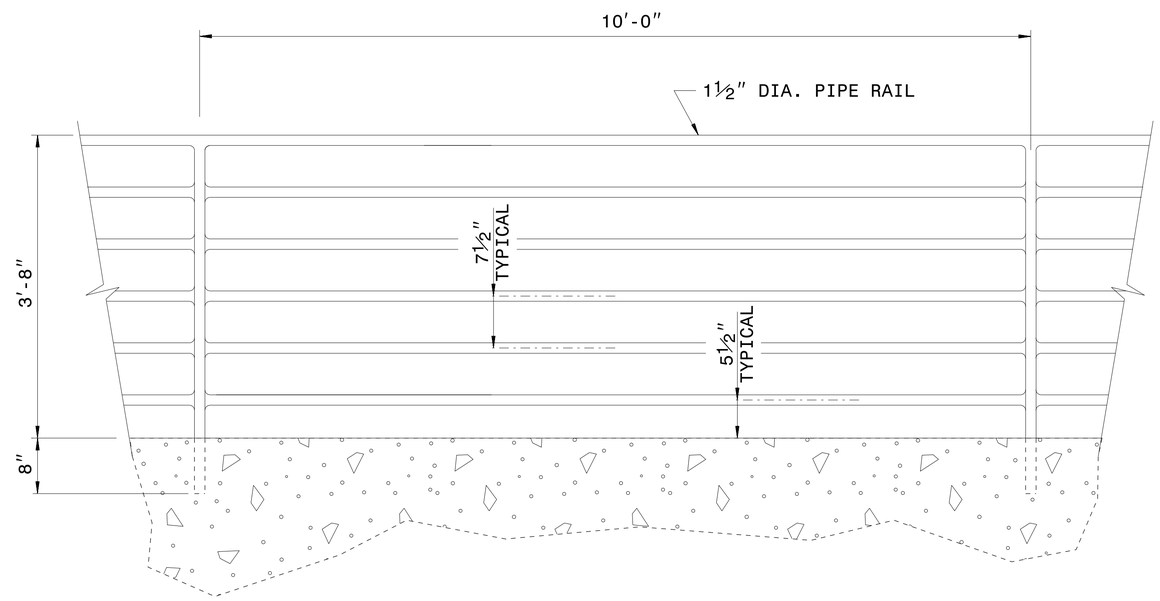

ELEVATION OF HANDRAIL

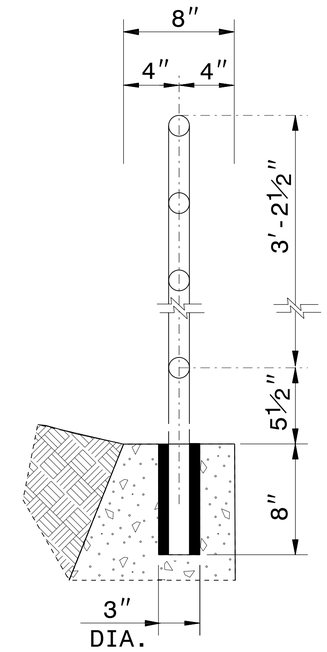

INSET 'A'

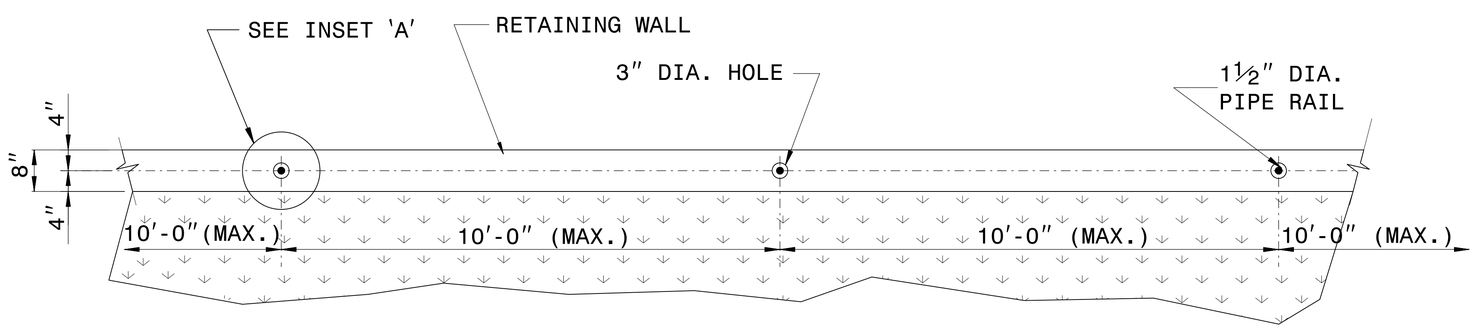

PLAN VIEW

NOTES:

CONSTRUCT PROPOSED STEEL PIPE RAIL 1½" DIAMETER SCHEDULE 40 PLAIN END GALVANIZED STEEL PIPE MEETING THE REQUIREMENTS OF ASTM A53.

EMBED PIPE RAIL 8" INTO PROPOSED WALL WITH CHEMICAL OR CONCRETE GROUT ANCHORING SYSTEM AS DIRECTED BY THE ENGINEER.

REPAIR GALVANIZING IN ACCORDANCE WITH SECTION 1076 OF THE NCDOT STANDARD SPECIFICATIONS.

PAINT, IF REQUIRED BY THE ENGINEER, IN ACCORDANCE WITH SECTION 1080 OF THE STANDARD SPECIFICATIONS.

CENTER THE PROPOSED RAILING ON TOP OF THE WALL WITH POST SPACING SYMMETRICAL ABOUT THE CENTER-LINE OF THE WALL.

USE A ROTARY DRILL IF NEEDED FOR EMBEDMENT HOLES OF RAIL IN WALL. ROTARY DRILL ONLY (NO ROTARY-IMPACT DRILLS).

WELD IN ACCORDANCE WITH ARTICLE 1072-18 OF THE STANDARD SPECIFICATIONS.

NORTH CAROLINA PROFESSIONAL SEAL 022966 ENGINEER Joel S. Howerton

DocuSigned by: Joel Howerton 873F3D17DCDC45F...

11/16/2015

CONTRACT STANDARDS AND DEVELOPMENT UNIT
Office 919-707-6950 FAX 919-250-4119

DETAIL OF PIPE HANDRAIL MOUNTED ON RETAINING WALL

ORIGINAL BY: E.E. WARD DATE: 12-99
MODIFIED BY: DATE:
CHECKED BY: DATE:
FILE SPEC.: jhowerton/handrail on retaining wall.dgn

$$$$SYSTIME$$$$
$$$$USERNAME$$$$

PROJECT REFERENCE NO.	SHEET NO.
U-3308	2C-18

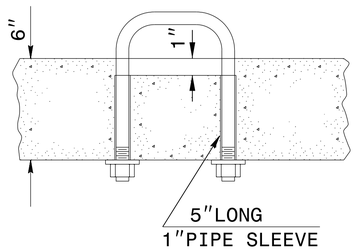

PARTIAL SECTION

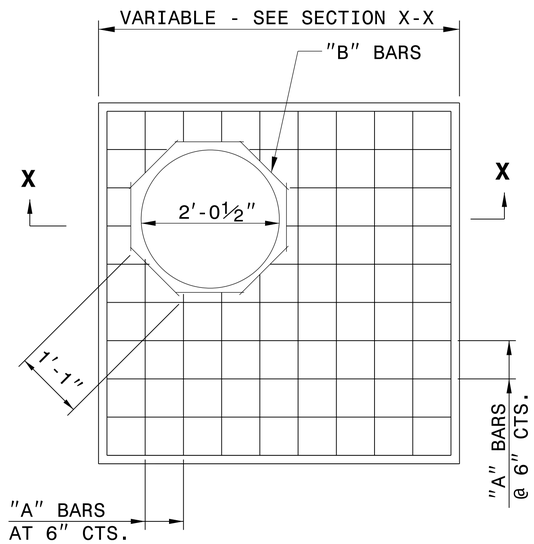

PLAN

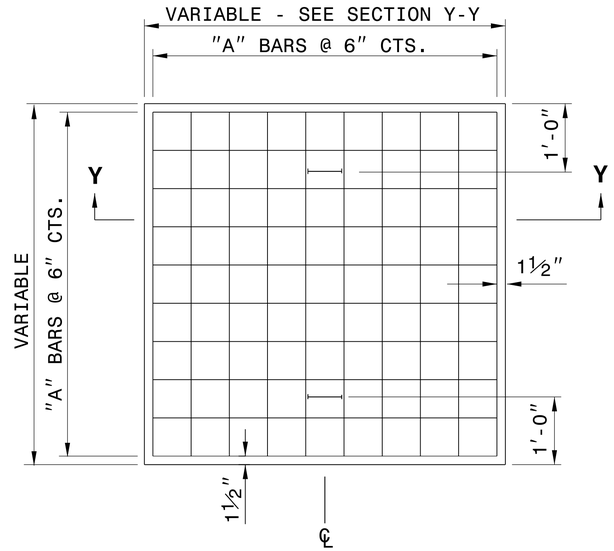

PLAN

GENERAL NOTES:

CONSTRUCT IN ACCORDANCE WITH SECTION 859 OF THE STANDARD SPECIFICATIONS.

THE DIMENSIONS FOR THE EXISTING BOXES ARE APPROXIMATE AND MAY VARY SLIGHTLY.

DETAIL INTENDED FOR NON-TRAFFIC BEARING DRAINAGE STRUCTURES.

BILL OF MATERIALS

REINFORCING STEEL				
CODE	SIZE	QTY.	LENGTH	REINF. STEEL LBS.
A	#4	20	4'-6"	60.12
B	#4	8	1'-1"	5.79
TOTAL				65.91 *

MASONRY	CU YDS
TOP SLAB CONCRETE CLASS "B"	.4326 *
BRICK MASONRY PER FT HT (MIN)	.4111

* NOTE:
QUANTITIES BASED ON 3'-6" X 3'-6" DRAINAGE STRUCTURE. ADJUST QUANTITIES FOR LARGER STRUCTURES AND MANHOLE CONSTRUCTION.

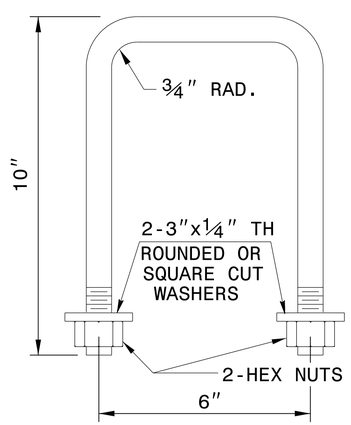

DETAIL OF HANDLE

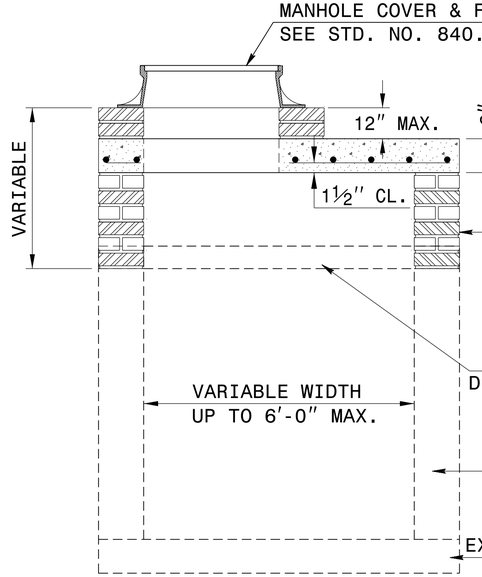

SECTION X-X

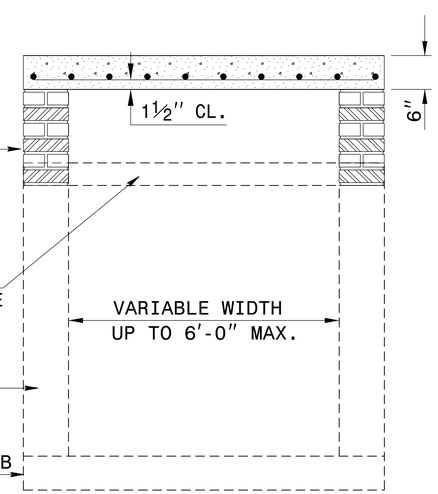

SECTION Y-Y

NORTH CAROLINA PROFESSIONAL SEAL 022966 ENGINEER Joel S. Howerton

DocuSigned by: Joel Howerton 873F3D17DCDC45F... 11/16/2015

CONTRACT STANDARDS AND DEVELOPMENT UNIT
Office 919-707-6950 FAX 919-250-4119

DETAIL TO CONVERT EXISTING DI, CB, OTCB or GI TO JUNCTION BOX (MANHOLE OPTIONAL)

ORIGINAL BY: T.S.S. DATE: NOV.1997
MODIFIED BY: T.S.S. DATE: FEB.2000
CHECKED BY: DATE:
FILE SPEC.: ds174:/usr/details/stand/boxtojbe.dgn

SYSTIME$$$$ SYSTIME$$$$ SYSTIME$$$$ SYSTIME$$$$
$$$$ CSRNAME$$$$ CSRNAME$$$$ CSRNAME$$$$ CSRNAME$$$$

PROJECT REFERENCE NO.	SHEET NO.
U-3308	2C-19

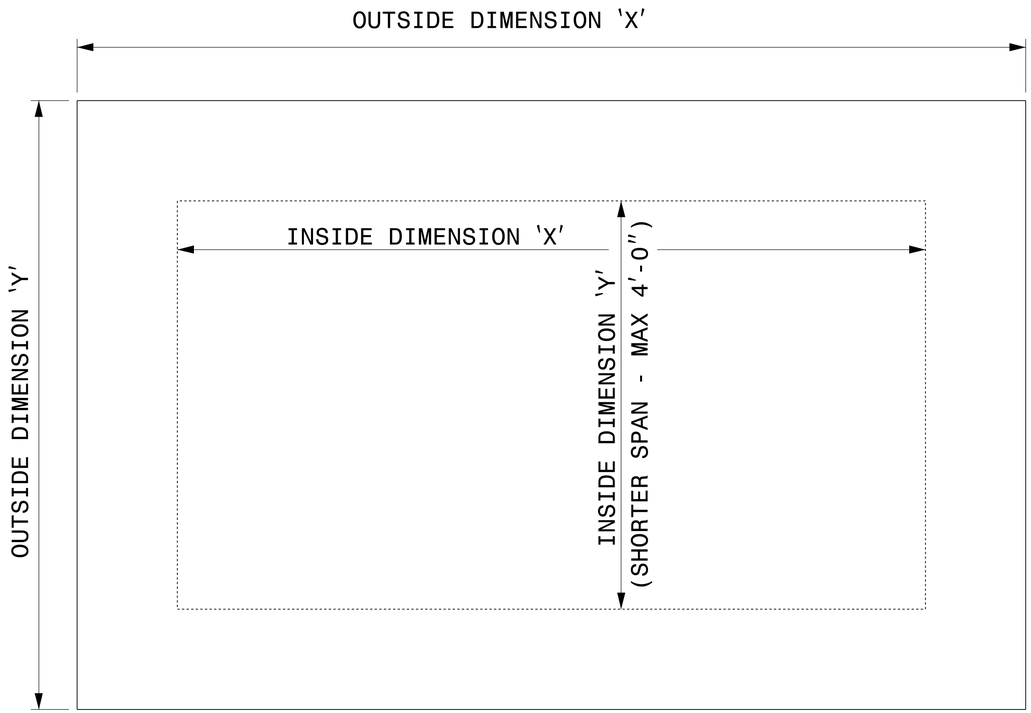

PLAN VIEWS

GENERAL NOTES:

-USE GRADE A36 STEEL
-STEEL COVERS ARE FOR TEMPORARY USE DURING PHASE CONSTRUCTION.
-FILL SHALL BE PLACED DIRECTLY OVER THE STEEL PLATES.
-SEE ROADWAY PLANS AND PROVISIONS FOR LOCATIONS
-QUANTITES TO BE PAID FOR AT THE UNIT PRICE BID PER EACH.

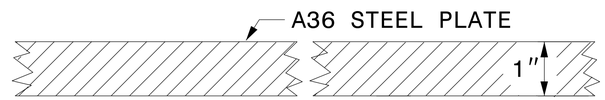

SECTION VIEW OF STEEL TOP PLATE

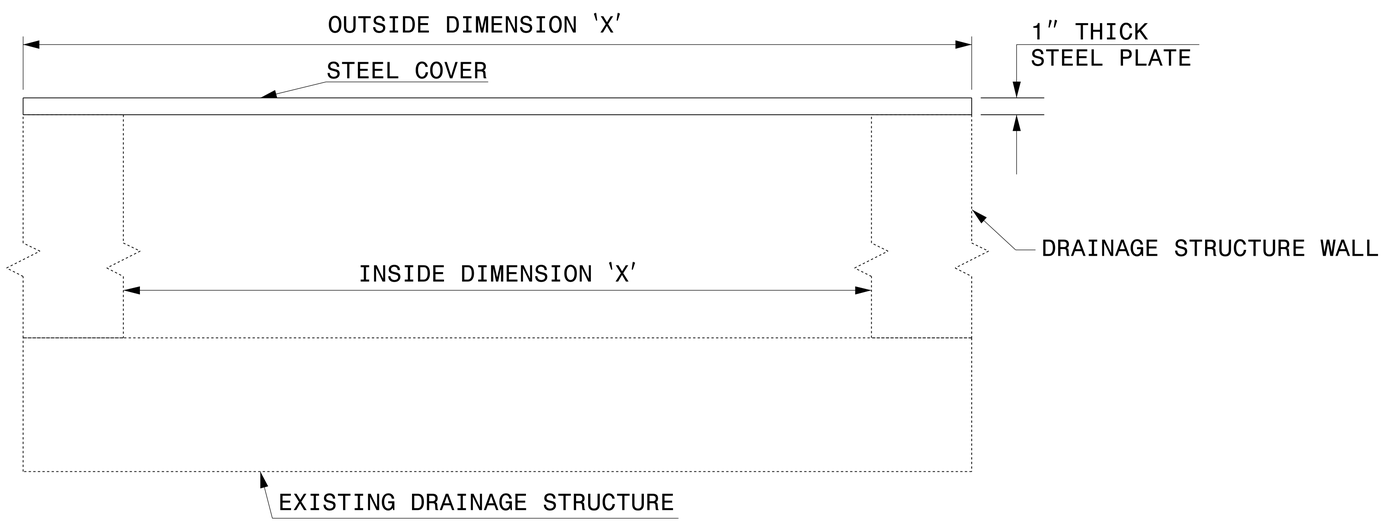

ELEVATION VIEWS

NORTH CAROLINA PROFESSIONAL ENGINEER SEAL 022966 Joel C. Howerton

DocuSigned by: Joel Howerton 873F3D17DCDC45F...

11/16/2015

CONTRACT STANDARDS AND DEVELOPMENT UNIT
Office 919-707-6950 FAX 919-250-4119

DETAIL OF TEMPORARY 1" STEEL COVER OVER DRAINAGE STRUCTURE

ORIGINAL BY: E.E. WARD DATE: 2-2-98
MODIFIED BY: DATE:
CHECKED BY: DATE:
FILE SPEC.: eric:/usr/details/metric/stand/stlcvr2.dgn

$$$$SYSTIME$$$$
$$$$TIME$$$$
$$$$DGN$$$$
$$$$USERNAME$$$$

$$$$$$SYSTIME$$$$$
$$$$$$$$$$$$$$$$DGN$$$$$$$$$$$$$$$
$$$$USERNAME$$$$

STATE OF NORTH CAROLINA
DEPT. OF TRANSPORTATION
DIVISION OF HIGHWAYS
RALEIGH, N.C.

ENGLISH DETAIL DRAWING FOR
STRUCTURE ANCHOR UNITS
GUARDRAIL ANCHOR UNIT, TYPE III FOR ATTACHMENT TO RAIL ON BRIDGE - SUB REGIONAL TIER

SHEET 2 OF 7
862d03

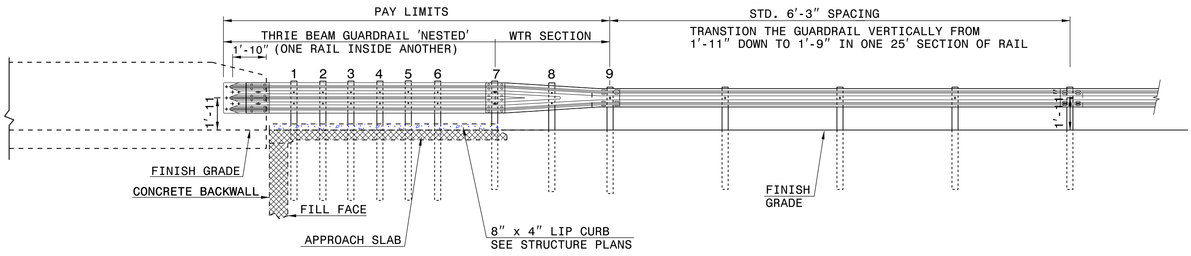

ELEVATION

NOTE:
**POST NOT REQUIRED FOR SKEW ANGLES GREATER THAN 150° OR LESS THAN 30° UNLESS OTHERWISE DIRECTED BY THE ENGINEER.
*THE DISTANCE FROM END OF BRIDGE RAIL TO CENTER LINE OF THE FIRST POST SHOULD BE 11½" IF CONCRETE BACKWALL IS NOT PRESENT.
-SHOULDER BERM GUTTER MUST BE INSTALLED TO THE LIMITS 8" x 4" LIP CURB IS SHOWN IF ANCHOR UNIT IS NOT ADJACENT TO AN APPROACH SLAB.
-MEASURE GUARDRAIL HEIGHT FROM THE TOP OF ADJACENT SURFACE (SHOULDER, BERM, OR GUTTER).
-LAP JOINTS IN THE DIRECTION OF TRAFFIC FLOW.
-SEE SHEET 5 FOR POST SECTIONS 1 THRU 9.

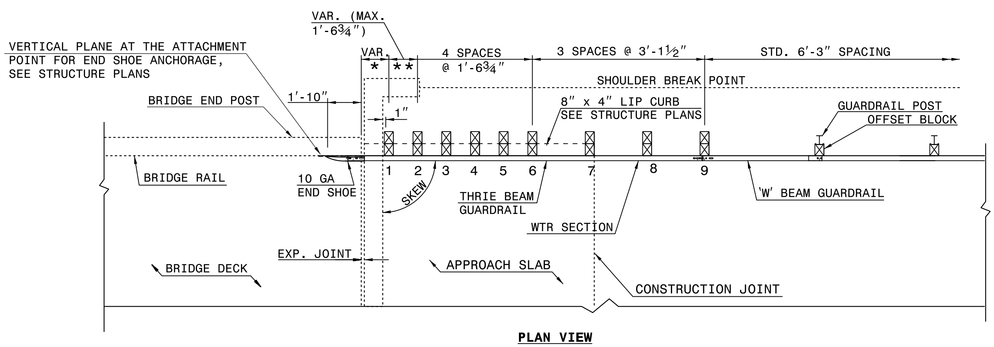

PLAN VIEW

GUARDRAIL ANCHOR UNIT, TYPE III FOR ATTACHMENT TO RAIL ON BRIDGE - SUB REGIONAL TIER

STATE OF NORTH CAROLINA
DEPT. OF TRANSPORTATION
DIVISION OF HIGHWAYS
RALEIGH, N.C.

ENGLISH DETAIL DRAWING FOR
STRUCTURE ANCHOR UNITS
GUARDRAIL ANCHOR UNIT, TYPE III FOR ATTACHMENT TO RAIL ON BRIDGE - SUB REGIONAL TIER

SHEET 2 OF 7
862d03

STATE OF NORTH CAROLINA
DEPT. OF TRANSPORTATION
DIVISION OF HIGHWAYS
RALEIGH, N.C.

ENGLISH DETAIL DRAWING FOR
STRUCTURE ANCHOR UNITS
GUARDRAIL ANCHOR UNIT, TYPE III

SHEET 3 OF 7
862d03

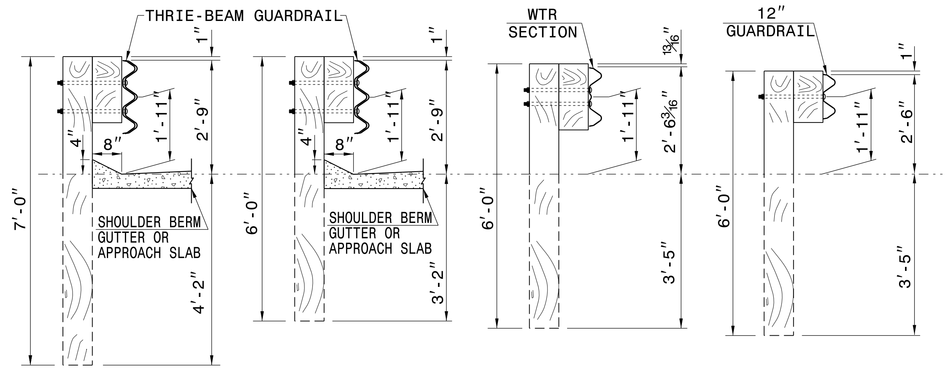

SECTION OF THRIE BEAM POSTS 1 THRU 6

SECTION OF THRIE BEAM POST 7

SECTION OF WTR BEAM POST 8

SECTION OF 'W' BEAM POST 9

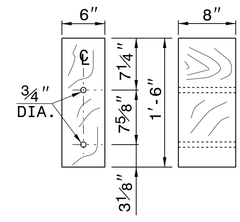

THRIE BEAM OFFSET BLOCK

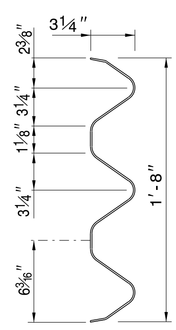

THRIE-BEAM SECTION

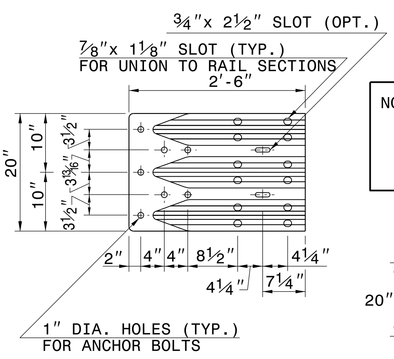

END SHOE

NOTE: THE MID POST AND OFFSET BLOCK OF THE WTR SECTION WILL REQUIRE SPECIAL BOLT HOLE DRILLING IN THE THRIE BEAM OFFSET BLOCK AND LINE POST.

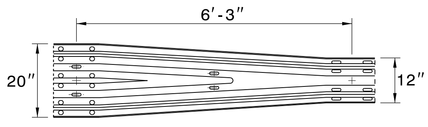

WTR SECTION
ELEVATION VIEW

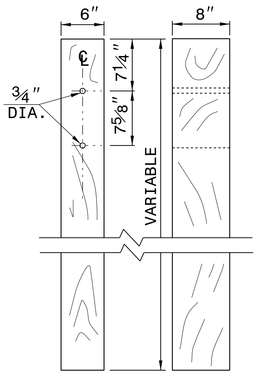

THRIE BEAM LINE POST

STATE OF NORTH CAROLINA
DEPT. OF TRANSPORTATION
DIVISION OF HIGHWAYS
RALEIGH, N.C.

ENGLISH DETAIL DRAWING FOR
STRUCTURE ANCHOR UNITS
GUARDRAIL ANCHOR UNIT, TYPE III

SHEET 3 OF 7
862d03

CONTRACT STANDARDS AND DEVELOPMENT UNIT
Office 919-707-6950 FAX 919-250-4119

SEE TITLE BLOCK

ORIGINAL BY: J. HOWERTON DATE: 06-22-12
MODIFIED BY:
MODIFIED BY: DATE:
CHECKED BY: DATE:
FILE SPEC.:

DocuSigned by: Joel Howerton
B73F3017DDDD4AF...
11/16/2015

NORTH CAROLINA PROFESSIONAL SEAL 022966 ENGINEER JOEL HOWERTON

PROJECT REFERENCE NO. U-3308
SHEET NO. 2C-20

PROJECT REFERENCE NO.	SHEET NO.
U-3308	2C-21

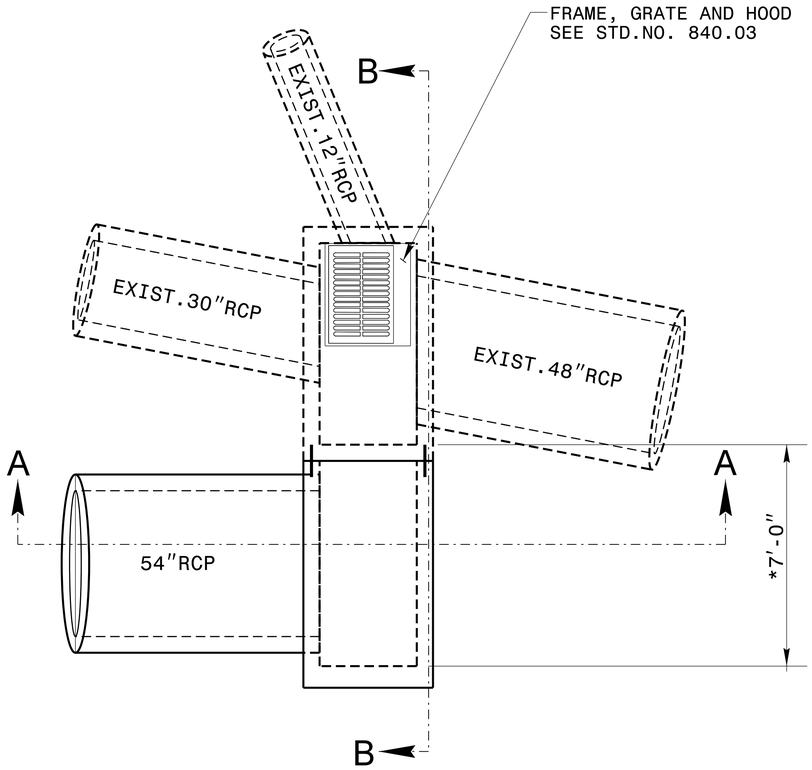

PLAN

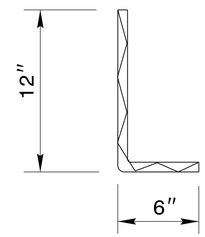

DOWEL

NOTES:

USE CLASS "B" CONCRETE THROUGHOUT.

ALL REINFORCING STEEL SHOULD BE ASTMA615-GRADE 60.

ALL REINFORCING STEEL SHOULD BE DEFORMED BARS. WHERE SPLICING OF REINFORCMENT IS NECESSARY, BARS ARE TO BE LAPPED 45 DIAMETERS. ALL DIMENSIONS RELATIVE TO REINFORCEMENT ARE TO CENTERS OF BARS.

REINFORCING STEEL TO BE CUT, BENT OR RELOCATED TO POSITION CATCH BASIN AS DIRECTED BY THE ENGINEER.

ALL EXPOSED CORNERS ARE TO BE CHAMFERED 1".

ALL MATERIAL AND WORKMANSHIP AS PER N.C.DEPARTMENT OF TRANSPORTATION STANDARD SPECIFICATIONS.

OPTIONAL CONSTRUCTION, MONOLITHIC POUR, 2" KEYWAY, OR #4 BAR DOWELS AT 12" CENTERS AS DIRECTED BY THE ENGINEER.

BILL OF MATERIAL

REINFORCING STEEL

BAR	SIZE	LENGTH	NO.	WEIGHT
H	#4	3'-8"	32	79
H1	#4	14'-3"	6	58
H2	#4	6'-8"	6	27
DOWEL (OPTION)			14	
REINF. STEEL LBS.				164
TOTAL CON./R.C. CU. YDS.				3.2
DEDUCTION FOR 1-54" RCP				-0.5
CON./R.C. CU. YDS.				2.7

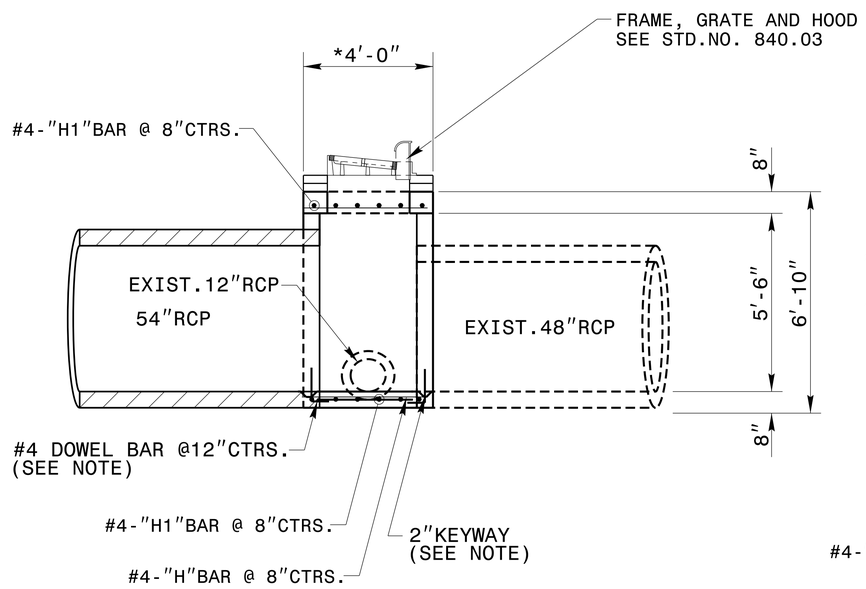

SECTION A-A

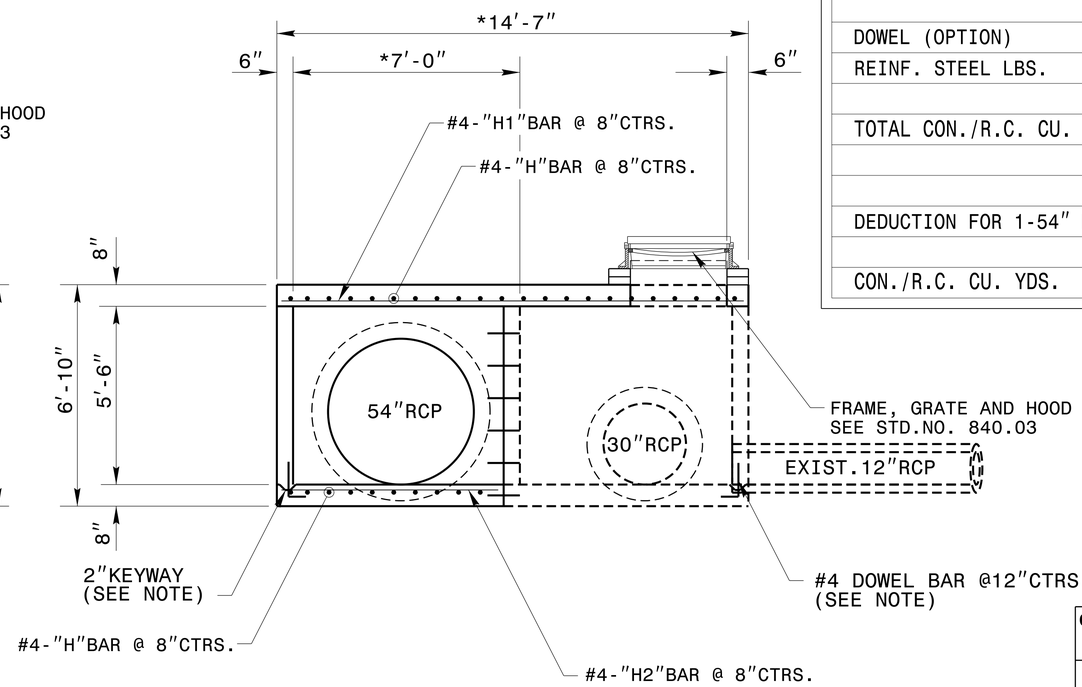

SECTION B-B

* DIMENSIONS SHOULD BE FIELD VERIFIED.
* DIMENSIONS MAY BE ADJUSTED AS DIRECTED BY THE ENGINEER.

NORTH CAROLINA PROFESSIONAL SEAL 022966 ENGINEER Joel S. Howerton

DocuSigned by: Joel Howerton 873F3D17DCDC45F... 5/17/2016

DOCUMENT NOT CONSIDERED FINAL UNLESS ALL SIGNATURES COMPLETED

CONTRACT SERVICES & DEVELOPMENT UNIT
STANDARDS AND SPECIAL DESIGN
Office 919-707-6900 FAX 919-250-4119

DETAIL OF TEMPORARY SPECIAL CATCH BASIN EXTENSION

ORIGINAL BY: _____ DATE: _____
MODIFIED BY: rnbritt DATE: 05-16-2016
CHECKED BY: _____ DATE: _____
FILE SPEC.: details\nbritt\english\urban\u3308 temp cb.dgn

$$$$SYTME$$$$
$$$$CONS$$$$
$$$$USERNAME$$$$

PROJECT REFERENCE NO.	SHEET
U-3308	2H-1

GEOENVIRONMENTAL ENGINEER

NORTH CAROLINA PROFESSIONAL SEAL 31499 ENGINEER CYRUS F. PARKER

DocuSigned by: Cyrus Parker 4/24/2015
C06492AF5E824DF...
SIGNATURE DATE

ENGINEER

SIGNATURE DATE

Detail for Temporary Containment of Contaminated Soil

Cross-Section View

NOTE:
The Contractor shall stockpile all contaminated soil excavated from a property in a location within the property boundaries of the source parcel. If the volume of contaminated material exceeds available space on site, the Contractor shall obtain a permit from the NCDENR UST Section for off-site temporary storage.

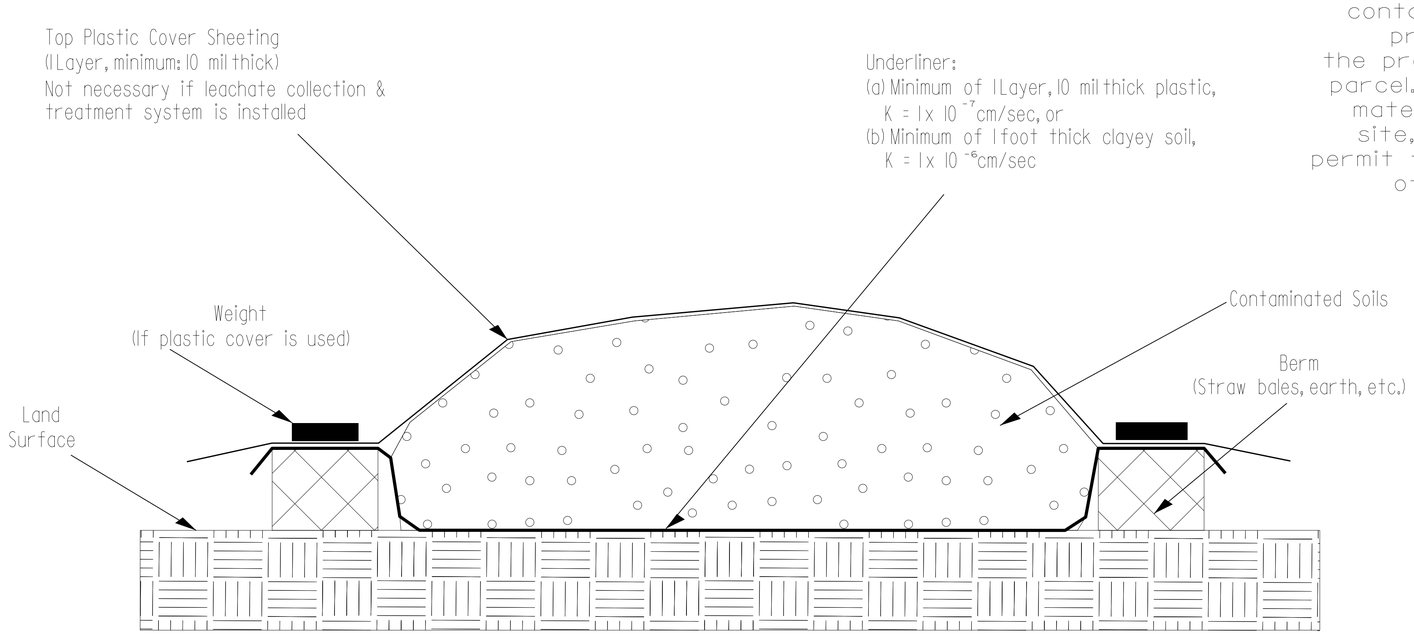

Map View

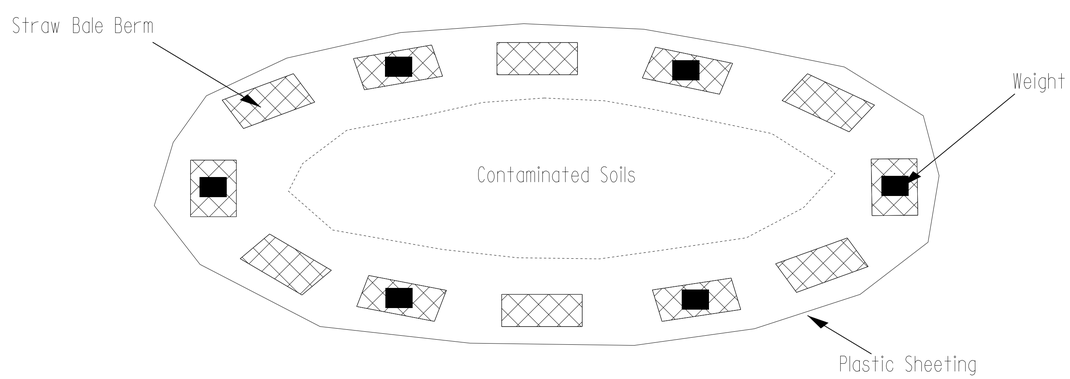

PREPARED BY:	DATE:
REVIEWED BY:	DATE:

GEOTECHNICAL ENGINEERING UNIT

STATE OF NORTH CAROLINA DEPARTMENT OF TRANSPORTATION

- ☐ EASTERN REGIONAL OFFICE
- ☐ WESTERN REGIONAL OFFICE
- ☒ CONTRACT OFFICE

STATE OF NORTH CAROLINA
DEPARTMENT OF TRANSPORTATION
RALEIGH

STOCKPILE CONTAINMENT DETAIL

REVISIONS

NO.	BY	DATE	NO.	BY	DATE
1			3		
2			4		

COMPUTED BY: MRL DATE: 4/7/2015
CHECKED BY: AKW DATE: 4/7/2015

PROJECT REFERENCE NO.	SHEET NO.
U-3308	3B-1

EARTHWORK SUMMARY

IN CUBIC YARDS

* PAVEMENT STRUCTURE VOLUME 13,550 cu yds
** FOR ALTERNATE PAVEMENT DESIGN 9,100 cu yds

LOCATION	UNCLASSIFIED EXCAVATION	UNDERCUT	EMBT+%	BORROW	WASTE
SUMMARY #1 (LEFT SIDE)					
Sta. 13+50.00 to 15+55.95 (Bridge) –LALT–	74		679	605	
Sta. 11+00.00 to 14+80.05 –R1–	203		1285	1082	
SUMMARY #1 TOTAL	277		1964	1687	
SUMMARY #2 (LEFT SIDE)					
17+36.20 (Bridge) to 46+50.00 –LALT–	21009		3332		17677
Sta. 10+31.00 to 13+60.00 –R3–	83		1255	1172	
Sta. 9+99.63 to 12+06.62 –Y3–	149		185	36	
Sta. 10+00.00 to 12+68.53 –Y3A–	142		170	28	
Sta. 12+00.00 to 16+27.05 (Bridge) –Y–	153		598	445	
Sta. 11+00.00 to 12+40.92 –Y1–	141		25		116
Sta. 10+16.47 to 12+45.00 –Y4–	33		77	44	
Sta. 9+89.71 to 11+55.00 –Y6–	378		16		362
Sta. 9+93.63 to 13+89.00 –Y8–	389		41		348
Sta. 10+10.69 to 14+00.00 –Y10–	243		72		171
Sta. 10+29.77 to 14+20.00 –Y12–	85		94	9	
SUMMARY #2 TOTAL	22805		5864	1733	18674
SUMMARY #3 (LEFT SIDE)					
Sta. 46+50.00 to 66+10.00 –LALT–	6023		965		5058
Sta. 10+39.75 to 11+40.00 –Y14–	274				274
Sta. 10+36.07 to 11+85.00 –Y16–	244		5		239
Sta. 10+20.00 to 13+49.29 –Y18–(Intersection)	2267		48		2219
Sta. 10+25.00 to 10+84.92 –Y20–	66		10		56
Sta. 12+55.00 to 13+80.42 –Y22–(Intersection)	61		40		21
SUMMARY #3 TOTAL	8935		1066		7868
SUMMARY #4 (RIGHT SIDE)					
Sta. 13+50.00 to 15+55+95 –LALT–(Bridge)	54		578	524	
Sta. 10+60.37 to 11+00.00 –R2–	12		16	4	
SUMMARY #4 TOTAL	66		594	528	

LOCATION	UNCLASSIFIED EXCAVATION	UNDERCUT	EMBT+%	BORROW	WASTE
SUMMARY #5 (RIGHT SIDE)					
Sta. 17+36.20 (Bridge) to 46+50.00 –LALT–	10309		775		9534
Sta. 10+52.68 to 12+30.00 –R4–	7		241	234	
Sta. 10+31.43 to 11+50.00 –R5–	157				157
Sta. 17+84.55 (Bridge) to 24+50.00 –Y–	511		4712	4201	
Sta. 10+49.52 to 11+00.00 –Y2–	69		6		63
Sta. 10+52.26 to 11+55.00 –Y5–	404		2		402
Sta. 10+76.58 to 12+50.00 –Y7–	466		2		464
Sta. 10+72.37 to 11+35.00 –Y9–	75		4		71
Sta. 10+55.37 to 10+90.00 –Y11–	18		2		16
Sta. 10+62.00 to 11+22.00 –Y13–	153		4		149
SUMMARY #5 TOTAL	12169		5749	4435	10,855
SUMMARY #6 (RIGHT SIDE)					
Sta. 46+50.00 to 66+10.00 –LALT–	3259		1405		1854
Sta. 10+27.50 to 16+20.00 –Y15–	327		894	567	
Sta. 10+17.00 to 10+80.00 –Y15A–	47		7		40
Sta. 10+29.99 to 11+45.00 –Y17–	45		154	109	
Sta. 14+15.34(Intersect.) to 17+83.00 –Y18–	207		203		4
Sta. 10+33.05 to 11+25.00 –Y21–	119		5		114
Sta. 14+46.43(Intersect.) to 18+40.00 –Y22–	176		72		104
SUMMARY #6 TOTAL	4180		2739	675	2116
SUMMARY #7					
DETOUR RAIL–LINE	2882		101		2781
FINAL RAIL–LINE	5873		50		5823
SUMMARY #7 TOTAL	8755		151		8604
SUMMARY TOTALS	57,187		18,127	9058	48,117
WASTE IN LIEU OF BORROW				–9058	–9058
GRAND TOTAL	57,187		18,127		39,059
SAY	60000				
EARTHWORK TOTALS FOR ALTERNATE PAVT DESIGN					
SUMMARY TOTAL	57,187		18,127	9058	48,117
ADJ. FOR ALT. PAV'T DESIGN	–3350		2574	5924	
WASTE IN LIEU OF BORROW				–14,982	–14,982
PROJECT TOTALS	53,837		20,701		33,135
TOTAL	53,837				
SAY	55000				

CONTINGENCY UNDERCUT = 1,950 CY
CONTINGENCY SHALLOW UNDERCUT = 1000 CY
SHALLOW UNDERCUT BY STATION = 450 CY
TOTAL SHALLOW UNDERCUT = 1450 CY
GEOTEXTILE FOR SOIL STABILIZATION = 5,100 SY
SELECT GRANULAR MATERIAL = 750 CY
CLASS IV SUBGRADE STABILIZATION = 2,800 TONS

NOTE: Earthwork quantities are calculated by the Roadway Design Unit. These earthwork quantities are based in part on subsurface data provided by the Geotechnical Engineering Unit.

Note: "Quantities are approximate only. The Resident Engineer will re–cross–section the work accurately when the project is staked out. These cross–section notes will be used in computing the final quantities for which the contractor will be paid."

5/9/06
20-MAY-2015 14:55
R:\Roadway\Proj\u3308_rdy_sum.dgn
$$$$USER$$$$

9/16/99

COMPUTED BY: MRL DATE: 4/7/2015
CHECKED BY: AKW DATE: 4/7/2015

PROJECT REFERENCE NO.	SHEET NO.
U-3308	3B-2

STATE OF NORTH CAROLINA
DIVISION OF HIGHWAYS

"N" = DISTANCE FROM EDGE OF LANE TO FACE OF GUARDRAIL.
TOTAL SHOULDER WIDTH = DISTANCE FROM EDGE OF TRAVEL LANE TO SHOULDER BREAK POINT.
FLARE LENGTH = DISTANCE FROM LAST SECTION OF PARALLEL GUARDRAIL TO END OF GUARDRAIL.
W = TOTAL WIDTH OF FLARE FROM BEGINNING OF TAPER TO END OF GUARDRAIL.
G = GATING IMPACT ATTENUATOR TYPE 350
NG = NON-GATING IMPACT ATTENUATOR TYPE 350

GUARDRAIL SUMMARY

SURVEY LINE	BEG. STA.	END STA.	LOCATION				WARRANT POINT		"N" DIST. FROM E.O.L.	TOTAL SHOULDER WIDTH	FLARE LENGTH		W		ANCHORS									IMPACT ATTENUATOR TYPE 350			REMOVE EXISTING GUARDRAIL	STRAIGHT THRIE BEAM	WTR SECTION	REMARKS
																								PERMITTED						
				STRAIGHT	SHOP CURVED	SHOP CURVED THRIE BEAM	APPROACH END	TRAILING END			APPROACH END	TRAILING END	APPROACH END	TRAILING END	TYPE 350 TL-2	TYPE III	CAT-1	AT-1	TYPE III MODIFIED	TYPE 350 TL-3				NO.	G	NG				
-R1-	11+00.00	14+31.25	RT	331.25			11+00.00		2'	6' BERM	27'		0.54'				1										365'			TIE TO EXIST GUARDRAIL
-LALT-	14+76.62	15+58.52	LT	81.90				15+58.52	7.5'	10' BERM					1	1														
-LALT-	14+70.65	15+52.65	RT	82.00'			15+52.65		7.5'	10' BERM					1	1											112'			
-LALT-	17+39.23	13+60.00 -R3-	LT	391.50'		50'	17+39.23		7.5'	10' BERM							1		1								529'	50'	1	THRIE BEAM- SEE SHEET 2C-16 FOR THRIE BEAM TRANSITION
-R3-	11+57.00	13+60.00	RT	203.00'			11+57.00		2'	6' BERM					1		1													
-LALT-	21+89.17	24+75.94	RT	286.77'			21+89.17		2'	10' BERM					1		1													
-LALT-	23+79.28	26+70.77	LT	291.49'			26+70.77		2'	10' BERM					1		1													
-LALT-	22+52.00		C/L																					1		X				
-LALT-	24+87.00		C/L																					1		X				
-Y-	15+24.56	16+23.90	LT	99.34'				16+23.90	2'	8' BERM					1	1														
-Y-	12+22.90 -Y3A-	16+31.01	RT	143.23'	50'		16+31.01		7.5'	8' BERM						1		1												
-Y-	17+88.51	18+71.98	RT	83.47'				17+88.51	7.5'	8' BERM	25'		0.5'		1	1														
-Y-	17+81.40	19+59.17	LT	177.77'			17+81.40		2'	8' BERM	118.84'		2.38'		1	1														
-YA-	11+04.35	15+56.85	LT	452.5'			13+05.22		6'																		452.5'			
-YA-	11+06.19	15+58.69	RT	452.5			13+05.22		6'																		452.5			
		SUBTOTAL		3076.72'	50'	50'									8	6	5	1	1					2				50'	1	
DEDUCTION FOR ANCHORS																														
8 - TYPE 350 TL-2 @ 25' EACH				-200'																										
6 - TYPE III @ 18.75' EACH				-112.5'																										
5 - CAT-1 @ 6.25' EACH				-31.25'																										
1 - AT-1 @ 6.25' EACH				-6.25'																										
1 - TYPE III MODIFIED @ 18.75' EACH																												-18.75		
		TOTAL		2726.72'	50'	50'									8	6	5	1	1					2			1911	31.25'	1	
		SAY		2737.50'	50'	50'																					1920	37.5'		
ADDITIONAL GUARDRAIL POSTS - 10 EACH																														
	TEMPORARY GUARDRAIL																													SEE TMP PLANS
-YA-	11+04.35	15+56.85	LT	452.5'					6'		50		1				2			2										
-YA-	11+06.19	15+58.69	RT	452.5					6'		50		1				2			2										
	DEDUCTION FOR ANCHORS																													
	4 - TYPE 350 TL-3 @ 50' EACH			-200'																										
	4 - CAT-1 @ 6.25' EACH			-25'																										
20' OPENING BETWEEN TL-3 AND CAT-1				-80'																										
		TOTAL		600'													4			4										
		SAY		600'													4			4										

COMPUTED BY: MRL DATE: 4/7/2015
CHECKED BY: AKW DATE: 4/7/2015

PROJECT REFERENCE NO.	SHEET NO.
U-3308	3B-3

SUMMARY OF EXISTING ASPHALT PAVEMENT REMOVAL

IN SQUARE YARDS

SURVEY LINE	STATION	STATION	LOCATION	ASPHALT REMOVAL
–LALT–	12+00	14+24	Lt	43
–LALT–	12+00	14+33	Rt	70
–LALT–	15+00	15+50	C/L	293
–LALT–	17+41	66+10	C/L	24,860
–Y3–	10+65	12+20	C/L	525
–Y3A–	10+24	12+41	Rt	46
–Y–	15+00	16+72	C/L	678
–Y–	18+21	20+53	C/L	923
–Y–	20+53	25+00	Lt.	167
–Y1–	11+00	12+21	C/L	435
–Y4–	10+10	11+00	C/L	400
–Y5–	10+98	11+55	C/L	190
–Y6–	10+23	11+55	C/L	351
–Y7–	10+96	12+50	C/L	478
–Y8–	10+38	12+55	C/L	409
–Y8–	12+55	13+90	Rt	56
–Y9–	10+96	11+25	C/L	77
–Y10–	10+45	10+90	C/L	121
–Y10–	10+90	14+06	Rt/Lt	340
–Y14–	10+70	11+40	C/L	261
–Y15–	10+31	16+20	C/L	2,129
–Y17–	10+44	11+45	C/L	309
–Y18–	10+20	13+16	C/L	1,176
–Y18–	14+46	15+25	C/L	280
–Y21–	10+57	11+25	C/L	210
–Y22–	15+12	16+00	C/L	291
–R5–	10+42	11+50	C/L	268
ASPHALT PVMT. REMOVAL PER TMP PLANS				6600
			TOTAL	41988
			SAY	42000

SUMMARY OF EXISTING CONCRETE PAVEMENT REMOVAL

IN SQUARE YARDS

SURVEY LINE	STATION	STATION	LOCATION	YD^2
–R1–	11+58	13+70	Rt	44
–R3–	10+38	13+57	Rt	368
–R4–	11+22	11+38	Rt	33
–R5–	11+11	11+50	C/L	69
			TOTAL:	514
			SAY:	520

5/14/99
14-MAY-2015 12:31
R:\Roadway\Proj\u3308_rdy_sum.dgn
$$$$USERNAME$$$$

RD266193

COMPUTED BY: L. JAH DATE: 01/12/2015

CHECKED BY: A.K. WHITE DATE: 11/16/2015

PROJECT NO.	SHEET NO.
U-3308	3D-1

NORTH CAROLINA DEPARTMENT OF TRANSPORTATION
DIVISION OF HIGHWAYS

Note: Invert Elevations indicated are for Bid Purposes only and shall not be used for project construction stakeout.
See "Standard Specifications For Roads and Structures, Section 300-5".

LIST OF PIPES, ENDWALLS, ETC. (FOR PIPES 48 INCHES & UNDER)

ABBREVIATIONS
- C.A.A. CORRUGATED ALUMINIUM ALLOY
- C.B. CATCH BASIN
- C.S. CORRUGATED STEEL
- D.I. DROP INLET
- G.D.I. GRATED DROP INLET
- H.D.P.E. HIGH DENSITY POLYETHYLENE
- J.B. JUNCTION BOX
- M.H. MANHOLE
- N.S. NARROW SLOT
- P.V.C. POLYVINYL CHLORIDE
- R.C. REINFORCED CONCRETE
- T.B.D.I. TRAFFIC BEARING DROP INLET
- T.B.J.B. TRAFFIC BEARING JUNCTION BOX
- W.S. WIDE SLOT

Size / Thickness or Gauge are given in the column heads. Quantities for drainage structures — NOTE: TOTAL LIN. FT. FOR PAY QUANTITY SHALL BE A + (1.3 X B).

LINE & STATION	OFFSET		STRUCTURE NUMBER FROM	TO	TOP ELEVATION FT.	INVERT ELEVATION FT.	INVERT ELEVATION FT.	MINIMUM REQUIRED SLOPE %	Drainage Pipe (RCP, CSP, CAAP, HDPE, or PVC) 15	18	DO NOT USE RCP	DO NOT USE CSP	DO NOT USE CAAP	DO NOT USE HDPE	DO NOT USE PVC	C. S. PIPE 12 .064	15 .064	18 .064	R. C. PIPE CLASS IV 15	18	24	30	36	42	48	R. C. PIPE CLASS V 12	15	18	24	30	48	BIT COAT CORRUGATED METAL PIPE 36	ENDWALLS STD. 838.01 OR STD. 838.11 (UNLESS NOTED OTHERWISE) CY	REINFORCED ENDWALLS CY	DRAINAGE STRUCTURE MASONRY CY	0' THRU 5' EACH	A 5' THRU 10' LIN. FT.	B 10' AND ABOVE LIN. FT.	C.B. STD. 840.01 OR STD. 840.02	FRAME, GRATES, AND HOOD STD. 840.03 GRATE TYPE E	F	G	CONCRETE TRANSITIONAL SECTION D.I. STD. 852.04 OR STD. 852.06	OPEN THROAT C.B. STD. 840.04 OR STD. 840.05	D.I. STD. 840.14 OR STD. 840.15	D.I. FRAME AND GRATES STD. 840.16	T.B.D.I. 840.36	T.B.D.I. FRAME AND GRATE 840.37	DRIVEWAY D.I. STD. 840.30	FRAME W/ GRATE FOR DRIVEWAY STD. 840.30	J.B. STD. 840.31 OR STD. 840.32	T.B.J.B. STD. 840.34	M.H. FRAME AND COVER STD. 840.54	CONVERT EXISTING C.B. TO J.B.	CONVERT EXISTING D.I. TO J.B.	CS PIPE ELBOWS NO. & SIZE	FLOWABLE FILL CY	CONCRETE COLLARS CL. "B" STD. 840.72 CY	CONCRETE AND BRICK PIPE PLUG STD. 840.71 CY	PIPE REMOVAL LIN. FT.	REMARKS
L 61+62	372	LT	0128		344.5																																																								EXISTING CB TO BE RETAINED
R1 11+00	4	LT	0401		394.8																															1																1	1								
			0401	0403		393.2	392.5												140																																										
R1 12+40	0	CL	0402		399.0																															1	1.6															1	1								
R1 12+40	19	LT	0403		400.2																															1	2.7		1		1																				
			0403	0402		392.5	392.4												20																																										
LALT 14+70	33	LT	0404		407.3																															1			1		1																				
			0404	0405		404.1	403.6												16																																										
LALT 14+64	19	LT	0405		406.7																															1																1	1								
LALT 14+81	44	RT	0406		407.6																															1			1			1																			
			0406	0407		404.5	403.7												12																																										
LALT 14+78	31	RT	0407		406.9																															1																1	1								
LALT 19+89	34	RT	0409		402.9																															1			1		1																				
			0409	0416		399.8	399.3												76																																										
Y3 10+60	20	RT	0411		404.2																															1			1		1																				
			0411	0413															44																																										
Y3 10+79	36	LT	0412		404.3																															1									1	1																
			0412	0413		402.0	400.3												16																																										
Y3 10+80	20	LT	0413		403.5																															1			1			1																			
			0413	0414		400.3	396.6												88																																										
Y3 11+68	20	LT	0414		399.7																															1			1	1																					
			0414	0415		396.6	396.4												40																																										
Y3 11+68	20	RT	0415		401.2																															1			1	1																					
			0415	0416		396.4	396.3												48																																										
LALT 19+95	45	LT	0416		402.5																															1	1.4		1			1																			
			0416	0418		396.0	395.7													112																																									
LALT 18+13	33	LT	0417		409.9																															1			1			1																			
			0417	0418		406.7	403.9												68																																										
LALT 18+80	50	LT	0418		407.1																															1	5.0	1.3	1			1																			
LALT 18+72	77	LT	0419		406.2																																																1	1							
LALT 19+00	91	LT	0420		397.0																															1								1																	
			0420	0421		393.8	392.3												12																																										
LALT 19+00	79	LT	0421		395.4																																																1		1						
R3 11+05	12	RT	0422		407.8																															1			1	1																					
			0422	0423		404.7	398.0											56																																											
R1 13+90	19	RT	0425		403.5																															1			1			1																			
			0425	0426		400.5	400.4												40																																										
R1 13+75	18	LT	0426		403.6																															1			1		1																				
			0426	0403		400.4	397.1												132																																										
LALT 25+03	52	RT	0501		395.8																															1									1	1																
			0501	0509		393.5	389.1												16																																										
LALT 22+85	35	LT	0502		394.5																															1			1			1																			
			0502	0503		391.3	389.9												100																																										
LALT 23+85	35	LT	0503		393.0																															1			1			1																			
			0503	0517		389.9	389.2	0.5											88																																										
LALT 22+75	35	RT	0504		394.7																															1			1		1																				
			0504	0506		391.5	390.3												76																																										
LALT 23+40	80	RT	0505		399.8																															1								1																	
			0505	0506		396.8	390.3											48																																											
LALT 23+50	35	RT	0506		393.5																															1			1		1																				
SHEET TOTALS																	104		1032	112																26	10.7	1.3	18	3	7	8		2	2	2						4	6	1	1						

RD266193

COMPUTED BY:	L. JAH	DATE:	01/12/2015
CHECKED BY:	A.K. WHITE	DATE:	11/16/2015

PROJECT NO.	SHEET NO.
U-3308	3D-2

NORTH CAROLINA DEPARTMENT OF TRANSPORTATION
DIVISION OF HIGHWAYS

Note: Invert Elevations indicated are for Bid Purposes only and shall not be used for project construction stakeout.
See "Standard Specifications For Roads and Structures, Section 300-5".

LIST OF PIPES, ENDWALLS, ETC. (FOR PIPES 48 INCHES & UNDER)

LINE & STATION	OFFSET		STRUCTURE NUMBER FROM	TO	TOP ELEVATION FT.	INVERT ELEVATION FT.	INVERT ELEVATION FT.	MINIMUM REQUIRED SLOPE %
			0506	0516		390.3	389.2	0.4
LALT 25+15	35	LT	0507		392.2			
			0507	0513		388.8	388.7	
LALT 26+35	35	LT	0508		392.4			
			0508	0608		387.0	379.1	0.5
LALT 25+03	35	RT	0509		392.2			
			0509	0510		388.3	388.2	
LALT 25+44	35	RT	0510		392.2			
			0510	0512		388.2	388.0	
LALT 26+27	44	RT	0511		390.2			
			0511	0512		388.0	387.9	
LALT 26+20	35	RT	0512		392.3			
			0512	0508		387.2	387.0	
LALT 25+44	35	LT	0513		392.2			
			0513	0508		388.7	388.4	
Y 15+94	22	RT	0514		416.5			
			0514	0515		413.4	413.2	
Y 15+82	22	LT	0515		416.4			
			0515	1505		413.2	412.3	
LALT 24+65	35	RT	0516		392.4			
			0516	0509		389.0	388.8	
LALT 24+75	35	LT	0517		392.3			
			0517	0507		388.9	388.8	
LALT 29+50	49	RT	0601		390.2			
			0601	0602		387.9	385.1	
LALT 29+56	36	RT	0602		388.2			
			0602	0604		385.1	379.6	
LALT 31+04	46	RT	0603		382.8			
			0603	0604		380.6	379.6	
LALT 31+03	35	RT	0604		382.7			
			0604	0620		379.6	376.3	
Y2 11+00	18	RT	0605		382.1			
			0605	0606		378.9	378.1	
Y2 10+77	20	LT	0606		381.3			
			0606	0620		378.1	376.3	
LALT 32+47	47	RT	0607		378.5			
			0607	0621		376.2	374.7	
LALT 31+05	35	LT	0608		382.9			
			0608	0609		378.8	375.5	0.6
LALT 31+99	35	LT	0609		379.4			
			0609	0616		374.5	373.0	0.4
Y1 11+12	19	RT	0610		382.7			
			0610	0611		378.7	378.5	
Y1 11+11	18	LT	0611		382.4			
			0611	0622		378.5	376.7	0.4
Y1 12+06	18	LT	0612		380.2			
			0612	0609		375.8	375.0	0.5
Y1 11+97	53	RT	0613		379.6			
			0613	0614		377.3	377.2	
Y1 11+92	28	RT	0614		381.0			

SIZE / THICKNESS OR GAUGE — pipe quantities:

FROM	TO	Drainage Pipe (RCP, CSP, CAAP, HDPE, or PVC) 15	18	DO NOT USE RCP	DO NOT USE CSP	DO NOT USE CAAP	DO NOT USE HDPE	DO NOT USE PVC	C. S. PIPE 12 (.064)	15 (.064)	18 (.064)	R. C. PIPE CLASS IV 15	18	24	30	36	42	48	R. C. PIPE CLASS V 12	15	18	24	30	48	BIT COAT CORRUGATED METAL PIPE 36
0506	0516											116													
0507	0513												28												
0508	0608													468											
0509	0510													40											
0510	0512													76											
0511	0512											12													
0512	0508													68											
0513	0508												92												
0514	0515											44													
0515	1505											128													
0516	0509											36													
0517	0507											40													
0601	0602											16													
0602	0604											148													
0603	0604											12													
0604	0620											92													
0605	0606											44													
0606	0620											40													
0607	0621											12													
0608	0609													92											
0609	0616															48									
0610	0611													36											
0611	0622													64											
0612	0609														44										
0613	0614	24																							
SHEET TOTALS		24										740	120	844	44	48									

Structures:

FROM	ENDWALLS STD. 838.01 OR STD. 838.11 (UNLESS NOTED OTHERWISE) CY	REINFORCED ENDWALLS CY	DRAINAGE STRUCTURE MASONRY CY	QUANTITIES FOR DRAINAGE STRUCTURES 0' THRU 5' EACH	A 5' THRU 10' LIN. FT.	B 10' AND ABOVE LIN. FT.	C.B. STD. 840.01 OR STD. 840.02	FRAME, GRATES, AND HOOD STD. 840.03 GRATE TYPE E	F	G	D.I. STD. 852.04 OR STD. 852.06 (CONCRETE TRANSITIONAL SECTION)	OPEN THROAT C.B. STD. 840.04 OR STD. 840.05	D.I. STD. 840.14 OR STD. 840.15	D.I. FRAME AND GRATES STD. 840.16	T.B.D.I. 840.36	T.B.D.I. FRAME AND GRATE 840.37	DRIVEWAY D.I. STD. 840.30	FRAME W/ GRATE FOR DRIVEWAY STD. 840.30	J.B. STD. 840.31 OR STD. 840.32	T.B.J.B. STD. 840.34	M.H. FRAME AND COVER STD. 840.54	CONVERT EXISTING C.B. TO J.B.	CONVERT EXISTING D.I. TO J.B.	CS PIPE ELBOWS NO. & SIZE	FLOWABLE FILL CY	CONCRETE COLLARS CL. "B" STD. 840.72 CY	CONCRETE AND BRICK PIPE PLUG STD. 840.71 CY	PIPE REMOVAL LIN. FT.	REMARKS
0507				1			1			1																			
0508				1	0.4		1		1																				
0509				1			1		1																				
0510				1			1	1																					
0511				1													1	36											
0512				1	0.1		1			1																			
0513				1			1	1																					
0514				1			1		1																				
0515				1			1			1																			
0516				1			1		1																				
0517				1			1			1																			
0601				1									1	1															
0602				1			1		1																				
0603				1									1	1															
0604				1			1		1																				
0605				1			1			1																			
0606				1			1		1																				
0607				1									1	1															
0608				1			1			1																			
0609				1			1			1																			
0610				1			1		1																				
0611				1			1			1																			
0612				1			1	1																					
0613				1									1	1															
0614				1															1		1								
SHEET TOTALS				25	0.5		19	3	8	8			4	4			1	36	1		1								

NOTE: TOTAL LIN. FT. FOR PAY QUANTITY SHALL BE A + (1.3 X B)

ABBREVIATIONS

C.A.A.	CORRUGATED ALUMINIUM ALLOY
C.B.	CATCH BASIN
C.S.	CORRUGATED STEEL
D.I.	DROP INLET
G.D.I.	GRATED DROP INLET
H.D.P.E.	HIGH DENSITY POLYETHYLENE
J.B.	JUNCTION BOX
M.H.	MANHOLE
N.S.	NARROW SLOT
P.V.C.	POLYVINYL CHLORIDE
R.C.	REINFORCED CONCRETE
T.B.D.I.	TRAFFIC BEARING DROP INLET
T.B.J.B.	TRAFFIC BEARING JUNCTION BOX
W.S.	WIDE SLOT

RD266193

COMPUTED BY:	L. JAH	DATE:	01/12/2015
CHECKED BY:	A.K. WHITE	DATE:	11/16/2015

PROJECT NO.	SHEET NO.
U-3308	3D-3

NORTH CAROLINA DEPARTMENT OF TRANSPORTATION
DIVISION OF HIGHWAYS

Note: Invert Elevations indicated are for Bid Purposes only and shall not be used for project construction stakeout.
See "Standard Specifications For Roads and Structures, Section 300-5".

LIST OF PIPES, ENDWALLS, ETC. (FOR PIPES 48 INCHES & UNDER)

LINE & STATION	OFFSET	STRUCTURE NUMBER FROM	STRUCTURE NUMBER TO	TOP ELEVATION FT.	INVERT ELEVATION FT.	INVERT ELEVATION FT.	MINIMUM REQUIRED SLOPE %	Drainage Pipe (RCP, CSP, CAAP, HDPE, or PVC) 15	Drainage Pipe 18	DO NOT USE RCP	DO NOT USE CSP	DO NOT USE CAAP	DO NOT USE HDPE	DO NOT USE PVC	C. S. PIPE 12 (.064)	C. S. PIPE 15 (.064)	C. S. PIPE 18 (.064)	R. C. PIPE CLASS IV 15	R. C. PIPE CLASS IV 18	R. C. PIPE CLASS IV 24	R. C. PIPE CLASS IV 30	R. C. PIPE CLASS IV 36	R. C. PIPE CLASS IV 42	R. C. PIPE CLASS IV 48	R. C. PIPE CLASS V 12	R. C. PIPE CLASS V 15	R. C. PIPE CLASS V 18	R. C. PIPE CLASS V 24	R. C. PIPE CLASS V 30	R. C. PIPE CLASS V 48	BIT COAT CORRUGATED METAL PIPE 36	ENDWALLS STD. 838.01 OR STD. 838.11 (UNLESS NOTED OTHERWISE) CY	REINFORCED ENDWALLS CY	DRAINAGE STRUCTURE MASONRY CY	QUANTITIES FOR DRAINAGE STRUCTURES (NOTE: TOTAL LIN. FT. FOR PAY QUANTITY SHALL BE A + (1.3 X B)) 0' THRU 5' EACH	A 5' THRU 10' LIN. FT.	B 10' AND ABOVE LIN. FT.	C.B. STD. 840.01 OR STD. 840.02	FRAME, GRATES, AND HOOD STD. 840.03 GRATE TYPE E	F	G	CONCRETE TRANSITIONAL SECTION D.I. STD. 852.04 OR STD. 852.06	OPEN THROAT C.B. STD. 840.04 OR STD. 840.05	D.I. STD. 840.14 OR STD. 840.15	D.I. FRAME AND GRATES STD. 840.16	T.B.D.I. 840.36	T.B.D.I. FRAME AND GRATE 840.37	DRIVEWAY D.I. STD. 840.30	FRAME W/ GRATE FOR DRIVEWAY STD. 840.30	J.B. STD. 840.31 OR STD. 840.32	T.B.J.B. STD. 840.34	M.H. FRAME AND COVER STD. 840.54	CONVERT EXISTING C.B. TO J.B.	CONVERT EXISTING D.I. TO J.B.	CS PIPE ELBOWS NO. & SIZE	FLOWABLE FILL CY	CONCRETE COLLARS CL. "B" STD. 840.72 CY	CONCRETE AND BRICK PIPE PLUG STD. 840.71 CY	PIPE REMOVAL LIN. FT.	REMARKS
		0614	0612		376.0	375.8																	48																																							
Y1 12+18	92 LT	0615		375.0																															1									1	1															
		0615	0616		372.7	372.7		20																																																				
LALT 32+48	35 LT	0616		377.9																															1	2.0		1			1																			
		0616	0702		370.9	370.4	0.4															116																																						
LALT 31+05	5 LT	0617		382.8																															1							1		1	1															
		0617	0608		379.6	379.5												28																																										
LALT 31+98	35 RT	0620		379.4																															1			1		1																				
		0620	0621		376.3	374.7	0.6											48																																										
LALT 32+48	35 RT	0621		377.9																															1			1		1																				
		0621	0724		374.7	372.5	1.0											112																																										
Y1 11+75	19 LT	0622		380.6																															1			1			1																			
		0622	0612		376.7	376.3	0.4													32																																								
LALT 33+65	60 LT	0701		372.6																															1									1	1															
		0701	0702		370.3	370.2		24																																																				
LALT 33+65	35 LT	0702		375.7																															1	2.7		1			1																			
		0702	0722		368.0	367.8																	48																																					
LALT 34+60	75 LT	0703		371.0																															1									1	1															
		0703	0704		368.7	367.5												40																																										
LALT 35+00	75 LT	0704		369.7																															1									1	1															
		0704	0705		367.5	367.4												40																																										
LALT 35+04	35 LT	0705		376.1																															1	5.0	0.9	1			1																			
		0705	0714		365.1	364.7																	116																																					
LALT 34+60	50 RT	0706		375.0																															1									1	1															
		0706	0707		372.8	372.6												36																																										
LALT 35+00	50 RT	0707		374.9																															1									1	1															
		0707	0708		372.6	371.5												16																																										
LALT 35+00	35 RT	0708		374.7																															1			1		1																				
		0708	0712		370.7	369.7	0.3													96																																								
Y5 10+66	17 LT	0709		372.0																															1			1	1																					
		0709	0727		368.9	368.6												20																																										
Y5 10+85	20 RT	0710		372.4																															1			1			1																			
		0710	0709		369.3	368.9												40																																										
LALT 35+96	49 RT	0711		374.4																															1									1	1															
		0711	0712		372.2	370.5												12																																										
LALT 35+97	35 RT	0712		373.7																															1			1		1																				
		0712	0727		369.7	367.9	0.5													76																																								
LALT 36+21	52 LT	0713		373.9																															1									1	1															
		0713	0714		371.7	370.1												20																																										
LALT 36+18	35 LT	0714		373.3																															1	3.6		1			1																			
		0714	0726		364.7	364.1																	112																																					
Y4 12+37	20 LT	0715		380.4																															1			1		1																				
		0715	0716		377.2	375.1	0.4											44																																										
Y4 11+90	20 LT	0716		378.3																															1			1		1																				
		0716	0718		375.1	373.0	0.5											44																																										
Y4 11+00	20 LT	0717		375.1																															1			1		1																				
		0717	0719		371.9	371.3	0.7											36																																										
Y4 11+45	20 LT	0718		376.2																															1			1		1																				
		0718	0717		373.0	371.9	0.7											44																																										
Y4 11+00	20 RT	0719		374.5																															1			1			1																			
SHEET TOTALS								44										580		204	48	116	276												25	13.3	0.9	16	1	8	7	1		9	9															

ABBREVIATIONS

C.A.A.	CORRUGATED ALUMINIUM ALLOY
C.B.	CATCH BASIN
C.S.	CORRUGATED STEEL
D.I.	DROP INLET
G.D.I.	GRATED DROP INLET
H.D.P.E.	HIGH DENSITY POLYETHYLENE
J.B.	JUNCTION BOX
M.H.	MANHOLE
N.S.	NARROW SLOT
P.V.C.	POLYVINYL CHLORIDE
R.C.	REINFORCED CONCRETE
T.B.D.I.	TRAFFIC BEARING DROP INLET
T.B.J.B.	TRAFFIC BEARING JUNCTION BOX
W.S.	WIDE SLOT

COMPUTED BY:	L. JAH	DATE:	01/12/2015
CHECKED BY:	A.K. WHITE	DATE:	11/16/2015

PROJECT NO.	SHEET NO.
U-3308	3D-4

NORTH CAROLINA DEPARTMENT OF TRANSPORTATION
DIVISION OF HIGHWAYS

Note: Invert Elevations indicated are for Bid Purposes only and shall not be used for project construction stakeout.
See "Standard Specifications For Roads and Structures, Section 300-5".

LIST OF PIPES, ENDWALLS, ETC. (FOR PIPES 48 INCHES & UNDER)

LINE & STATION	OFFSET	LT/RT	STRUCTURE NUMBER FROM	STRUCTURE NUMBER TO	TOP ELEVATION FT.	INVERT ELEVATION FT.	INVERT ELEVATION FT.	MINIMUM REQUIRED SLOPE %	Drainage Pipe (RCP, CSP, CAAP, HDPE, or PVC) 15	Drainage Pipe 18	DO NOT USE RCP	DO NOT USE CSP	DO NOT USE CAAP	DO NOT USE HDPE	DO NOT USE PVC	C. S. PIPE 12 .064	C. S. PIPE 15 .064	C. S. PIPE 18 .064	R. C. PIPE CLASS IV 15	R. C. PIPE CLASS IV 18	R. C. PIPE CLASS IV 24	R. C. PIPE CLASS IV 30	R. C. PIPE CLASS IV 36	R. C. PIPE CLASS IV 42	R. C. PIPE CLASS IV 48	R. C. PIPE CLASS V 12	R. C. PIPE CLASS V 15	R. C. PIPE CLASS V 18	R. C. PIPE CLASS V 24	R. C. PIPE CLASS V 30	R. C. PIPE CLASS V 48	BIT COAT CORRUGATED METAL PIPE 36	ENDWALLS STD. 838.01 OR STD. 838.11 (UNLESS NOTED OTHERWISE) CY	REINFORCED ENDWALLS CY	DRAINAGE STRUCTURE MASONRY CY	QUANTITIES FOR DRAINAGE STRUCTURES (NOTE: TOTAL LIN. FT. FOR PAY QUANTITY SHALL BE A + (1.3 X B)) 0' THRU 5' EACH	A 5' THRU 10' LIN. FT.	B 10' AND ABOVE LIN. FT.	C.B. STD. 840.01 OR STD. 840.02	FRAME, GRATES, AND HOOD STD. 840.03 GRATE TYPE E	F	G	CONCRETE TRANSITIONAL SECTION D.I. STD. 852.04 OR STD. 852.06	OPEN THROAT C.B. STD. 840.04 OR STD. 840.05	D.I. STD. 840.14 OR STD. 840.15	D.I. FRAME AND GRATES STD. 840.16	T.B.D.I. 840.36	T.B.D.I. FRAME AND GRATE 840.37	DRIVEWAY D.I. STD. 840.30	FRAME W/ GRATE FOR DRIVEWAY STD. 840.30	J.B. STD. 840.31 OR STD. 840.32	T.B.J.B. STD. 840.34	M.H. FRAME AND COVER STD. 840.54	CONVERT EXISTING C.B. TO J.B.	CONVERT EXISTING D.I. TO J.B.	CS PIPE ELBOWS NO. & SIZE	FLOWABLE FILL CY	CONCRETE COLLARS CL. "B" STD. 840.72 CY	CONCRETE AND BRICK PIPE PLUG STD. 840.71 CY	PIPE REMOVAL LIN. FT.	REMARKS
			0719	0721		371.3	370.5	0.9											40																																										
LALT 36+10	5	LT	0720		374.0																															1							1		1	1															
			0720	0714		371.0	370.1												32																																										
Y4 10+59	20	RT	0721		373.7																															1			1			1																					
			0721	0726		370.5	368.6	1.0											44																																										
LALT 34+12	35	LT	0722		375.6																															1	2.8		1			1																					
			0722	0705		367.8	367.4																	92																																					
LALT 33+61	4	RT	0723		376.4																															1							1		1	1															
			0723	0702		373.3	372.5												40																																										
LALT 33+63	35	RT	0724		375.7																															1			1		1																				
			0724	0708		371.8	370.7														136																																								
LALT 33+63	50	RT	0725		376.3																															1									1	1															
			0725	0724		373.1	372.5	0.4											16																																										
LALT 37+30	35	LT	0726		371.8																															1	2.7		1			1																					
			0726	0835		364.1	361.9	0.3																136																																					
Y5 10+46	18	LT	0727		371.8																															1			1		1																				
			0727	0728		367.9	365.8	0.8													76																																								
LALT 37+50	35	RT	0728		369.8																															1			1		1																				
			0728	0801		365.8	361.8	0.9													120																																								
LALT 38+74	35	RT	0801		365.7																															1	0.4		1		1																				
			0801	0813		360.3	359.8	0.5																24																																					
LALT 38+65	4	RT	0803		366.6																															1	0.4						1		1	1															
			0803	0801		361.2	360.3	0.3																32																																					
LALT 40+20	52	LT	0804		360.6																															1									1	1															
			0804	0807		358.4	357.5												16																																										
LALT 40+00	46	RT	0805		366.5																															1									1	1															
			0805	0838		362.6	359.8										12																																							2					2 @ 15"
LALT 40+40	7	RT	0806		361.2																															1							1		1	1															
			0806	0821		358.0	356.1												60																																										
LALT 40+21	35	LT	0807		360.7																															1			1			1																					
			0807	0812		357.5	355.3	0.3											68																																										
Y6 11+60	16	LT	0808		365.6																															1			1		1																				
			0808	0809		362.4	362.1	0.6											28																																										
Y6 11+60	14	RT	0809		365.3																															1			1			1																					
			0809	0811		362.1	355.9	0.7											92																																										
Y6 10+74	16	LT	0810		360.3																															1	2.4		1		1																				
Y6 10+66	16	RT	0811		359.0																															1	3.3		1			1																					
Y6 09+93	16	RT	0812		358.5																															1			1			1																					
			0812	0827		355.3	350.8	0.4											156																																										
LALT 39+00	35	RT	0813		365.2																															1	0.4		1		1																				
			0813	0838		359.8	357.5	0.5																100																																					
Y7 11+77	33	RT	0815		366.3																															1	1.0		1			1																					
			0815	0816		360.3	360.2														16																																								
Y7 11+78	16	RT	0816		365.4																															1	0.2															1	1								
			0816	0817		360.2	360.1														32																																								
Y7 11+78	16	LT	0817		365.2																															1	0.2		1		1																				
			0817	0819		360.1	357.7														72																																								
LALT 39+58	46	RT	0818		365.0																															1									1	1															
			0818	0805		362.7	362.6												40																																										
Y7 11+05	16	LT	0819		360.7																															1			1		1																				
SHEET TOTALS																	12		632		452			384												26	13.8		17		9	8	4		8	8						1	1			2					

ABBREVIATIONS

C.A.A.	CORRUGATED ALUMINIUM ALLOY
C.B.	CATCH BASIN
C.S.	CORRUGATED STEEL
D.I.	DROP INLET
G.D.I.	GRATED DROP INLET
H.D.P.E.	HIGH DENSITY POLYETHYLENE
J.B.	JUNCTION BOX
M.H.	MANHOLE
N.S.	NARROW SLOT
P.V.C.	POLYVINYL CHLORIDE
R.C.	REINFORCED CONCRETE
T.B.D.I.	TRAFFIC BEARING DROP INLET
T.B.J.B.	TRAFFIC BEARING JUNCTION BOX
W.S.	WIDE SLOT

RD266193

RD266193

COMPUTED BY:	L. JAH	DATE:	01/12/2015
CHECKED BY:	A.K. WHITE	DATE:	11/16/2015

PROJECT NO.	SHEET NO.
U-3308	3D-5

NORTH CAROLINA DEPARTMENT OF TRANSPORTATION
DIVISION OF HIGHWAYS

Note: Invert Elevations indicated are for Bid Purposes only and shall not be used for project construction stakeout. See "Standard Specifications For Roads and Structures, Section 300-5".

LIST OF PIPES, ENDWALLS, ETC. (FOR PIPES 48 INCHES & UNDER)

LINE & STATION	OFFSET		STRUCTURE NUMBER FROM	STRUCTURE NUMBER TO	TOP ELEVATION FT.	INVERT ELEVATION FT.	INVERT ELEVATION FT.	MINIMUM REQUIRED SLOPE %	Drainage Pipe (RCP, CSP, CAAP, HDPE, or PVC) 15	Drainage Pipe 18	DO NOT USE RCP	DO NOT USE CSP	DO NOT USE CAAP	DO NOT USE HDPE	DO NOT USE PVC	C. S. PIPE 12 (.064)	C. S. PIPE 15 (.064)	C. S. PIPE 18 (.064)	R. C. PIPE CLASS IV 15	R. C. PIPE CLASS IV 18	R. C. PIPE CLASS IV 24	R. C. PIPE CLASS IV 30	R. C. PIPE CLASS IV 36	R. C. PIPE CLASS IV 42	R. C. PIPE CLASS IV 48	R. C. PIPE CLASS V 12	R. C. PIPE CLASS V 15	R. C. PIPE CLASS V 18	R. C. PIPE CLASS V 24	R. C. PIPE CLASS V 30	R. C. PIPE CLASS V 48	BIT COAT CORRUGATED METAL PIPE 36
			0819	0820		357.7	355.9														24											
Y7 10+82	17	LT	0820		359.8																											
			0820	0842		353.7	349.8	0.7																156								
LALT 41+01	7	RT	0821		359.2																											
			0821	0820		356.1	356.0												28													
LALT 43+13	7	RT	0822		354.4																											
			0822	0839		349.8	349.7												28													
Y8 11+25	10	LT	0823		361.5																											
			0823	0824		358.3	356.7												24													
Y8 11+09	10	RT	0824		359.8																											
			0824	0826		356.7	349.7												96													
Y8 10+14	10	RT	0826		352.8																											
			0826	0828		349.7	349.4												28													
LALT 42+50	35	LT	0827		353.9																											
			0827	0842		345.8	345.6																		68							
LALT 43+16	35	LT	0828		352.5																											
			0828	0905		349.4	347.7	0.4											120													
Y9 10+92	14	LT	0829		355.2																											
			0829	0839		351.8	350.5	0.3												28												
Y9 10+93	14	RT	0830		355.4																											
			0830	0829		352.0	351.8													28												
LALT 43+35	7	RT	0831		353.0																											
			0831	0822		349.9	349.8												20													
Y9 11+35	14	RT	0832		358.7																											
			0832	0830		355.5	352.2	0.6											40													
LALT 42+53	51	RT	0833		357.4																											
			0833	0830		355.2	352.2												20													
LALT 42+48	52	LT	0834		352.8																											
			0834	0827		345.9	345.8																		16							
LALT 38+65	35	LT	0835		367.3																											
			0835	0803		361.9	361.2	0.3																40								
LALT 40+00	35	RT	0838		362.9																											
			0838	0820		357.5	354.4	0.5																100								
Y7 11+63	16	RT	0843		364.4																											
			0843	0816		362.1	362.1																				16					
Y11 10+78	27	RT	0902		350.4																											
			0902	0903		348.2	347.1												16													
Y11 10+76	14	RT	0903		350.3																											
			0903	0904		347.1	347.0												28													
Y11 10+67	16	LT	0904		350.2																											
LALT 44+37	35	LT	0905		350.8																											
			0905	0909		346.5	346.4														40											
Y10 10+85	10	LT	0906		355.3																											
			0906	0907		352.1	349.1												28													
Y10 10+55	10	LT	0907		352.2																											
			0907	0908		349.1	348.5												20													
Y10 10+50	10	RT	0908		351.6																											
SHEET TOTALS																			496	56	64			296	84		16					

STRUCTURE NUMBER	ENDWALLS STD. 838.01 OR STD. 838.11 (UNLESS NOTED OTHERWISE) CY	REINFORCED ENDWALLS CY	DRAINAGE STRUCTURE MASONRY CY	QUANTITIES FOR DRAINAGE STRUCTURES 0' THRU 5' EACH	A 5' THRU 10' LIN. FT.	B 10' AND ABOVE LIN. FT.	C.B. STD. 840.01 OR STD. 840.02	FRAME, GRATES, AND HOOD STD. 840.03 GRATE TYPE E	F	G	CONCRETE TRANSITIONAL SECTION D.I. STD. 852.04 OR STD. 852.06	OPEN THROAT C.B. STD. 840.04 OR STD. 840.05	D.I. STD. 840.14 OR STD. 840.15	D.I. FRAME AND GRATES STD. 840.16	T.B.D.I. 840.36	T.B.D.I. FRAME AND GRATE 840.37	DRIVEWAY D.I. STD. 840.30	FRAME W/ GRATE FOR DRIVEWAY STD. 840.30	J.B. STD. 840.31 OR STD. 840.32	T.B.J.B. STD. 840.34	M.H. FRAME AND COVER STD. 840.54	CONVERT EXISTING C.B. TO J.B.	CONVERT EXISTING D.I. TO J.B.	CS PIPE ELBOWS NO. & SIZE	FLOWABLE FILL CY	CONCRETE COLLARS CL. "B" STD. 840.72 CY	CONCRETE AND BRICK PIPE PLUG STD. 840.71 CY	PIPE REMOVAL LIN. FT.	REMARKS
0820				1	1.1		1	1																					
0821				1							1		1	1															
0822				1							1		1	1															
0823				1			1		1																				
0824				1			1			1																			
0826				1			1	1																					
0827				1	3.1		1			1																			
0828				1			1			1																			
0829				1			1		1																				
0830				1			1			1																			
0831				1							1		1	1															
0832				1			1			1																			
0833				1									1	1															
0834				1	1.9								1	1															
0835				1	0.4		1			1																			
0838				1	0.4		1		1																				
0843				1			1			1																			
0902				1									1	1															
0903				1			1	1																					
0904				1			1	1																					
0905				1			1			1																			
0906				1			1		1																				
0907				1			1		1																				
0908				1			1			1																			
SHEET TOTALS				24	6.9		18	4	5	9	3		6	6															

NOTE: TOTAL LIN. FT. FOR PAY QUANTITY SHALL BE A + (1.3 X B)

ABBREVIATIONS

C.A.A.	CORRUGATED ALUMINIUM ALLOY
C.B.	CATCH BASIN
C.S.	CORRUGATED STEEL
D.I.	DROP INLET
G.D.I.	GRATED DROP INLET
H.D.P.E.	HIGH DENSITY POLYETHYLENE
J.B.	JUNCTION BOX
M.H.	MANHOLE
N.S.	NARROW SLOT
P.V.C.	POLYVINYL CHLORIDE
R.C.	REINFORCED CONCRETE
T.B.D.I.	TRAFFIC BEARING DROP INLET
T.B.J.B.	TRAFFIC BEARING JUNCTION BOX
W.S.	WIDE SLOT

COMPUTED BY: L. JAH DATE: 01/12/2015

CHECKED BY: A.K. WHITE DATE: 11/16/2015

RD266193

PROJECT NO.	SHEET NO.
U-3308	3D-6

NORTH CAROLINA DEPARTMENT OF TRANSPORTATION
DIVISION OF HIGHWAYS

Note: Invert Elevations indicated are for Bid Purposes only and shall not be used for project construction stakeout. See "Standard Specifications For Roads and Structures, Section 300-5".

LIST OF PIPES, ENDWALLS, ETC. (FOR PIPES 48 INCHES & UNDER)

LINE & STATION	OFFSET	STRUCTURE NUMBER FROM	STRUCTURE NUMBER TO	TOP ELEVATION FT.	INVERT ELEVATION FT.	INVERT ELEVATION FT.	MINIMUM REQUIRED SLOPE %	Drainage Pipe (RCP, CSP, CAAP, HDPE, or PVC) 15	Drainage Pipe 18	DO NOT USE RCP	DO NOT USE CSP	DO NOT USE CAAP	DO NOT USE HDPE	DO NOT USE PVC	C. S. PIPE 12 .064	C. S. PIPE 15 .064	C. S. PIPE 18 .064	R. C. PIPE CLASS IV 15	R. C. PIPE CLASS IV 18	R. C. PIPE CLASS IV 24	R. C. PIPE CLASS IV 30	R. C. PIPE CLASS IV 36	R. C. PIPE CLASS IV 42	R. C. PIPE CLASS IV 48	R. C. PIPE CLASS V 12	R. C. PIPE CLASS V 15	R. C. PIPE CLASS V 18	R. C. PIPE CLASS V 24	R. C. PIPE CLASS V 30	R. C. PIPE CLASS V 48	BIT COAT CORRUGATED METAL PIPE 36
		0908	0909		348.5	347.3												36													
LALT 44+78	35 LT	0909		350.5																											
		0909	0911		346.4	346.2														80											
LALT 45+58	35 LT	0911		350.3																											
		0911	0916		346.2	345.8														84											
Y12 11+10	10 RT	0913		357.9																											
		0913	0914		354.7	354.6												20													
Y12 11+10	10 LT	0914		357.8																											
		0914	0915		354.6	350.5												32													
Y12 10+75	10 LT	0915		353.7																											
		0915	0916		350.5	347.4												44													
LALT 46+41	35 LT	0916		350.5																											
		0916	0917		345.8	345.7	0.3													112											
LALT 47+00	35 LT	0917		351.1																											
		0917	1003		345.2	344.5															160										
LALT 47+50	5 LT	0918		352.4																											
		0918	0910		349.2	349.1												40													
LALT 44+35	50 LT	0919		350.5																											
		0919	0905		347.3	347.3												16													
LALT 47+00	47 LT	0920		350.9																											
		0920	0917		348.7	347.9												12													
LALT 45+57	48 LT	0921		350.3																											
		0921	0911		348.1	347.1												12													
Y14 10+72	20 RT	1001		352.2																											
		1001	1002		349.0	348.8												40													
Y14 10+59	19 LT	1002		352.0																											
		1002	1003		348.8	348.7												28													
LALT 48+62	30 LT	1003		352.4																											
		1003	1018		344.5	344.3															68										
Y15 12+11	26 RT	1006		341.9																											
Y15 12+14	19 RT	1007		341.5																											
LALT 50+50	7 RT	1010		349.7																											
		1010	1014		346.5	343.1												180													
LALT 51+80	35 LT	1011		345.8																											
		1011	1015		342.7	342.4												48													
LALT 52+28	35 RT	1012		346.0																											
		1012	1013		341.0	340.9															24										
LALT 52+28	7 RT	1014		346.3																											
		1014	1012		341.1	341.0															28										
LALT 52+28	35 LT	1015		345.6																											
		1015	1014		341.2	341.1															40										
SHEET TOTALS																		508		276	320										

QUANTITIES FOR DRAINAGE STRUCTURES — NOTE: TOTAL LIN. FT. FOR PAY QUANTITY SHALL BE A + (1.3 X B)

LINE & STATION	FROM	TO	ENDWALLS STD. 838.01 OR STD. 838.11 (UNLESS NOTED OTHERWISE) CY	REINFORCED ENDWALLS CY	DRAINAGE STRUCTURE MASONRY CY	0' THRU 5' EACH	A 5' THRU 10' LIN. FT.	B 10' AND ABOVE LIN. FT.	C.B. STD. 840.01 OR STD. 840.02	FRAME, GRATES, AND HOOD STD. 840.03 GRATE TYPE E	F	G	CONCRETE TRANSITIONAL SECTION D.I. STD. 852.04 OR STD. 852.06	OPEN THROAT C.B. STD. 840.04 OR STD. 840.05	D.I. STD. 840.14 OR STD. 840.15	D.I. FRAME AND GRATES STD. 840.16	T.B.D.I. 840.36	T.B.D.I. FRAME AND GRATE 840.37	DRIVEWAY D.I. STD. 840.30	FRAME W/ GRATE FOR DRIVEWAY STD. 840.30	J.B. STD. 840.31 OR STD. 840.32	T.B.J.B. STD. 840.34	M.H. FRAME AND COVER STD. 840.54	CONVERT EXISTING C.B. TO J.B.	CONVERT EXISTING D.I. TO J.B.	CS PIPE ELBOWS NO. & SIZE	FLOWABLE FILL CY	CONCRETE COLLARS CL. "B" STD. 840.72 CY	CONCRETE AND BRICK PIPE PLUG STD. 840.71 CY	PIPE REMOVAL LIN. FT.	REMARKS
	0908	0909																													
LALT 44+78	0909					1			1			1																			
	0909	0911																													
LALT 45+58	0911					1			1	1																					
	0911	0916																													
Y12 11+10	0913					1			1			1																			
	0913	0914																													
Y12 11+10	0914					1			1		1																				
	0914	0915																													
Y12 10+75	0915					1			1		1																				
	0915	0916																													
LALT 46+41	0916					1			1		1																				
	0916	0917																													
LALT 47+00	0917					1	0.9		1		1																				
	0917	1003																													
LALT 47+50	0918					1							1		1	1															
	0918	0910																													
LALT 44+35	0919					1									1	1															
	0919	0905																													
LALT 47+00	0920					1									1	1															
	0920	0917																													
LALT 45+57	0921					1									1	1															
	0921	0911																													
Y14 10+72	1001					1			1	1																					
	1001	1002																													
Y14 10+59	1002					1			1	1																					
	1002	1003																													
LALT 48+62	1003					1	2.9		1		1																				
	1003	1018																													
Y15 12+11	1006					1									1	1															
Y15 12+14	1007					1			1	1																					
LALT 50+50	1010					1							1		1	1															
	1010	1014																													
LALT 51+80	1011					1			1			1																			
	1011	1015																													
LALT 52+28	1012					1			1	1																					
	1012	1013																													
LALT 52+28	1014					1	0.2						1		1	1															
	1014	1012																													
LALT 52+28	1015					1			1	1																					
	1015	1014																													
SHEET TOTALS						21	4.0		14	6	5	3	3		7	7															

ABBREVIATIONS

C.A.A.	CORRUGATED ALUMINIUM ALLOY
C.B.	CATCH BASIN
C.S.	CORRUGATED STEEL
D.I.	DROP INLET
G.D.I.	GRATED DROP INLET
H.D.P.E.	HIGH DENSITY POLYETHYLENE
J.B.	JUNCTION BOX
M.H.	MANHOLE
N.S.	NARROW SLOT
P.V.C.	POLYVINYL CHLORIDE
R.C.	REINFORCED CONCRETE
T.B.D.I.	TRAFFIC BEARING DROP INLET
T.B.J.B.	TRAFFIC BEARING JUNCTION BOX
W.S.	WIDE SLOT

R12/26/103

COMPUTED BY:	L. JAH	DATE:	01/12/2015
CHECKED BY:	A.K. WHITE	DATE:	11/16/2015

NORTH CAROLINA DEPARTMENT OF TRANSPORTATION
DIVISION OF HIGHWAYS

PROJECT NO.	SHEET NO.
U-3308	3D-7

Note: Invert Elevations indicated are for Bid Purposes only and shall not be used for project construction stakeout. See "Standard Specifications For Roads and Structures, Section 300-5".

LIST OF PIPES, ENDWALLS, ETC. (FOR PIPES 48 INCHES & UNDER)

LINE & STATION	OFFSET	STRUCTURE NUMBER FROM	STRUCTURE NUMBER TO	TOP ELEVATION FT.	INVERT ELEVATION FT.	INVERT ELEVATION FT.	MINIMUM REQUIRED SLOPE %	Drainage Pipe (RCP, CSP, CAAP, HDPE, or PVC) SIZE	Drainage Pipe THICKNESS OR GAUGE	DO NOT USE RCP	DO NOT USE CSP	DO NOT USE CAAP	DO NOT USE HDPE	DO NOT USE PVC	C. S. PIPE SIZE	C. S. PIPE THICKNESS OR GAUGE	R. C. PIPE CLASS IV SIZE	R. C. PIPE CLASS V SIZE	BIT COAT CORRUGATED METAL PIPE SIZE	ENDWALLS STD. 838.01 OR STD. 838.11 (UNLESS NOTED OTHERWISE) CY	REINFORCED ENDWALLS CY	DRAINAGE STRUCTURE MASONRY CY	QUANTITIES FOR DRAINAGE STRUCTURES (NOTE: TOTAL LIN. FT. FOR PAY QUANTITY SHALL BE A + (1.3 X B)) A: 0' THRU 5' EACH	A: 5' THRU 10' LIN. FT.	B: 10' AND ABOVE LIN. FT.	C.B. STD. 840.01 OR STD. 840.02	FRAME, GRATES, AND HOOD STD. 840.03 GRATE TYPE E	F	G	CONCRETE TRANSITIONAL SECTION D.I. STD. 852.04 OR STD. 852.06		OPEN THROAT C.B. STD. 840.04 OR STD. 840.05	D.I. STD. 840.14 OR STD. 840.15	D.I. FRAME AND GRATES STD. 840.16	T.B.D.I. 840.36	T.B.D.I. FRAME AND GRATE 840.37	DRIVEWAY D.I. STD. 840.30	FRAME W/ GRATE FOR DRIVEWAY STD. 840.30	J.B. STD. 840.31 OR STD. 840.32	T.B.J.B. STD. 840.34	M.H. FRAME AND COVER STD. 840.54	CONVERT EXISTING C.B. TO J.B.	CONVERT EXISTING D.I. TO J.B.	CS PIPE ELBOWS NO. & SIZE	FLOWABLE FILL CY	CONCRETE COLLARS CL. "B" STD. 840.72 CY	CONCRETE AND BRICK PIPE PLUG STD. 840.71 CY	PIPE REMOVAL LIN. FT.	REMARKS
LALT 53+00	35 LT	1016		346.1																				1			1		1																					
		1016	1015		342.2	341.7	0.4												72																														
Y16 11+83	15 RT	1101		355.2																				1			1			1																			
		1101	1102		352.0	351.9											28																																
Y16 11+82	15 LT	1102		355.0																				1			1		1																				
		1102	1123		351.9	349.1											56																																
Y16 10+52	15 LT	1103		348.4																				1			1			1																			
		1103	1104		345.2	344.9	0.4										20																																
LALT 53+88	35 LT	1104		348.1																				1			1		1																				
		1104	1016		344.7	342.7	1.6											88																															
LALT 54+57	55 LT	1105		349.8																				1										1	1															
		1105	1106		346.4	346.3												20																																
LALT 54+63	35 LT	1106		350.0																				1			1		1																				
		1106	1104		346.3	344.7	0.7											72																																
LALT 55+25	35 LT	1107		351.6																				1			1		1																				
		1107	1106		348.4	346.8	0.5										60																																
LALT 55+97	35 LT	1108		353.4																				1			1		1																				
		1108	1107		350.2	348.4	0.4										72																																
LALT 54+63	35 RT	1109		350.0																				1			1			1																				
		1109	1125		346.8	344.7											80																																
LALT 54+52	47 RT	1110		350.0																				1										1	1															
		1110	1109		346.8	346.8											16																																
LALT 55+70	35 RT	1111		352.7																				1			1			1																				
		1111	1109		349.4	346.8											108																																
LALT 55+70	50 RT	1112		352.7																				1										1	1															
		1112	1111		349.5	349.4											16																																
LALT 57+00	35 LT	1113		355.9																				1			1		1																				
		1113	1108		352.2	350.2											104																																
Y18 13+30	19 RT	1114		355.6																				1			1			1																				
		1114	1113		352.4	352.2											16																																
Y18 12+42	19 RT	1115		361.5																				1			1		1																				
		1115	1114		358.3	352.4											88																																
Y18 12+40	20 LT	1116		361.8																				1			1			1																				
		1116	1115		358.6	358.3											36																																
LALT 59+00	35 RT	1117		355.5																				1			1		1																				
LALT 59+00	4 RT	1118		356.2																				1							1			1	1														
		1118	1117		352.2	352.1											28																																
LALT 59+00	35 LT	1119		355.5																				1			1			1																				
		1119	1118		352.3	352.2											36																																
LALT 55+24	4 LT	1120		352.3																				1							1			1	1														
		1120	1107		349.2	348.4											28																																
Y16 11+25	15 LT	1123		352.3																				1			1		1																				
		1123	1103		349.1	345.2	0.3										72																																
LALT 56+00	55 LT	1124		353.7																				1										1	1															
		1124	1108		350.5	350.2											20																																
LALT 53+80	35 RT	1125		347.9																				1			1			1																				
		1125	1013		344.5	344.1												124																																
LALT 60+10	35 LT	1202		351.8																				1			1			1																				
		1202	1217		348.6	340.7											208																																
					SHEET TOTALS												1092	304	72					25			19		10	9		2			6	6														

ABBREVIATIONS

C.A.A.	CORRUGATED ALUMINIUM ALLOY
C.B.	CATCH BASIN
C.S.	CORRUGATED STEEL
D.I.	DROP INLET
G.D.I.	GRATED DROP INLET
H.D.P.E.	HIGH DENSITY POLYETHYLENE
J.B.	JUNCTION BOX
M.H.	MANHOLE
N.S.	NARROW SLOT
P.V.C.	POLYVINYL CHLORIDE
R.C.	REINFORCED CONCRETE
T.B.D.I.	TRAFFIC BEARING DROP INLET
T.B.J.B.	TRAFFIC BEARING JUNCTION BOX
W.S.	WIDE SLOT

COMPUTED BY: L. JAH DATE: 01/12/2015

CHECKED BY: A.K. WHITE DATE: 11/16/2015

RD266193

PROJECT NO.	SHEET NO.
U-3308	3D-8

NORTH CAROLINA DEPARTMENT OF TRANSPORTATION
DIVISION OF HIGHWAYS

**Note: Invert Elevations indicated are for Bid Purposes only and shall not be used for project construction stakeout.
See "Standard Specifications For Roads and Structures, Section 300-5".**

LIST OF PIPES, ENDWALLS, ETC. (FOR PIPES 48 INCHES & UNDER)

Line & Station	Offset		Structure Number From	To	Top Elevation (Ft.)	Invert Elevation (Ft.)	Invert Elevation (Ft.)	Minimum Required Slope (%)	Drainage Pipe (RCP, CSP, CAAP, HDPE, or PVC) 15	18	Do Not Use RCP	Do Not Use CSP	Do Not Use CAAP	Do Not Use HDPE	Do Not Use PVC	C. S. Pipe 12 (.064)	C. S. Pipe 15 (.064)	C. S. Pipe 18 (.064)	R. C. Pipe Class IV 15	18	24	30	36	42	48	R. C. Pipe Class V 12	15	18	24	30	48	Bit Coat Corrugated Metal Pipe 36
LALT 59+83	35	RT	1203		352.8																											
			1203	1211		349.7	337.6												316													
Y20 10+87	10	RT	1204		357.9																											
			1204	1202		354.5	348.6										32															
Y20 10+67	39	LT	1205		357.9																											
			1205	1204		354.7	354.5												56													
Y22 12+80	26	RT	1206		337.4																											
			1206	1207		335.2	334.1												16													
Y22 12+65	15	RT	1207		337.3																											
			1207	1208		334.1	334.1												28													
Y22 12+65	16	LT	1208		337.3																											
			1208	1215		334.1	333.7												84													
LALT 63+25	35	LT	1209		339.8																											
			1209	1210		336.7	332.0	0.3											100													
LALT 64+25	35	LT	1210		336.2																											
			1210	1301		332.0	331.3	1.0											72													
LALT 63+01	35	RT	1211		340.8																											
			1211	1212		337.6	335.7												72													
Y22 14+94	24	RT	1212		338.9																											
			1212	1213		335.7	334.2												104													
Y22 16+00	20	RT	1213		337.4																											
			1213	2401		334.1	333.1	0.5											188													
Y22 13+50	17	LT	1215		337.7																											
			1215	1210		333.7	332.0												44													
LALT 63+04	4	LT	1216		341.3																											
			1216	1211		338.2	337.6												40													
LALT 62+20	35	LT	1217		343.8																											
			1217	1209		340.7	336.7												104													
LALT 64+99	35	LT	1301		334.4																											
			1301	1309		329.5	329.2	0.4															40									
LALT 65+79	49	LT	1302		335.5																											
			1302	1303		332.0	329.6															24										
LALT 65+79	28	LT	1303		334.0																											
			1303	1309		329.6	329.5															40										
LALT 65+81	20	RT	1304		334.1																											
			1304	1306		331.0	330.9												40													
LALT 65+25	20	RT	1305		334.4																											
			1305	1306		331.2	331.2												12													
LALT 65+39	20	RT	1306		334.3																											
			1306	1307		328.3	327.9	0.4																12								
LALT 65+39	30	RT	1307		334.3																											
LALT 65+39	31	LT	1309		334.1																											
			1309	1306		328.5	328.3	0.4																48								
Y 13+89	21	LT	1501		415.7																											
			1501	1502		412.2	407.6	0.5									36															
Y 14+50	22	LT	1505		415.5																											
			1505	1501		412.3	412.2												60													
Y 24+11	18	RT	1602		407.6																											
			1602	1603		404.4	402.7	0.4											32													
Y 24+17	17	LT	1603		408.5																											
SHEET TOTALS																	68		1368			64	40	60								

From	To	Endwalls Std. 838.01 or Std. 838.11 (Unless Noted Otherwise) (CY)	Reinforced Endwalls (CY)	Drainage Structure Masonry (CY)	Quantities for Drainage Structures 0' thru 5' (Each)	A 5' thru 10' (Lin. Ft.)	B 10' and above (Lin. Ft.)	C.B. Std. 840.01 or Std. 840.02	Frame, Grates, and Hood Std. 840.03 Grate Type E	F	G	Concrete Transitional Section D.I. Std. 852.04 or Std. 852.06	Open Throat C.B. Std. 840.04 or Std. 840.05	D.I. Std. 840.14 or Std. 840.15	D.I. Frame and Grates Std. 840.16	T.B.D.I. 840.36	T.B.D.I. Frame and Grate 840.37	Driveway D.I. Std. 840.30	Frame w/ Grate for Driveway Std. 840.30	J.B. Std. 840.31 or Std. 840.32	T.B.J.B. Std. 840.34	M.H. Frame and Cover Std. 840.54	Convert Existing C.B. to J.B.	Convert Existing D.I. to J.B.	CS Pipe Elbows No. & Size	Flowable Fill (CY)	Concrete Collars Cl. "B" Std. 840.72 (CY)	Concrete and Brick Pipe Plug Std. 840.71 (CY)	Pipe Removal (Lin. Ft.)	Remarks
1203					1			1		1																				
1204					1			1		1																				
1205					1			1			1																			
1206					1									1	1															
1207					1			1	1																					
1208					1			1	1																					
1209					1			1			1																			
1210					1			1			1																			
1211					1			1		1																				
1212					1			1		1																				
1213					1			1	1																					
1215					1			1			1																			
1216					1							1		1	1															
1217					1			1			1																			
1301					1			1			1																			
1302					1									1	1															
1303					1			1	1																					
1304					1			1	1																					
1305					1			1		1																				
1306					1	1.0		1		1																				
1307					1	2.3														1		1								
1309					1	0.6		1			1																			
1501					1			1		1																				
1501	1502																													TIES TO TRACK WORK
1505					1			1		1																				
1602					1			1		1																				
1603					1	0.8		1			1																			
SHEET TOTALS					26	4.7		22	5	9	8	1		3	3					1		1								

NOTE: TOTAL LIN. FT. FOR PAY QUANTITY SHALL BE A + (1.3 X B)

ABBREVIATIONS

C.A.A.	CORRUGATED ALUMINIUM ALLOY
C.B.	CATCH BASIN
C.S.	CORRUGATED STEEL
D.I.	DROP INLET
G.D.I.	GRATED DROP INLET
H.D.P.E.	HIGH DENSITY POLYETHYLENE
J.B.	JUNCTION BOX
M.H.	MANHOLE
N.S.	NARROW SLOT
P.V.C.	POLYVINYL CHLORIDE
R.C.	REINFORCED CONCRETE
T.B.D.I.	TRAFFIC BEARING DROP INLET
T.B.J.B.	TRAFFIC BEARING JUNCTION BOX
W.S.	WIDE SLOT

RD266193

COMPUTED BY:	L. JAH	DATE:	01/12/2015
CHECKED BY:	A.K. WHITE	DATE:	11/16/2015

PROJECT NO.	SHEET NO.
U-3308	3D-9

NORTH CAROLINA DEPARTMENT OF TRANSPORTATION
DIVISION OF HIGHWAYS

Note: Invert Elevations indicated are for Bid Purposes only and shall not be used for project construction stakeout.
See "Standard Specifications For Roads and Structures, Section 300-5".

LIST OF PIPES, ENDWALLS, ETC. (FOR PIPES 48 INCHES & UNDER)

LINE & STATION / SIZE / THICKNESS OR GAUGE	OFFSET		STRUCTURE NUMBER FROM	STRUCTURE NUMBER TO	TOP ELEVATION FT.	INVERT ELEVATION FT.	INVERT ELEVATION FT.	MINIMUM REQUIRED SLOPE %	Drainage Pipe (RCP, CSP, CAAP, HDPE, or PVC) 15	Drainage Pipe 18	DO NOT USE RCP	DO NOT USE CSP	DO NOT USE CAAP	DO NOT USE HDPE	DO NOT USE PVC	C. S. PIPE 12 .064	C. S. PIPE 15 .064	C. S. PIPE 18 .064	R. C. PIPE CLASS IV 15	IV 18	IV 24	IV 30	IV 36	IV 42	IV 48	R. C. PIPE CLASS V 12	V 15	V 18	V 24	V 30	V 48	BIT COAT CORRUGATED METAL PIPE 36
Y 23+62	18	RT	1604		409.0																											
			1604	1602		405.8	404.4	0.4											48													
Y 21+85	18	RT	1605		413.9																											
			1605	1604		411.4	405.8																				176					
Y 20+20	18	LT	1606		416.4																											
			1606	1607		413.3	413.1												36													
Y 20+30	17	RT	1607		416.8																											
			1607	1605		413.1	411.4																				152					
Y7 12+51	16	RT	1801		368.9																											
			1801	0816		365.7	362.2												72													
Y15 15+75	15	LT	2001		340.0																											
			2001	2002		333.5	333.0	1.6																72								
Y15 12+97	26	RT	2003		342.2																											
			2003	2004		339.9	338.9												8													
Y15 12+96	19	RT	2004		342.0																											
			2004	1007		338.9	338.7												80													
Y15 13+51	26	RT	2005		342.4																											
			2005	2006		340.2	339.2												8													
Y15 13+51	19	RT	2006		342.4																											
			2006	2004		339.2	338.9												56													
Y15 15+95	17	RT	2007		339.8																											
			2007	2008		333.4	333.3																	20								
Y22 17+90	16	RT	2401		336.2																											
			2401	2402		332.8	332.6													32												
			2402	2403		332.6	332.5													48												
Y22 17+89	16	LT	2402		336.5																											
			2403	2404		331.7	328.1	0.3												32												
Y22 18+36	15	LT	2403		336.0																											
Y22 16+00	20	LT	2406		337.4																											
			2406	1213		334.2	334.1												40													
LALT 65+59	2	LT	0000																													
LALT 65+16	2	LT	0000																													
LALT 19+36	46	LT	0000																													
LALT 20+14	39	LT	0000																													
LALT 20+46	60	LT	0000																													
LALT 19+95	8	RT	0000																													
LALT 25+07	30	RT	0000																													
LALT 31+51	55	LT	0000																													
LALT 31+82	54	LT	0000																													
LALT 31+42	42	LT	0000																													
LALT 31+17	27	LT	0000																													
LALT 31+39	39	RT	0000																													
LALT 36+65	32	LT	0000																													
LALT 36+77	29	LT	0000																													
LALT 36+29	14	RT	0000																													
LALT 36+74	86	LT	0000																													
LALT 40+49	32	LT	0000																													
LALT 43+01	32	LT	0000																													
SHEET TOTALS																			348	112				92			328					

LINE & STATION	FROM	TO	ENDWALLS STD. 838.01 OR STD. 838.11 (UNLESS NOTED OTHERWISE) CY	REINFORCED ENDWALLS CY	DRAINAGE STRUCTURE MASONRY CY	QUANTITIES FOR DRAINAGE STRUCTURES (NOTE: TOTAL LIN. FT. FOR PAY QUANTITY SHALL BE A + (1.3 X B)) 0' THRU 5' EACH	A 5' THRU 10' LIN. FT.	B 10' AND ABOVE LIN. FT.	C.B. STD. 840.01 OR STD. 840.02	FRAME, GRATES, AND HOOD STD. 840.03 GRATE TYPE E	F	G	CONCRETE TRANSITIONAL SECTION D.I. STD. 852.04 OR STD. 852.06	OPEN THROAT C.B. STD. 840.04 OR STD. 840.05	D.I. STD. 840.14 OR STD. 840.15	D.I. FRAME AND GRATES STD. 840.16	T.B.D.I. 840.36	T.B.D.I. FRAME AND GRATE 840.37	DRIVEWAY D.I. STD. 840.30	FRAME W/ GRATE FOR DRIVEWAY STD. 840.30	J.B. STD. 840.31 OR STD. 840.32	T.B.J.B. STD. 840.34	M.H. FRAME AND COVER STD. 840.54	CONVERT EXISTING C.B. TO J.B.	CONVERT EXISTING D.I. TO J.B.	CS PIPE ELBOWS NO. & SIZE	FLOWABLE FILL CY	CONCRETE COLLARS CL. "B" STD. 840.72 CY	CONCRETE AND BRICK PIPE PLUG STD. 840.71 CY	PIPE REMOVAL LIN. FT.	REMARKS
Y 23+62	1604					1			1		1																				
Y 21+85	1605					1			1		1																				
Y 20+20	1606					1			1			1																			
Y 20+30	1607					1			1		1																				
Y7 12+51	1801					1			1			1																			
Y15 15+75	2001					1	1.5		1			1																			
Y15 12+97	2003					1									1	1															
Y15 12+96	2004					1			1			1																			
Y15 13+51	2005					1									1	1															
Y15 13+51	2006					1			1			1																			
Y15 15+95	2007					1	1.4		1		1																				
Y22 17+90	2401					1			1		1																				
Y22 17+89	2402					1			1			1																			
Y22 18+36	2403					1			1	1																					
Y22 16+00	2406					1			1			1																			
LALT 65+59	0000																													40	REMOVE PIPE OR FILL W/FLOWABLE FILL
LALT 65+16	0000																													64	REMOVE PIPE OR FILL W/FLOWABLE FILL
LALT 19+36	0000																													35	REMOVE PIPE OR FILL W/FLOWABLE FILL
LALT 20+14	0000																													61	REMOVE PIPE OR FILL W/FLOWABLE FILL
LALT 20+46	0000																													68	REMOVE PIPE OR FILL W/FLOWABLE FILL
LALT 19+95	0000																													88	REMOVE PIPE OR FILL W/FLOWABLE FILL
LALT 25+07	0000																													76	REMOVE PIPE OR FILL W/FLOWABLE FILL
LALT 31+51	0000																													107	REMOVE PIPE OR FILL W/FLOWABLE FILL
LALT 31+82	0000																													42	REMOVE PIPE OR FILL W/FLOWABLE FILL
LALT 31+42	0000																													65	REMOVE PIPE OR FILL W/FLOWABLE FILL
LALT 31+17	0000																													60	REMOVE PIPE OR FILL W/FLOWABLE FILL
LALT 31+39	0000																													28	REMOVE PIPE OR FILL W/FLOWABLE FILL
LALT 36+65	0000																													26	REMOVE PIPE OR FILL W/FLOWABLE FILL
LALT 36+77	0000																													52	REMOVE PIPE OR FILL W/FLOWABLE FILL
LALT 36+29	0000																													75	REMOVE PIPE OR FILL W/FLOWABLE FILL
LALT 36+74	0000																													38	REMOVE PIPE OR FILL W/FLOWABLE FILL
LALT 40+49	0000																													30	REMOVE PIPE OR FILL W/FLOWABLE FILL
LALT 43+01	0000																													24	REMOVE PIPE OR FILL W/FLOWABLE FILL
SHEET TOTALS						15	2.9		13	1	5	7			2	2														979	

ABBREVIATIONS

C.A.A.	CORRUGATED ALUMINIUM ALLOY
C.B.	CATCH BASIN
C.S.	CORRUGATED STEEL
D.I.	DROP INLET
G.D.I.	GRATED DROP INLET
H.D.P.E.	HIGH DENSITY POLYETHYLENE
J.B.	JUNCTION BOX
M.H.	MANHOLE
N.S.	NARROW SLOT
P.V.C.	POLYVINYL CHLORIDE
R.C.	REINFORCED CONCRETE
T.B.D.I.	TRAFFIC BEARING DROP INLET
T.B.J.B.	TRAFFIC BEARING JUNCTION BOX
W.S.	WIDE SLOT

R0266103

COMPUTED BY:	L. JAH	DATE:	01/12/2015
CHECKED BY:	A.K. WHITE	DATE:	11/16/2015

NORTH CAROLINA DEPARTMENT OF TRANSPORTATION
DIVISION OF HIGHWAYS

PROJECT NO.	SHEET NO.
U-3308	3D-10

Note: Invert Elevations indicated are for Bid Purposes only and shall not be used for project construction stakeout. See "Standard Specifications For Roads and Structures, Section 300-5".

LIST OF PIPES, ENDWALLS, ETC. (FOR PIPES 48 INCHES & UNDER)

LINE & STATION	OFFSET	STRUCTURE NUMBER FROM	STRUCTURE NUMBER TO	TOP ELEVATION FT.	INVERT ELEVATION FT.	INVERT ELEVATION FT.	MINIMUM REQUIRED SLOPE %	Drainage Pipe (RCP, CSP, CAAP, HDPE, or PVC) SIZE	THICKNESS OR GAUGE	DO NOT USE RCP	DO NOT USE CSP	DO NOT USE CAAP	DO NOT USE HDPE	DO NOT USE PVC	C. S. PIPE SIZE	THICKNESS OR GAUGE	R. C. PIPE CLASS IV SIZE	R. C. PIPE CLASS V SIZE	BIT COAT CORRUGATED METAL PIPE SIZE	ENDWALLS STD. 838.01 OR STD. 838.11 (UNLESS NOTED OTHERWISE) CY	REINFORCED ENDWALLS CY	DRAINAGE STRUCTURE MASONRY CY	QUANTITIES FOR DRAINAGE STRUCTURES (NOTE: TOTAL LIN. FT. FOR PAY QUANTITY SHALL BE A + (1.3 X B)) A: 0' THRU 5' EACH	A: 5' THRU 10' LIN. FT.	A: 10' AND ABOVE LIN. FT.	C.B. STD. 840.01 OR STD. 840.02	FRAME, GRATES, AND HOOD STD. 840.03 GRATE TYPE E	F	G	CONCRETE TRANSITIONAL SECTION D.I. STD. 852.04 OR STD. 852.06		OPEN THROAT C.B. STD. 840.04 OR STD. 840.05	D.I. STD. 840.14 OR STD. 840.15	D.I. FRAME AND GRATES STD. 840.16	T.B.D.I. 840.36	T.B.D.I. FRAME AND GRATE 840.37	DRIVEWAY D.I. STD. 840.30	FRAME W/ GRATE FOR DRIVEWAY STD. 840.30	J.B. STD. 840.31 OR STD. 840.32	T.B.J.B. STD. 840.34	M.H. FRAME AND COVER STD. 840.54	CONVERT EXISTING C.B. TO J.B.	CONVERT EXISTING D.I. TO J.B.	CS PIPE ELBOWS NO. & SIZE	FLOWABLE FILL CY	CONCRETE COLLARS CL. "B" STD. 840.72 CY	CONCRETE AND BRICK PIPE PLUG STD. 840.71 CY	PIPE REMOVAL LIN. FT.	REMARKS
								15 18							12 15 18		15 18 24 30 36 42 48	12 15 18 24 30 48	36																																
LALT 42+55	29 LT	0000																																																	54	REMOVE PIPE OR FILL W/FLOWABLE FILL
LALT 44+39	9 LT	0000																																																	27	REMOVE PIPE OR FILL W/FLOWABLE FILL
LALT 44+88	1 LT	0000																																																	26	REMOVE PIPE OR FILL W/FLOWABLE FILL
LALT 46+80	7 LT	0000																																																	51	REMOVE PIPE OR FILL W/FLOWABLE FILL
LALT 59+11	0 CL	0000																																																	46	REMOVE PIPE OR FILL W/FLOWABLE FILL
LALT 65+38	51 RT	0000																																																	128	REMOVE PIPE OR FILL W/FLOWABLE FILL
LALT 44+29	45 LT	0000																																																0.029		
LALT 18+77	74 LT	0000																																																0.065		
LALT 19+92	18 LT	0000																																																0.065		
LALT 65+09	20 LT	0000																																																0.182		
LALT 65+26	22 RT	0000																																																0.182		
LALT 65+24	16 RT	0000																																																0.182		
LALT 65+67	20 LT	0000																																																0.182		
LALT 19+94	30 RT	0000																																																0.045		
LALT 19+96	15 LT	0000																																																0.045		
LALT 19+97	20 LT	0000																																																0.045		
LALT 20+30	59 LT	0000																																																0.045		
LALT 20+34	60 LT	0000																																																0.045		
LALT 20+58	60 LT	0000																																																0.045		
LALT 25+08	17 RT	0000																																																0.045		
LALT 25+07	43 RT	0000																																																0.045		
LALT 31+27	52 LT	0000																																																0.065		
LALT 31+08	2 LT	0000																																																0.065		
LALT 31+37	55 LT	0000																																																0.116		
LALT 31+65	54 LT	0000																																																0.116		
LALT 31+95	53 LT	0000																																																0.182		
LALT 31+69	54 LT	0000																																																0.182		
LALT 31+36	52 LT	0000																																																0.065		
LALT 31+25	52 RT	0000																																																0.065		
LALT 33+78	69 LT	0000																																																0.116		
LALT 36+54	25 LT	0000																																																0.045		
LALT 33+78	70 LT	0000																																																0.116		
LALT 36+54	25 LT	0000																																																0.045		
LALT 36+49	18 LT	0000																																																0.045		
LALT 36+10	45 RT	0000																																																0.045		
LALT 36+53	21 LT	0000																																																0.045		
LALT 37+02	36 LT	0000																																																0.045		
LALT 36+74	101 LT	0000																																																0.045		
LALT 40+56	61 LT	0000																																																0.065		
LALT 40+42	3 LT	0000																																																0.065		
LALT 42+48	49 LT	0000																																																0.045		
LALT 42+51	51 LT	0000																																																0.182		
LALT 42+63	10 LT	0000																																																0.045		
LALT 43+50	12 LT	0000																																																0.182		
LALT 44+49	27 RT	0000																																																0.029		
LALT 45+01	42 LT	0000																																																0.029		
LALT 44+75	41 RT	0000																																																0.029		
LALT 46+92	35 LT	0000																																																0.045		
LALT 46+67	21 RT	0000																																																0.045		
LALT 59+10	18 LT	0000																																																0.029		
						SHEET TOTALS																																													3.440	332	

ABBREVIATIONS

C.A.A.	CORRUGATED ALUMINIUM ALLOY
C.B.	CATCH BASIN
C.S.	CORRUGATED STEEL
D.I.	DROP INLET
G.D.I.	GRATED DROP INLET
H.D.P.E.	HIGH DENSITY POLYETHYLENE
J.B.	JUNCTION BOX
M.H.	MANHOLE
N.S.	NARROW SLOT
P.V.C.	POLYVINYL CHLORIDE
R.C.	REINFORCED CONCRETE
T.B.D.I.	TRAFFIC BEARING DROP INLET
T.B.J.B.	TRAFFIC BEARING JUNCTION BOX
W.S.	WIDE SLOT

RD266193

COMPUTED BY: L. JAH DATE: 01/12/2015

CHECKED BY: A.K. WHITE DATE: 11/16/2015

NORTH CAROLINA DEPARTMENT OF TRANSPORTATION
DIVISION OF HIGHWAYS

PROJECT NO.	SHEET NO.
U-3308	3D-11

Note: Invert Elevations indicated are for Bid Purposes only and shall not be used for project construction stakeout.
See "Standard Specifications For Roads and Structures, Section 300-5".

LIST OF PIPES, ENDWALLS, ETC. (FOR PIPES 48 INCHES & UNDER)

ABBREVIATIONS
- **C.A.A.** CORRUGATED ALUMINIUM ALLOY
- **C.B.** CATCH BASIN
- **C.S.** CORRUGATED STEEL
- **D.I.** DROP INLET
- **G.D.I.** GRATED DROP INLET
- **H.D.P.E.** HIGH DENSITY POLYETHYLENE
- **J.B.** JUNCTION BOX
- **M.H.** MANHOLE
- **N.S.** NARROW SLOT
- **P.V.C.** POLYVINYL CHLORIDE
- **R.C.** REINFORCED CONCRETE
- **T.B.D.I.** TRAFFIC BEARING DROP INLET
- **T.B.J.B.** TRAFFIC BEARING JUNCTION BOX
- **W.S.** WIDE SLOT

LINE & STATION / SIZE / THICKNESS OR GAUGE	OFFSET		STRUCTURE NUMBER FROM	TO	TOP ELEVATION FT.	INVERT ELEVATION FT.	INVERT ELEVATION FT.	MINIMUM REQUIRED SLOPE %	Drainage Pipe (RCP, CSP, CAAP, HDPE, or PVC)	15	18		DO NOT USE RCP	DO NOT USE CSP	DO NOT USE CAAP	DO NOT USE HDPE	DO NOT USE PVC	C. S. PIPE 12 .064	15 .064	18 .064											R. C. PIPE CLASS IV	15	18	24	30	36	42	48		R. C. PIPE CLASS V 12	15	18	24	30	48		BIT COAT CORRUGATED METAL PIPE 36							ENDWALLS STD. 838.01 OR STD. 838.11 (UNLESS NOTED OTHERWISE) CY	REINFORCED ENDWALLS CY	DRAINAGE STRUCTURE MASONRY CY	QUANTITIES FOR DRAINAGE STRUCTURES (NOTE: TOTAL LIN. FT. FOR PAY QUANTITY SHALL BE A + (1.3 X B)) 0' THRU 5' EACH	A 5' THRU 10' LIN. FT.	B 10' AND ABOVE LIN. FT.	C.B. STD. 840.01 OR STD. 840.02	FRAME, GRATES, AND HOOD STD. 840.03 GRATE TYPE E	F	G		CONCRETE TRANSITIONAL SECTION D.I. STD. 852.04 OR STD. 852.06		OPEN THROAT C.B. STD. 840.04 OR STD. 840.05	D.I. STD. 840.14 OR STD. 840.15	D.I. FRAME AND GRATES STD. 840.16	T.B.D.I. 840.36	T.B.D.I. FRAME AND GRATE 840.37	DRIVEWAY D.I. STD. 840.30	FRAME W/ GRATE FOR DRIVEWAY STD. 840.30	J.B. STD. 840.31 OR STD. 840.32	T.B.J.B. STD. 840.34		M.H. FRAME AND COVER STD. 840.54	CONVERT EXISTING C.B. TO J.B.	CONVERT EXISTING D.I. TO J.B.		CS PIPE ELBOWS NO. & SIZE	FLOWABLE FILL CY	CONCRETE COLLARS CL. "B" STD. 840.72 CY	CONCRETE AND BRICK PIPE PLUG STD. 840.71 CY	PIPE REMOVAL LIN. FT.	REMARKS
LALT 59+11	16	RT	0000																																																																																	0.029		
LALT 65+51	80	RT	0000																																																																																	0.182		
LALT 65+51	16	RT	0000																																																																																	0.182		
LALT 40+66	33	RT	0000																																																																																		29	
LALT 40+71	78	RT	0000																																																																																		62	
LALT 29+73	14	RT	0000																																																																																		252	
LALT 40+54	90	LT	0000																																																																																		49	
LALT 59+06	26	RT	0000																																																																																		16	
LALT 65+73	34	LT	0000																																																																																		26	
LALT 15+05	331	LT	0000																																																																																		135	
LALT 18+81	37	LT	0000																																																																																		22	
LALT 26+77	15	RT	0000																																																																																		335	
LALT 31+04	6	RT	0000																																																																																		14	
LALT 30+91	58	LT	0000																																																																																		72	
LALT 31+31	54	LT	0000																																																																																		6	
LALT 31+30	68	LT	0000																																																																																		24	
LALT 31+35	108	LT	0000																																																																																		103	
LALT 33+30	62	LT	0000																																																																																		87	
LALT 37+51	53	LT	0000																																																																																		104	
LALT 36+52	23	LT	0000																																																																																		1	
LALT 40+52	8	RT	0000																																																																																		28	
LALT 42+85	17	RT	0000																																																																																		25	
LALT 42+69	3	RT	0000																																																																																		20	
LALT 44+38	24	RT	0000																																																																																		20	
LALT 46+56	38	LT	0000																																																																																		70	
LALT 46+64	75	RT	0000																																																																																		101	
LALT 44+60	38	RT	0000																																																																																		24	
LALT 44+02	10	RT	0000																																																																																		105	
LALT 53+16	19	LT	0000																																																																																		124	
LALT 54+08	22	LT	0000																																																																																		55	
LALT 65+04	28	LT	0000																																																																																		13	
Y 25+05	0	CL	0000																																																																																		54	
LALT 22+26	707	RT	0000																																																																																		4	
-LALT-																																																																																					50				CONTINGENCY FLOWABLE FILL
NSR/CSX																																																																																								207	SEE TRACK PLANS
NSR/CSX DETOUR											68			X	X	X	X			54																						120					116							3.500			3													3	4			2			2						0.4500		60	SEE TRACK PLANS
SHEET TOTALS											68									54																						120					116							3.500			3													3	4			2			2					50	0.4500	0.393	2247	
PROJECT TOTALS										68	68								184	54												6796	704	1912	476	204	1108	84			344	120					116							3.500			216	59.7		156	23	66	67		14		2	47	47	3	4	1	36	4	5		11	1	1		2	50	0.4500	3.833	3558	

RD266193

COMPUTED BY: L. JAH DATE: 01/12/2015

CHECKED BY: A.K. WHITE DATE: 11/16/2015

PROJECT NO.	SHEET NO.
U-3308	3D-12

NORTH CAROLINA DEPARTMENT OF TRANSPORTATION
DIVISION OF HIGHWAYS

**Note: Invert Elevations indicated are for Bid Purposes only and shall not be used for project construction stakeout.
See "Standard Specifications For Roads and Structures, Section 300-5".**

LIST OF PIPES, ENDWALLS, ETC. (FOR PIPES 54 INCHES & OVER)

LINE & STATION	OFFSET		STRUCTURE NUMBER FROM	STRUCTURE NUMBER TO	TOP ELEVATION FT.	INVERT ELEVATION FT.	INVERT ELEVATION FT.	MINIMUM REQUIRED SLOPE %	R. C. PIPE CLASS IV 54	R. C. PIPE CLASS IV 72	REINFORCED ENDWALLS CY	DRAINAGE STRUCTURE MASONRY CY	C.B. STD. 840.01 OR STD. 840.02	GRATE TYPE E	GRATE TYPE F	GRATE TYPE G	D.I. STD. 840.14 OR STD. 840.15	D.I. FRAME AND GRATES STD. 840.16	T.B.J.B. STD. 840.34	M.H. FRAME AND COVER STD. 840.54	REMARKS
LALT 43+16	35	RT	0839		353.9							2.387	1		1						
			0839	0901		344.9	344.6		108												
LALT 42+53	35	RT	0842		355.3							2.387	1		1						
			0842	0839		345.1	344.9		64												
LALT 44+26	35	RT	0901		351.0							2.387	1		1						
			0901	0912		344.6	343.8		132												SEE DETAIL 2C-21 FOR TEMP CONNECTION
												2.700	1		1						SEE DETAIL 2C-21 FOR TEMP CONNECTION
LALT 47+50	35	RT	0910		352.9							2.387	1			1					
			0910	1018		343.3	342.9		108												
LALT 45+58	35	RT	0912		350.3							2.387	1	1							
			0912	0910		343.8	343.3		192												
Y15 10+73	19	RT	1004		352.4							2.387	1		1						
			1004	1005		342.1	340.0	0.3	36												
Y15 10+78	19	LT	1005		351.9							2.387	1			1					
			1005	1008		339.1	335.1	0.3	132												
Y15 12+12	20	LT	1008		341.4							2.387	1	1							
			1008	1009		335.1	335.0	0.3	16												
Y15 12+30	18	LT	1009		341.7							2.387					1	1			
			1009	2001		335.0	333.5	0.4	344												
LALT 48+54	37	RT	1018		354.7							2.387							1	1	
			1018	1004		342.3	342.1	0.3	36												
LALT 52+48	56	LT	1019		345.0						7.100										
			1019	1013		334.0	333.7			92											
L 52+55	26	RT	1013		345.6							7.200				1					SEE DETAIL 2C-8
SHEET TOTALS									1168	92	7.100	33.770	9	2	5	3	1	1	1	1	
PROJECT TOTALS									1168	92	7.100	33.770	9	2	5	3	1	1	1	1	

Other column headings (no entries on this sheet): SIZE; THICKNESS OR GAUGE; Drainage Pipe (RCP, CSP, CAAP, HDPE, or PVC) — DO NOT USE RCP, DO NOT USE CSP, DO NOT USE CAAP, DO NOT USE HDPE, DO NOT USE PVC; C. S. PIPE; R. C. PIPE CLASS IV 60, 66, 78, 84; R. C. PIPE CLASS V 54, 60, 66, 72, 78, 84; STRUCTURAL PLATE PIPE 60, 66, 72; ENDWALLS STD. 838.01 OR STD. 838.11 (UNLESS NOTED OTHERWISE) CY; QUANTITIES FOR DRAINAGE STRUCTURES (NOTE: TOTAL LIN. FT. FOR PAY QUANTITY SHALL BE A + (1.3 X B)) — 0' THRU 5' EACH, A 5' THRU 10' LIN. FT., B 10' AND ABOVE LIN. FT.; FRAME, GRATES, AND HOOD STD. 840.03; CONCRETE TRANSITIONAL SECTION — D.I. STD. 852.04 OR STD. 852.06, C.B. STD. 852.05; T.B.D.I. STD. 840.35; T.B.D.I. FOR STEEL GRATES STD. 840.36; STEEL FRAME WITH TWO GRATES STD. 840.37; M.H. STD. 840.51, STD. 840.52, OR STD. 840.53; CONVERT EXISTING C.B. TO J.B.; CONVERT EXISTING C.B. TO D.I.; CONVERT EXISTING D.I. TO J.B.; CONVERT EXISTING J.B. TO D.I.; ADJUST C.B.; ADJUST D.I.; ENERGY DISSIPATION BASIN; FLOWABLE FILL CY; CONCRETE COLLARS CL. "B" STD. 840.72 CY; CONCRETE AND BRICK PIPE PLUG STD. 840.71 CY; PIPE REMOVAL LIN. FT.

ABBREVIATIONS

C.A.A.	CORRUGATED ALUMINIUM ALLOY
C.B.	CATCH BASIN
C.S.	CORRUGATED STEEL
D.I.	DROP INLET
G.D.I.	GRATED DROP INLET
H.D.P.E.	HIGH DENSITY POLYETHYLENE
J.B.	JUNCTION BOX
M.H.	MANHOLE
N.S.	NARROW SLOT
P.V.C.	POLYVINYL CHLORIDE
R.C.	REINFORCED CONCRETE
T.B.D.I.	TRAFFIC BEARING DROP INLET
T.B.J.B.	TRAFFIC BEARING JUNCTION BOX
W.S.	WIDE SLOT

SUMMARY OF SUBSURFACE DRAINAGE

LINE	STATION	STATION	LOCATION LT/RT/CL	DRAIN TYPE* UD/BD/SD	LF
	CONTINGENCY			UD	1,000
				TOTAL LF	1,000

*UD = UNDERDRAIN
*BD = BLIND DRAIN
*SD = SUBSURFACE DRAIN

SUMMARY OF GEOTEXTILE FOR PAVEMENT STABILIZATION

LINE	STATION	STATION	OFFSET	SY
	CONTINGENCY			5,000
			TOTAL SY	5,000

SUMMARY OF AGGREGATE SUBGRADE/STABILIZATION

LINE	STATION	STATION	Aggregate Type ASU/AST	Aggregate Thickness INCHES	Shallow Undercut CY	Class IV Subgrade Stabilization TONS	Geotextile for Soil Stabilization SY	Stabilizer Aggregate TONS	Class IV Aggregate Stabilization
–LALT–	36+40.00	38+15.00	ASU	12"	450	900	1350		
	CONTINGENCY		ASU	12"	1000	1900	3000		
	CONTINGENCY		AST					500	
				TOTAL CY/TONS	1450	2800	4350*	500	

AST = AGGREGATE STABILIZATION
ASU = AGGREGATE SUBGRADE

*Total square yards of Geotextile for Soil Stabilization is only the estimated quantity for ASU/AST and may only represent a portion of the geotextile quantity

5/14/99
19-MAY-2015 15:47
R:\Roadway\Proj\u3308_rdy_sum.dgn
$$$$USERNAME$$$$

PROJECT REFERENCE NO.	SHEET NO.
U-3308	3P-1

STATE OF NORTH CAROLINA
DIVISION OF HIGHWAYS

PARCEL INDEX SHEET

PARCEL No.	SHEET No.	PROPERTY OWNER NAME
10	4	RALPH & ELVIRA HUNT (NO CLAIM)
11	4	RUSSELL MEMORIAL CHRISTIAN METHODIST EPISCOPAL (NO CLAIM)
12	4	RUSSELL MEMORIAL CHRISTIAN METHODIST EPISCOPAL (NO CLAIM)
13	4	KARIS INC (NO CLAIM)
14	4	JOYNER ENTERPRISES, INC. (NO CLAIM)
15	4	CITY OF DURHAM (NO CLAIM)
16	4	NC STATE HIGHWAY COMMISSION (NO CLAIM)
17	4	CITY OF DURHAM
18	4	FILEMON AGUILERA
19	4, 5, 5A, 15, & 15A	FOWLER INC. M M
20	4, 5, 5A, 16, & 16A	RESEARCH TRIANGLE REGIONAL PUBLIC TRANSPORTATION AUTHORITY
21	5, 5A, & 6	SOUTHERN REPAIR SERVICE, INC.
22	5 & 5A	NCDOT
23	5 & 5A	LENORA HILLIARD
24	5, 5A, & 6	LOVETT SQUARE LIMITED PARTNERSHIP
25	6	JOSE & NORA SANDOVAL (NO CLAIM)
26	6	MAXINE W. OWENS
27	6	TRUSTEES OF ASBURY TEMPLE UNITED METHODIST CHURCH
28	6	ASBURY TEMPLE UNITED METHODIST CHURCH
29	6 & 7	RESCUE MISSION MINISTRIES INC
30	6 & 7	CITY OF DURHAM
31	7	FRANK C. FELDER & JOHN C. BLACKWOOD
32	7	CLAYBORNE L. EVANS (NO CLAIM)
33	7	JOHN C. BLACKWOOD & FRANK CHRISTIAN FELDER
34	7	MARY E. PARKER (NO CLAIM)
35	7	FRANK C. FELDER
36	7	CLAYBORNE L. EVANS (NO CLAIM)
37	7	KOOLWATER LLC
38	7	STEVENSON ROCHELLE
39	7, 8 & 18	RESCUE MISSION MINISTRIES INC
40	7 & 8	KHAWAJA LLC
43	8	AHMED SADEO & ABDULLA AL-QASEM
45	8	VINSTON BRASWELL
46	8 & 9	RESCUE MISSION MINISTRIES, INC.
47	8 & 9	JOHNNIE L. & ETHEL CRAWFORD
49	9	RESCUE MISSION MINISTRIES INC.
50	9	MARGARITA MENDEZ FLORES
51	9	RESCUE MISSION MINISTRIES INC.
52	9	THOMAS H. FOWLER
53	9	TERRY WAYNE FISHER
54	9	GUY E. HURLEY
55	10	MAXINE W. OWENS
56	10	RALPH E. OWENS
57	10, 11, 20, & 23	DURHAM PUBLIC SCHOOLS BOARD OF EDUCATION

PARCEL No.	SHEET No.	PROPERTY OWNER NAME
58	10	JEROME SMITH
58A	10	JEROME SMITH & HAROLD SMITH
59	10	ECCLESIA HOUSE OF PRAYER INC.
60	10 & 11	SOUTHERN REPAIR SERVICE INC.
61	11	M.M. FOWLER INC.
62	11	ECCLESIA COMMUNITY DEVELOPMENT
63	11	LEO'S SEAFOOD OF DURHAM L.D.R. INC.
64	11	ALI A. ISSA
65	11, 12, & 23	THE SALVATION ARMY
65A	11 & 12	CITY OF DURHAM
66	11 & 12	SHAKEEL AHMAD & WAHEEDA J. ALI
67	12	HENRY M. & GLENN CHERRY
68	12	SAMI & SENGDEUANE HANNA
68A	12	CITY OF DURHAM
69	12	EARL M. & DELORES EVANS
70	12	CHARLES R. WELLONS FOUNDATION
70A	12	CITY OF DURHAM
71	12 & 13	ADAMS INVESTMENT CO. INC.
72	12 & 13	ERWIN DISTRIBUTING CORP INC.
73	13	YARBORO & HESSEE WAREHOUSE LLC
74	13 & 24	CITY OF DURHAM
77	4	KATHRYN Y SHEPARD (NO CLAIM)
78	4	SHARON DENISE MURRAY (NO CLAIM)
79	4	VINSTON BRASWELL (NO CLAIM)
80	4	MECHANICS & FARMERS BANK (NO CLAIM)
81	4	CITY OF DURHAM (NO CLAIM)
82	4	VEREA DENSON ET AL
83	4, 15, & 15A	EAGLE VILLAGE COMM. DEVELOPMENT (NO CLAIM)
84	15 & 15A	KELSEY PROPERTIES, LLC
85	14 & 14A	JOHN AVERY BOYS & GIRLS CLUB (NO CLAIM)
86	14 & 14A	GWENDOLYN LOUDERMILK (NO CLAIM)
87	14 & 14A	HASKELL PROPERTIES INC (NO CLAIM)
88	14 & 14A	DUANE WILLIAMS & WIFE JACOUELINE WILLIAMS (NO CLAIM)
89	14 & 14A	MERCY RUGUARU (NO CLAIM)
90	14, 14A, 15, & 15A	RONALD E. & LILLIAS COLEMAN (NO CLAIM)
91	15 & 15A	MARY H. COOKE
93	16, 16A, 17, & 17A	CITY OF DURHAM
94	17 & 17A	SOUTHERN REPAIR SERVICE INC. (NO CLAIM)
95, 96, & 97	17 & 17A	SOUTHERN REPAIR SERVICE INC. (NO CLAIM)

5/28/99
18-MAY-2016 11:44
R:\Roadway\Proj\3308_rdy_parcelindex.dgn
$$$USERNAME$$$

STATE OF NORTH CAROLINA
DIVISION OF HIGHWAYS

PARCEL INDEX SHEET

PARCEL No.	SHEET No.	PROPERTY OWNER NAME
110	6 & 7	WILLIAM R. WATSON
111	6 & 7	MANUEL ESTEBAN LOPEZ
112	6 & 7	JAMES W. PERRY
114	7 & 8	EVANGELISTIC PRAYER BAND., INC. (NO CLAIM)
118	7	RESCUE MISSION MINISTRIES, INC.
121	8 & 19	TCB–DIVI MORNING GLORY LLC
124	8 & 18	RESCUE MISSION MINISTRIES, INC.
125	18	RESCUE MISSION MINISTRIES, INC.
126	18	RESCUE MISSION MINISTRIES INC. (NO CLAIM)
127	18	KAREN A. JONES & PETER H. EDWARDS (NO CLAIM)
129	19	ALBERTA COLEMAN
130	19	BRITTANY R PEAKS
131	8	RESCUE MISSION MINISTRIES, INC.
132	8 & 19	SHANICA L. MAYES
134	8	OTHA J. & ALICE K. WILLIAMS
135	8 & 18	RESCUE MISSION MINISTRIES, INC. (NO CLAIM)
136	8 & 18	RESCUE MISSION MINISTRIES, INC. (NO CLAIM)
137, 138, & 139	18	RESCUE MISSION MINISTRIES INC. (NO CLAIM)
140	18	DURHAM RESCUE MISSION (NO CLAIM)
141	18	RESCUE MISSION MINISTRIES INC.
142	19	MARSHA Y. HENDRIX
143	19	BRENTLEY ALLEN COBB
144	19	GRACIELA SEILA
145	19	ANTHONY R. BAILEY
146	9 & 19	WILLIAM R WATSON JR
147	9	HARVEY L. & BEVERLY B. CRAIG
148	9	CEMCO INVESTMENT
149	8 & 9	GRADY T. & JOSEPHINE VEASEY
150	8	RESCUE MISSION MINISTRIES INC. (NO CLAIM)
158	21	MELISSA NORTON
159	21	PAUL J. EVANS
160	21	RESCUE MISSION MINISTRIES INC
161	21	RESCUE MISSION MINISTRIES INC
162	9 & 21	RESCUE MISSION MINISTRIES INC
163	9 & 21	JESSICA KATELYN ADAM
164	9	BILLY W. FOWLER SR.
165	9	RESCUE MISSION MINISTRIES INC
166	9	TERRY WAYNE FISHER
175	21	TOUSSAINT & SHERRI AVENT (NO CLAIM)

PARCEL No.	SHEET No.	PROPERTY OWNER NAME
176	21	TOUSSAINT & SHERRI AVENT (NO CLAIM)
177	21	LOUIS V. NIEMEYER (NO CLAIM)
178	10	WILLIE H. & EVANGELINE S. HOOD (NO CLAIM)
181	10	RALPH E. OWENS
182	10	ROBERT L. ELLIS
183	10	WILLIAM A. THOMAS
184	20	THOMAS A. DORSEY
185	20	RICHARD L. SOLES
186	20	TCB–DVI HOLMAN HOMES LLC (NO CLAIM)
187	11 & 22	SOUTHERN PINE PROPERTY
188	11	DOCK TERRELL
189	11	JEAN C. TRAWICK
190	11 & 12	CAROLYN A. BROWNING (NO CLAIM)
191	12	JEANETTE TUCKER
192	11 & 22	CREEDMORE HOLDING COMPANY LLC
200	12	JIMMIE L. & GERALDINE K. YOUNG (NO CLAIM)
202	12	DAVID MCQUEEN SR.
203	12 & 13	DAVID MCQUEEN SR.
204	12 & 24	THE EMIEL AUBREY GOOCH JR. REVOCABLE TRUST
205	24	TERRY L. YARBOROUGH
206	24	BUCKHEAD MANAGEMENT GROUP, LLC
207	24	DAVID MCQUEEN SR.
208	23 & 24	CITY OF DURHAM
210	24	YARBORO & HESSEE WAREHOUSE LLC (NO CLAIM)
211	22	PATRICIA ANN REAMS
212	22	CHURCH OF THE APOSTOLIC REVIVAL

5/28/99
07-MAY-2015 14:10
R:\Roadway\Proj\3308_rdy_parcelindex.dgn
$$USERNAME$$

REVISIONS

PROJECT REFERENCE NO.	SHEET NO.
U-3308	4
R/W SHEET NO.	

ROADWAY DESIGN ENGINEER — Certified by: Jason S. Pell, PE — Date: 5/26/2016

HYDRAULICS ENGINEER — Certified by: Mark A. Pelkey, PE — Date: 5/26/2016

2015 ADT
2035 ADT
(in 100's)

NC 147: 856/1004 — 56/67, 47/58 — 250/324 — 16/23, 15/21 — 712/842
-Y3-: 32/38 — 8/10 — 214/284 — 16/23, 12/18
-LALT-: 21/25 — 31/44

NOTE 1: REMOVE PIPE OR FILL WITH FLOWABLE FILL

(17) CITY OF DURHAM DB 312 PG 131
(80) MECHANICS & FARMERS BANK DB 2734 PG 941
(81) CITY OF DURHAM DB 314 PG 609

-LALT-
PI Sta 18+92.86
Δ= 1° 56' 11.5" (LT)
D = 0° 42' 58.3"
L = 270.39'
T = 135.21'
R = 8,000.00'

-R1-
PI Sta 12+94.81
Δ= 28° 10' 35.6" (LT)
D = 8° 34' 38.0"
L = 328.50'
T = 167.64'
R = 668.00'
SE = 0.04

-YA-
PI Sta 11+52.51
Δ= 6° 15' 45.8" (LT)
D = 2° 05' 00.5"
L = 300.59'
T = 150.44'
R = 2,750.00'

-R3-
PI Sta 16+14.85
Δ= 18° 54' 26.0" (RT)
D = 3° 43' 48.7"
L = 506.87'
T = 255.76'
R = 1,536.00'

-R4-
PI Sta 11+49.52
Δ = 56° 33' 31.8" (RT)
D = 31° 49' 51.6"
L = 177.68'
T = 96.84'
R = 180.00'
SE = Exist.

BEGIN TIP PROJECT U-3308
-LALT- STA 12+00.00

BEGIN MILLING AND OVERLAY
-LALT- Sta.12+00.00

BEGIN CONSTRUCTION
-R1- POT Sta. 11+00.00
-R1- PC Sta. 11+27.17

END CONSTRUCTION
-R3- POC Sta. 13+60.00
-R3- PC Sta. 13+59.09

POT Sta. 10+00.00 -YA-
PC Sta. 10+02.07 -YA-

PT Sta. 13+02.66 -YA-

-LALT- POT Sta. 16+42.70 =
-YA- POT Sta. 13+31.37

-R1- PT Sta. 14+55.67

-LALT- POT Sta. 14+39.63=
-R1- POT Sta. 15+11.05

-LALT- POT Sta. 14+00.00
BEGIN GRADE
END RESURFACING

-LALT- POC Sta. 18+28.75=
-R3- POT Sta. 10+00.00

-LALT- PC Sta. 17+57.65

BEGIN RESURFACING
-Y3A- POT Sta.10+00.00=
-Y3- POT Sta.9+99.63

-Y3- POT Sta. 10+65.00
BEGIN GRADE

-LALT- POT Sta. 20+39.12
-Y3- POT Sta. 12+49.64

-LALT- PT Sta. 20+28.04

-LALT- POT Sta.20+50.00=
-R5- POT Sta. 10+00.00

-LALT- POT Sta. 14+30.60=
-R2- POT Sta. 10+00.00

-R2- POT Sta. 11+00.00
END CONSTRUCTION

-R4- PC Sta. 10+52.68

-LALT- POT Sta.17+40.00=
-R4- POT Sta. 10+00.00
31.00' Rt.

-R4- POC Sta. 12+30.00
END CONSTRUCTION

END CONSTRUCTION
-R5- POT Sta. 11+50.00

POT Sta. 15+46.91 -YA-

-LALT- STA 21+20.00 SEE SHEET 15

-Y3A- STA 10+80.00 SEE SHEET 15

NAD 83/95

Tie Proposed Guardrail To Existing Guardrail

Remove Existing Guardrail

Remove & Replace Existing Guardrail

Prop. Guardrail

End Slab STA. 17+60.20

End Bridge STA. 17+36.20

Begin Slab STA. 15+31.95

Begin Bridge STA. 15+55.95

Rem. Ex. G/R

Convert Prop. Conc. Island

30' R SC Thrie Beam (See Detail 2C-16)

Type-III Anchor

Prop. 5' Sidewalk

Prop. 6' Sidewalk

Prop. 2'6" C&G

Tie To Exist Sidewalk

TIE PROP 5' SIDEWALK TO EXIST SIDEWALK

TIE PROP 5' SW TO EXIST SW +50.00 -LALT- Exist. R/W

BEGIN PROP 2'6" C&G -LALT- 13+50

NOTE 1: REMOVE PIPE OR FILL WITH FLOWABLE FILL

NO CLAIM
KATHRYN Y. SHEPARD DB 1461 PG 677

SHARON DENISE MURRAY DB 2002-E PG 429

NO CLAIM
CITY OF DURHAM DB 321 PG 126

KARIS INC. DB 3201 PG 144

RALPH & ELVIRA HUNT DB 1811 PG 20

RUSSELL MEMORIAL CHRISTIAN METHODIST EPISCOPAL CHURCH DB 1524 PG 221

JOYNER ENTERPRISES INC. DB 1065 PG 407

NC STATE HIGHWAY COMMISSION DB 326 PG 294

VINSTON BRASWELL DB 1019 PG 999

CENTER INVESTMENT CORPORATION DB 6852 PG 592

FOWLER INC. M DB 311 PG 44

NO CLAIM

NOTE: See Pavement Marking Plans for Curb Ramp Stations

FOR –LALT– PROFILE SEE SHEET 25
FOR –Y3– PROFILE SEE SHEET 32
FOR –Y3A– PROFILE SEE SHEET 32
FOR –R1– PROFILE SEE SHEET 38
FOR –R2– PROFILE SEE SHEET 38
FOR –R3– PROFILE SEE SHEET 38
FOR –R4– PROFILE SEE SHEET 39
FOR –R5– PROFILE SEE SHEET 39
FOR PAVEMENT–BRIDGE RELATIONSHIP OF –LALT– OVER –YA– SEE SHEET 2A–15
FOR CURB RAMP DETAILS SEE DETAIL SHEETS 2C–1 THRU 2C–4
FOR INTERSECTION DETAILS SEE SHEET 2B–1 THRU 2B–5
FOR STRUCTURE PLANS SEE SHEETS S–1 THRU S–79
NOTE 1: REMOVE PIPE OR FILL WITH FLOWABLE FILL

Retain and Upgrade Existing Traffic Signal
Pavement Removal
Bridge Approach Slab
Concrete Island or Sidewalk

GRAPHIC SCALE 20 10 0 20 40 PLANS

LOCATION:
TIP NO.: COUNTY:
DESIGNED BY:
CHECKED BY: DATE:

PROJECT REFERENCE NO.	SHEET NO.
U-3308	5
R/W SHEET NO.	

ROADWAY DESIGN ENGINEER NORTH CAROLINA PROFESSIONAL SEAL 014571 ENGINEER James A. Speer — DocuSigned James Speer 4/13/2016

HYDRAULICS ENGINEER NORTH CAROLINA PROFESSIONAL SEAL 019721 ENGINEER WILLIAM H. ELAM — DocuSigned Wm H. Elam 4/14/2016

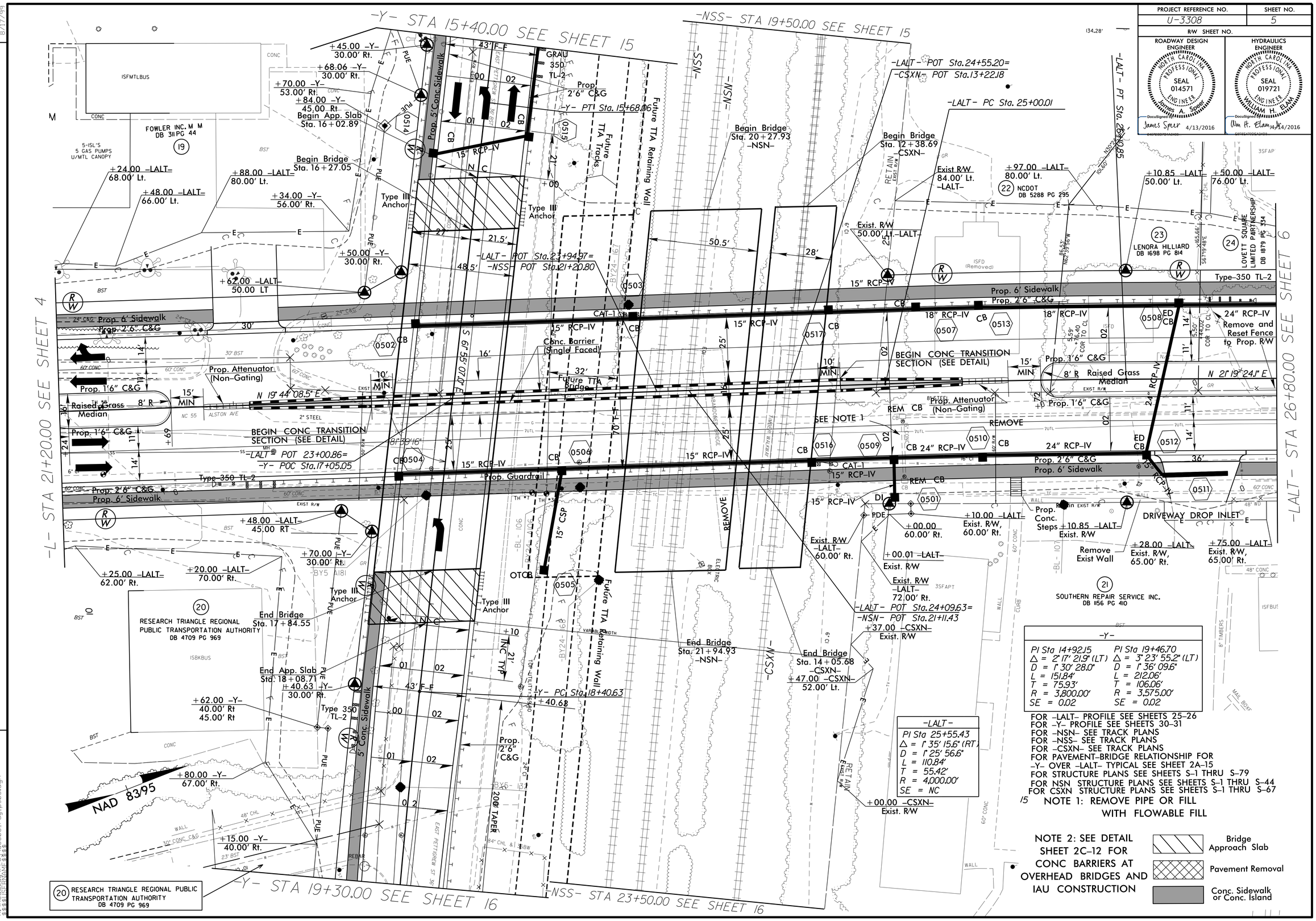

-Y-	
PI Sta 14+92.15	PI Sta 19+46.70
Δ = 2° 17' 21.9" (LT)	Δ = 3° 23' 55.2" (LT)
D = 1° 30' 28.0"	D = 1° 36' 09.6"
L = 151.84'	L = 212.06'
T = 75.93'	T = 106.06'
R = 3,800.00'	R = 3,575.00'
SE = 0.02	SE = 0.02

-LALT-
PI Sta 25+55.43
Δ = 1° 35' 15.6" (RT)
D = 1° 25' 56.6"
L = 110.84'
T = 55.42'
R = 4,000.00'
SE = NC

FOR -LALT- PROFILE SEE SHEETS 25-26
FOR -Y- PROFILE SEE SHEETS 30-31
FOR -NSN- SEE TRACK PLANS
FOR -NSS- SEE TRACK PLANS
FOR -CSXN- SEE TRACK PLANS
FOR PAVEMENT-BRIDGE RELATIONSHIP FOR -Y- OVER -LALT- TYPICAL SEE SHEET 2A-15
FOR STRUCTURE PLANS SEE SHEETS S-1 THRU S-79
FOR NSN STRUCTURE PLANS SEE SHEETS S-1 THRU S-44
FOR CSXN STRUCTURE PLANS SEE SHEETS S-1 THRU S-67

15 NOTE 1: REMOVE PIPE OR FILL WITH FLOWABLE FILL

NOTE 2: SEE DETAIL SHEET 2C-12 FOR CONC BARRIERS AT OVERHEAD BRIDGES AND IAU CONSTRUCTION

Bridge Approach Slab
Pavement Removal
Conc. Sidewalk or Conc. Island

REVISIONS

8/17/99

13-APR-2016 11:08
R:\Roadway\Proj\3308_rdy_ps05.dgn

PROJECT REFERENCE NO.	SHEET NO.
U-3308	6
R/W SHEET NO.	

ROADWAY DESIGN ENGINEER — NORTH CAROLINA PROFESSIONAL SEAL 014571 ENGINEER James A. Speer — DocuSigned by: James Speer 11/24/2015

HYDRAULICS ENGINEER — NORTH CAROLINA PROFESSIONAL SEAL 019721 ENGINEER WILLIAM H. ELAM — DocuSigned by: Wm. H. Elam, Jr. 11/23/2015

8/17/99

REVISIONS

2015 ADT
2035 ADT
(in 100's)

-Y1- 18/36
-LALT- 214/284
178/214
8/19 1/2 36/59 7/6
-Y2- 52/80

NOTE 1: REMOVE PIPE OR FILL WITH FLOWABLE FILL

NAD 83/95

-Y1- POT Sta.11+00.00
BEGIN CONSTRUCTION

+00.00 -Y1-
Exist R/W,
29.00' Rt.

+12.00 -Y1-
Exist. R/W,
45.00' Lt

Do Not Disturb
Exist. Fence
+85.00 -Y1-
Exist. R/W

Prop. TCE
30.00' Rt.

+95.00 -Y1-
Exist. R/W

30 -LALT- POT Sta. 31+51.44
-Y1- POT Sta.12+73.92

-Y2- POT Sta.10+16.56=
-LALT- POT Sta. 31+50.12

+93.00 -LALT-
50.00',
67.00',
81.00' Lt.

+05.00 -LALT-
50.00' Lt.

REMOVE

Remove and Reset Fence
to Prop. R/W

+00.00 -LALT-
66.00' Lt.

+50.00 -LALT-
67.00' Lt.

+93.00 -LALT-
61.00' Lt.

+50.00 -LALT-
64.00' Lt.

+02.00 -LALT-
55.00',
62.00' Lt.

+80.00 -Y1-
Exist. R/W,
31.00',
45.00' Lt.

+39.00 -LALT-
50.00', 60.00' Lt.

+49.00 -LALT-
50.00', 60.00' Lt.

+60.00 -LALT-
65.00' Lt.

+95.00 -Y1-
Exist. R/W
+97.00 -Y1-
32.00' Lt.

+00.00 -LALT-
50.00' Lt.

+08.00 -LALT-
54.00' Lt.

Remove Existing Wall

Tie to Exist. Sidewalk

Prop. 6' Sidewalk
Prop. 2'6" C&G

24" RCP-IV

30" RCP-IV

36" RCP-IV

15" RCP-IV

Prop. 5' Sidewalk

Prop. 2'6" C&G

Prop. 1'6" C&G

Raised Grass Median

150' Left Turn Lane

190' Left Turn Lane

Prop. 5' Conc. Island

N 21°19' 24.1" E

100' TAPER
15" RCP-IV

Prop. 2'6" C&G
Prop. 6' Sidewalk

Remove Exist. Sidewalk

Retain Exist R/W

TIE TO EXIST. STEPS

HISTORIC PROPERTY LIMITS

SOD AREA AFTER SIDEWALK REMOVAL

Do Not Disturb
Exist. Wall
+00.00 -LALT-
Exist. R/W

Do Not Disturb
Exist. Steps
+80.00 -Y2-
32.00' Rt.

Do Not Disturb
Exist. Wall
+00.00 -Y2-
Exist. R/W

Tie to Exist. Sidewalk

+82.00 -LALT-
Prop. R/W

-BL- 109
-BYII- BI09

+80.00 -Y2-
Exist. R/W

+00.00 -Y2-
Exist. R/W

15" RCP-IV
+93.00 -LALT-
Exist. R/W

Conc. Sidewalk or Conc. Island

RETAIN AND UPGRADE EXISTING TRAFFIC SIGNAL

FOR -LALT- PROFILE SEE SHEET 26
FOR -Y1- PROFILE SEE SHEET 31
FOR -Y2- PROFILE SEE SHEET 31
FOR CURB RAMP DETAILS SEE SHEETS 2C-1 THRU 2C-4
FOR INTERSECTION DETAIL SEE SHEET 2B-2
NOTE: See Pavement Marking Plans for Curb Ramp Stations

END CONSTRUCTION
-Y2- POT Sta. 11+00.00

-LALT- STA 26+80.00 SEE SHEET 5

-LALT- STA 32+65.00 SEE SHEET 7

(24) LOVETT SQUARE LIMITED PARTNERSHIP DB 1879 PG 334

(26) MAXINE W. OWENS DB 1643 PG 674

(110) WILLIAM R. WATSON DB 2713 PG 963

(111) MANUEL ESTEBAN LOPEZ DB 5728, PG 353

(112) JAMES W. PERRY DB 5633, PG 114

(21) SOUTHERN REPAIR SERVICE INC. DB 1156 PG 410

(25) NO CLAIM JOSE & NORA SANDOVAL DB 2283 PG 573

(27) TRUSTEES OF ASBURY TEMPLE UNITED METHODIST CHURCH 9 PG 548

(28) ASBURY TEMPLE UNITED METHODIST CHURCH DB 3166 PG 551

(30) CITY OF DURHAM DB 337 PG 354

(29) RESCUE MISSIONS MINISTRIES INC DB 6775 PG 531

23-NOV-2015 10:45
R:\Roadway\Proj\U3308_rdy_ps06.dgn
$$USERNAME$$

PROJECT REFERENCE NO.	SHEET NO.
U-3308	7
R/W SHEET NO.	

ROADWAY DESIGN ENGINEER NORTH CAROLINA PROFESSIONAL SEAL 014571 ENGINEER — DocuSigned by: James A. Speer — James Speer 5/26/2016

HYDRAULICS ENGINEER NORTH CAROLINA PROFESSIONAL SEAL 019721 ENGINEER — DocuSigned by: WILLIAM H. ELAM — Wm. H. Elam 5/26/2016

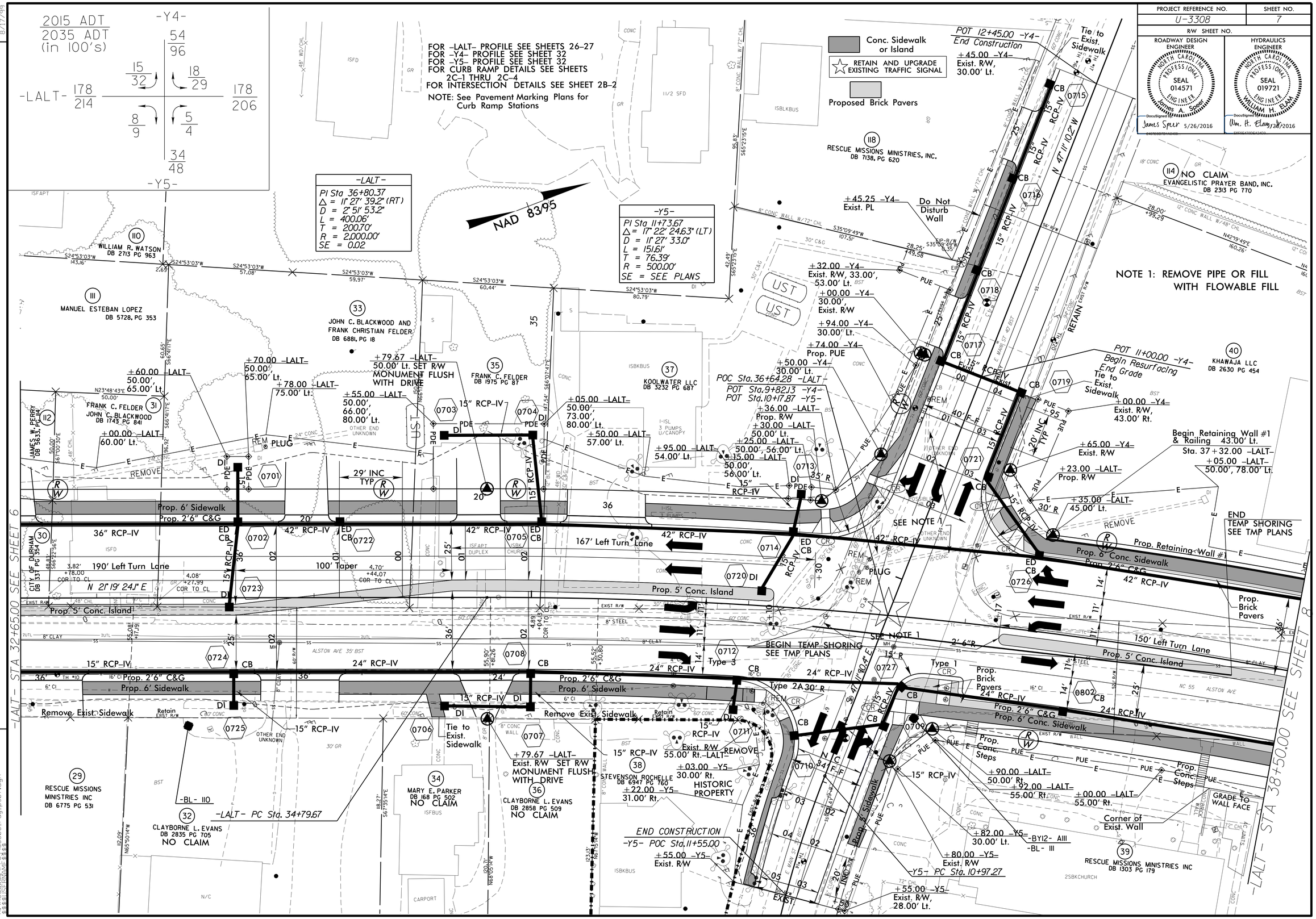

PROJECT REFERENCE NO.	SHEET NO.
U-3308	8
R/W SHEET NO.	

ROADWAY DESIGN ENGINEER
NORTH CAROLINA PROFESSIONAL SEAL 014571 ENGINEER James A. Speer
DocuSigned by: James Speer 5/10/2016

HYDRAULICS ENGINEER
NORTH CAROLINA PROFESSIONAL SEAL 019721 ENGINEER WILLIAM H. ELAM
DocuSigned by: Wm. H. Elam 5/10/2016

NOTE 1: REMOVE PIPE OR FILL WITH FLOWABLE FILL

FOR -LALT- PROFILE SEE SHEET 27-28
FOR -Y6- PROFILE SEE SHEET 33
FOR -Y7- PROFILE SEE SHEET 33
FOR -Y8- PROFILE SEE SHEET 33
FOR -Y9- PROFILE SEE SHEET 33
FOR CURB RAMP DETAILS SEE SHEET 2C-1 THRU 2C-4
FOR INTERSECTION DETAILS SEE SHEET 2B-3
NOTE: See Pavement Marking Plans for Curb Ramp Stations

Conc. Sidewalk or Island
Pavement Removal
Proposed Brick Pavers

-LALT-
PI Sta 41+61.71
Δ = 10° 22' 41.7" (LT)
D = 2° 51' 53.2"
L = 362.27'
T = 181.63'
R = 2,000.00'
SE = 0.02

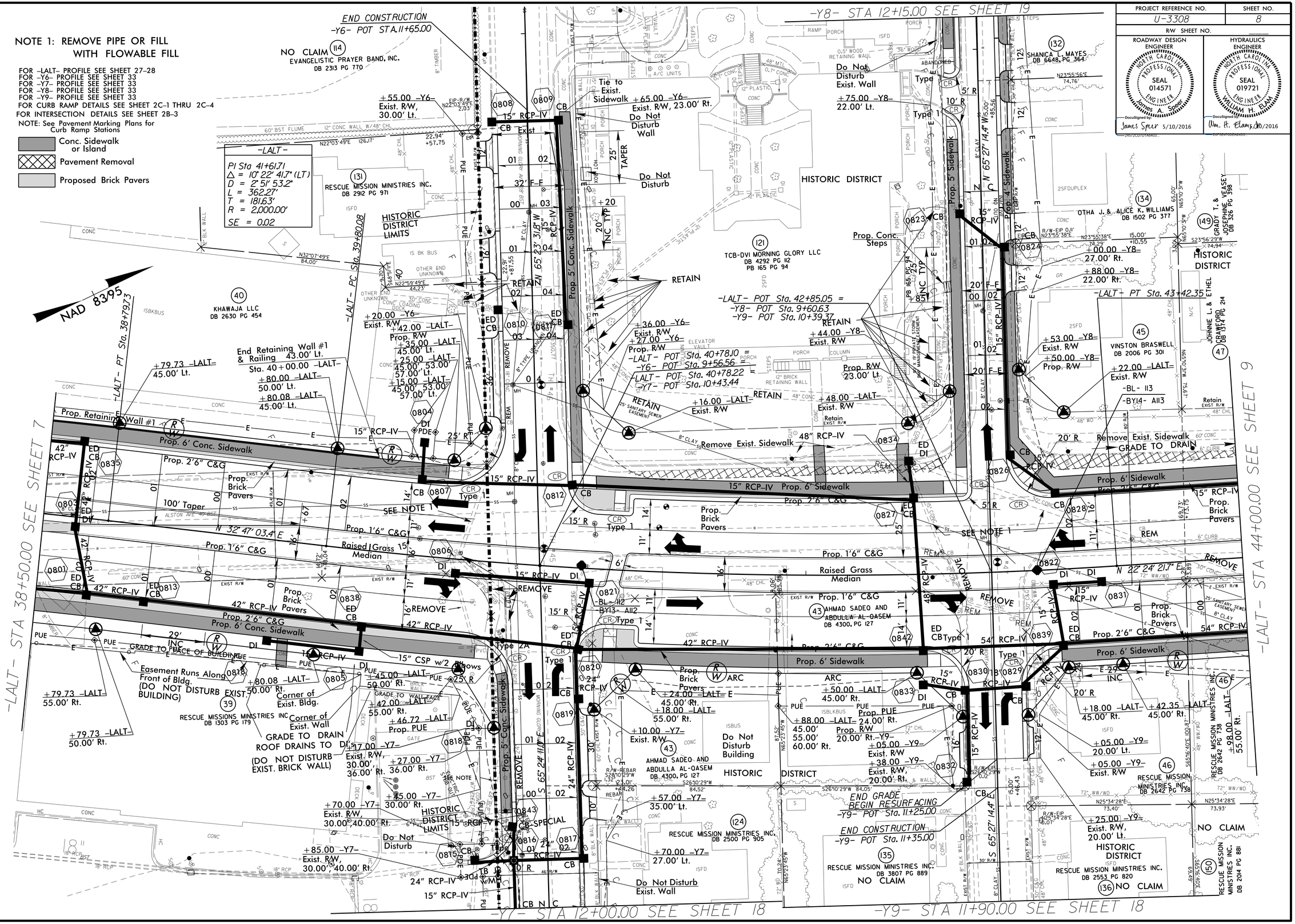

REVISIONS

8/17/99

10-MAY-2016 08:52
R:\Hydraulics\Mapping\U3308_rdy_ps08.dgn

PROJECT REFERENCE NO.	SHEET NO.
U-3308	9
R/W SHEET NO.	

ROADWAY DESIGN ENGINEER
NORTH CAROLINA PROFESSIONAL SEAL 014571 ENGINEER James A. Speer
DocuSigned by: James Speer 11/24/2015

HYDRAULICS ENGINEER
NORTH CAROLINA PROFESSIONAL SEAL 019721 ENGINEER WILLIAM H. ELAM
DocuSigned by: Wm. H. Elam, Jr. 11/23/2015

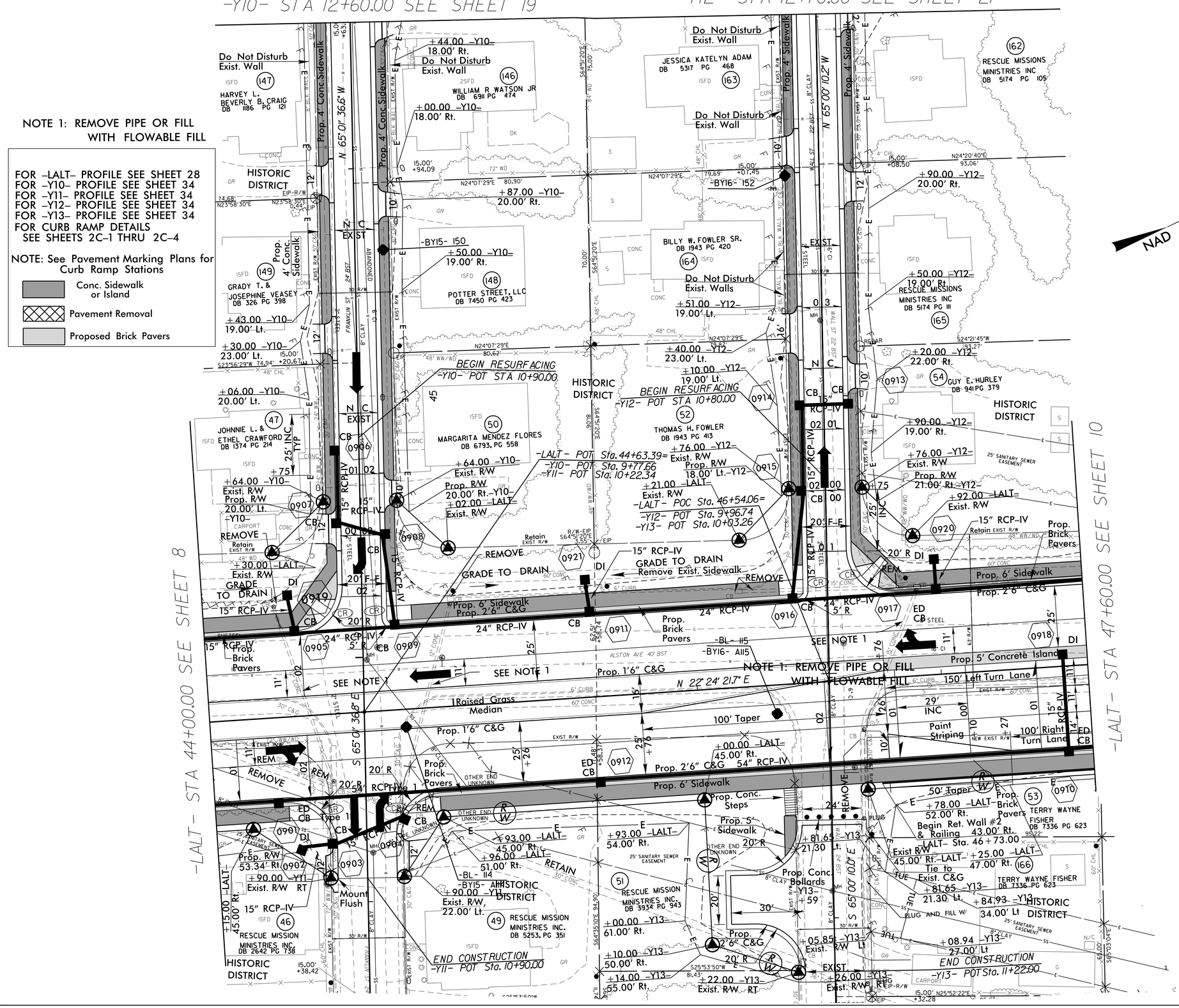

Revisions

8/17/99

23-NOV-2015 10:45
R:\Roadway\Proj\U3308_rdy_ps01.dgn
$$USERNAME$$

PROJECT REFERENCE NO.	SHEET NO.
U-3308	10
R/W SHEET NO.	

ROADWAY DESIGN ENGINEER NORTH CAROLINA PROFESSIONAL SEAL 014571 ENGINEER James Speer — DocuSigned James Speer 11/24/2015

HYDRAULICS ENGINEER NORTH CAROLINA PROFESSIONAL SEAL 019721 ENGINEER WILLIAM H. ELAM — DocuSigned Wm. H. Elam, Jr. 11/23/2015

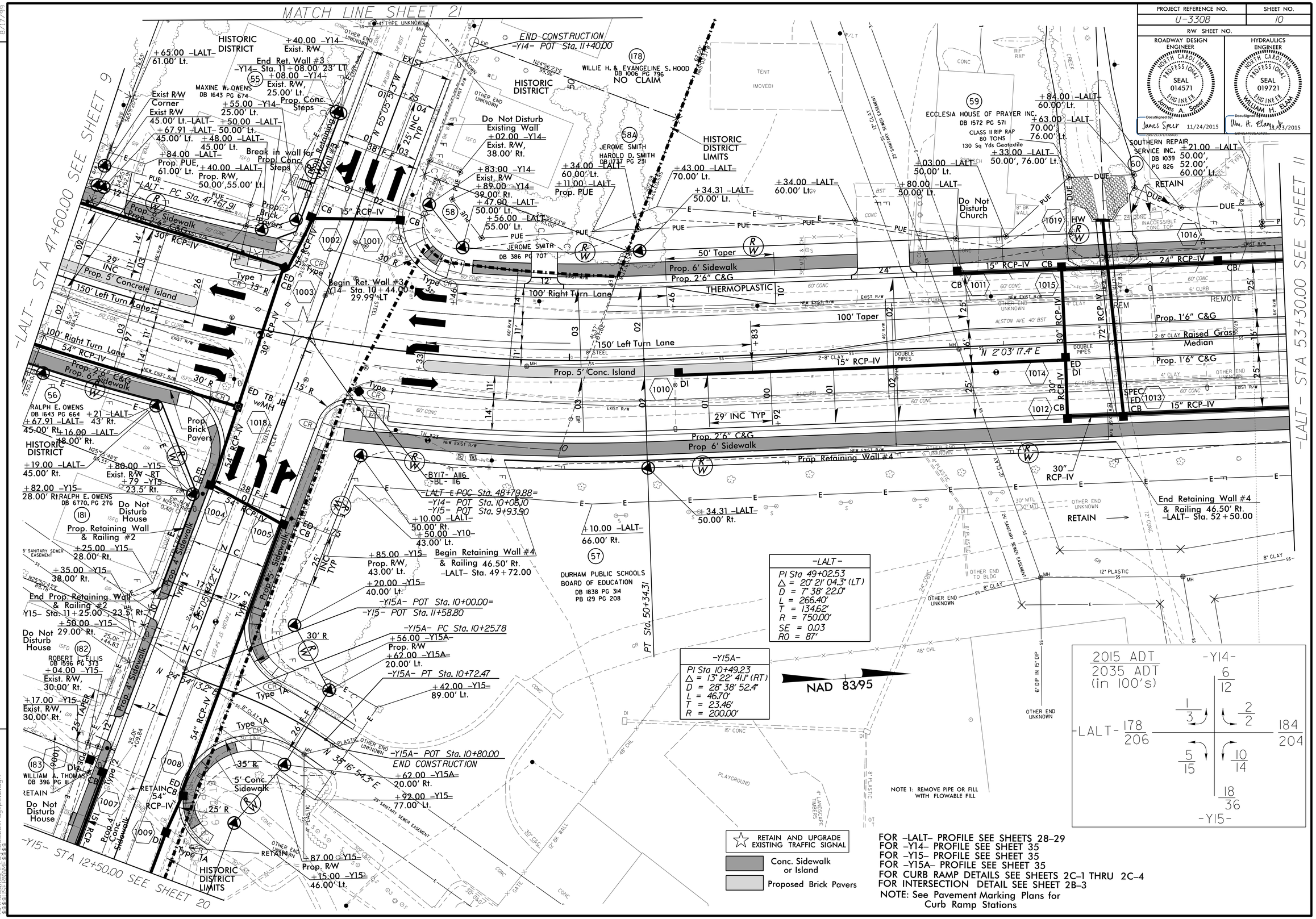

FOR –LALT– PROFILE SEE SHEETS 28–29
FOR –Y14– PROFILE SEE SHEET 35
FOR –Y15– PROFILE SEE SHEET 35
FOR –Y15A– PROFILE SEE SHEET 35
FOR CURB RAMP DETAILS SEE SHEETS 2C–1 THRU 2C–4
FOR INTERSECTION DETAIL SEE SHEET 2B–3
NOTE: See Pavement Marking Plans for Curb Ramp Stations

REVISIONS

8/17/99

23-NOV-2015 10:45
U:\Projects\U3308_rdy_psl0.dgn

PROJECT REFERENCE NO.	SHEET NO.
U-3308	11
R/W SHEET NO.	

ROADWAY DESIGN ENGINEER
NORTH CAROLINA PROFESSIONAL SEAL 014571 ENGINEER James A. Speer
DocuSigned by: James Speer 5/26/2016

HYDRAULICS ENGINEER
NORTH CAROLINA PROFESSIONAL SEAL 019721 ENGINEER WILLIAM H. ELAMS
DocuSigned by: Wm. H. Elams 5/26/2016

NOTE 1: REMOVE PIPE OR FILL WITH FLOWABLE FILL

FOR –LALT– PROFILE SEE SHEET 29
FOR –Y16– PROFILE SEE SHEET 36
FOR –Y17– PROFILE SEE SHEET 36
FOR –Y18– PROFILE SEE SHEET 36
FOR CURB RAMP DETAILS SEE SHEETS 2C–1 THRU 2C–4
FOR INTERSECTION DETAILS SEE SHEET 2B–4
NOTE: See Pavement Marking Plans for Curb Ramp Stations

Conc. Sidewalk or Island

RETAIN AND UPGRADE EXISTING TRAFFIC SIGNAL

2015 ADT / 2035 ADT (in 100's)	-Y18-	
	52 / 102	
-LALT- 188 / 210	15 / 22	6 / 18
	32 / 26	3 / 4
	-Y18- 66 / 92	

-Y18-	
PI Sta 11+27.16	PI Sta 14+09.52
Δ = 4° 03' 09.6" (RT)	Δ = 7° 10' 05.7" (LT)
D = 6° 21' 58.3"	D = 1° 25' 56.6"
L = 63.66'	L = 500.44'
T = 31.84'	T = 250.55'
R = 900.00'	R = 4,000.00'
SE = SEE PLANS	SE = NC
RO = SEE PLANS	

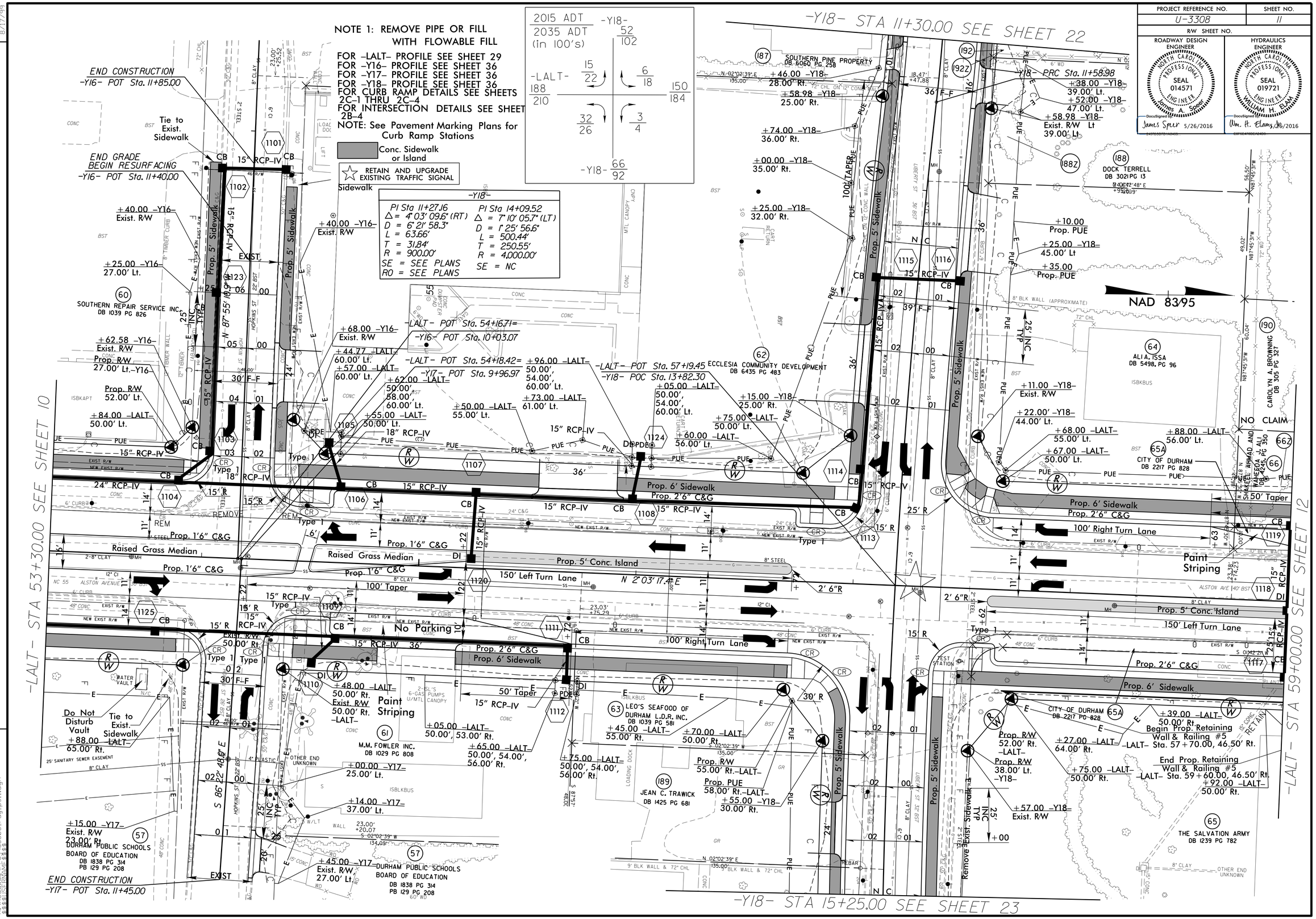

PROJECT REFERENCE NO.	SHEET NO.
U-3308	12
R/W SHEET NO.	

ROADWAY DESIGN ENGINEER — NORTH CAROLINA PROFESSIONAL SEAL 014571 — James A. Speer — DocuSigned by: James Speer 5/26/2016

HYDRAULICS ENGINEER — NORTH CAROLINA PROFESSIONAL SEAL 019721 — WILLIAM H. ELAMS — DocuSigned by: Wm. H. Elams 5/26/2016

NOTE 1: REMOVE PIPE OR FILL WITH FLOWABLE FILL

FOR –LALT– PROFILE SEE SHEETS 29–30
FOR –Y20– PROFILE SEE SHEET 37
FOR –Y21– PROFILE SEE SHEET 37
FOR –Y22– PROFILE SEE SHEET 37
FOR CURB RAMP DETAILS SEE SHEETS 2C–1 THRU 2C–4
FOR INTERSECTION DETAILS SEE SHEET 2B–5
NOTE: See Pavement Marking Plans for Curb Ramp Stations

Conc. Sidewalk or Island

Proposed Brick Pavers

RETAIN AND UPGRADE EXISTING TRAFFIC SIGNAL

–LALT–
PI Sta 64+89.21
Δ = 2° 05' 26.9" (LT)
D = 0° 22' 55.1"
L = 547.37'
T = 273.72'
R = 15,000.00'
SE = NC

NAD 83/95

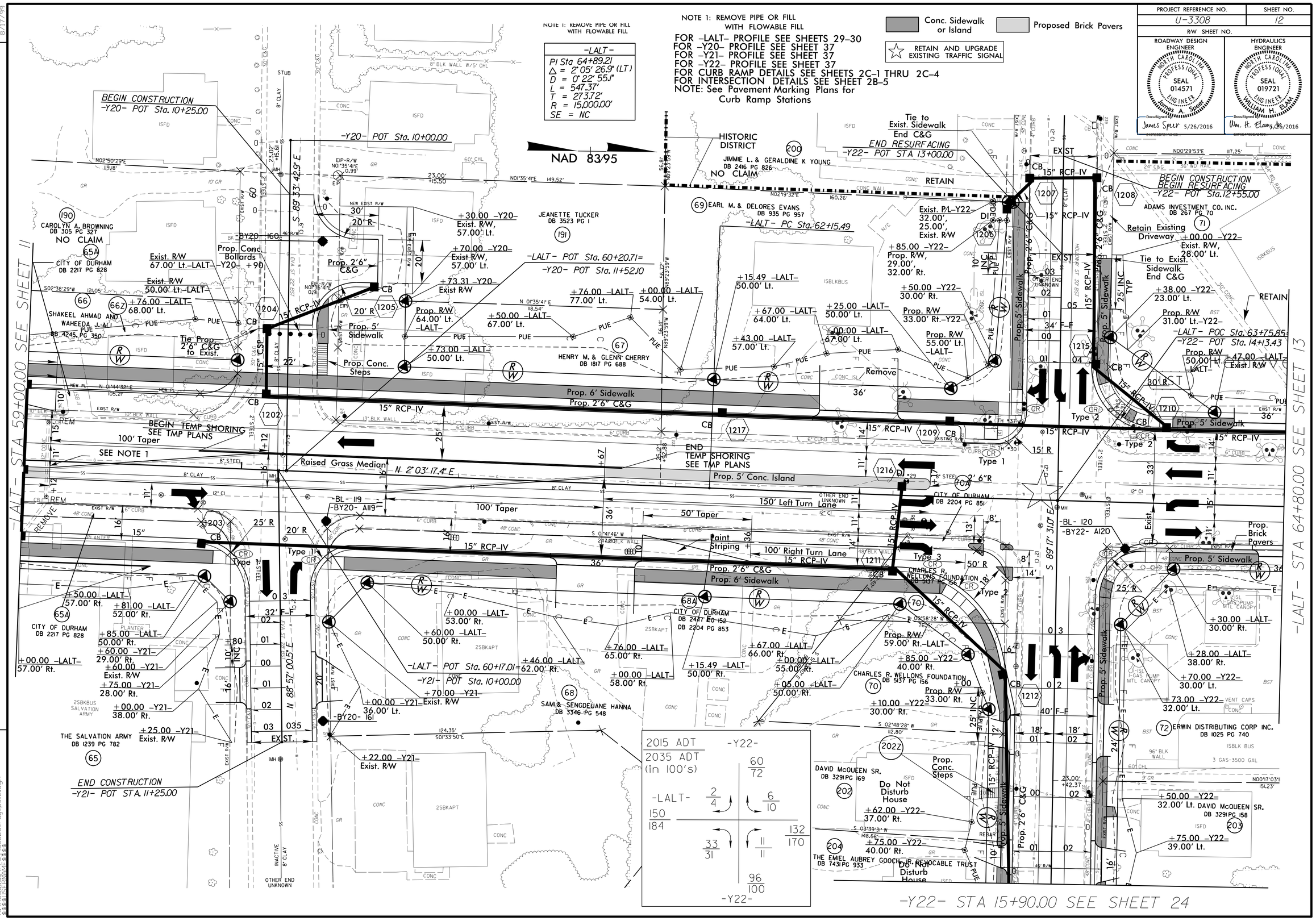

Revisions

8/17/99

23-MAY-2016 15:42
R:\Roadway\Proj\u3308_rdy_ps12.dgn

PROJECT REFERENCE NO.	SHEET NO.
U-3308	13
R/W SHEET NO.	

ROADWAY DESIGN ENGINEER
NORTH CAROLINA PROFESSIONAL SEAL 014571 ENGINEER James A. Speer
DocuSigned by: James Speer 5/26/2016

HYDRAULICS ENGINEER
NORTH CAROLINA PROFESSIONAL SEAL 019721 ENGINEER WILLIAM H. ELAM
DocuSigned by: Wm. H. Elams 5/26/2016

REVISIONS

8/17/99

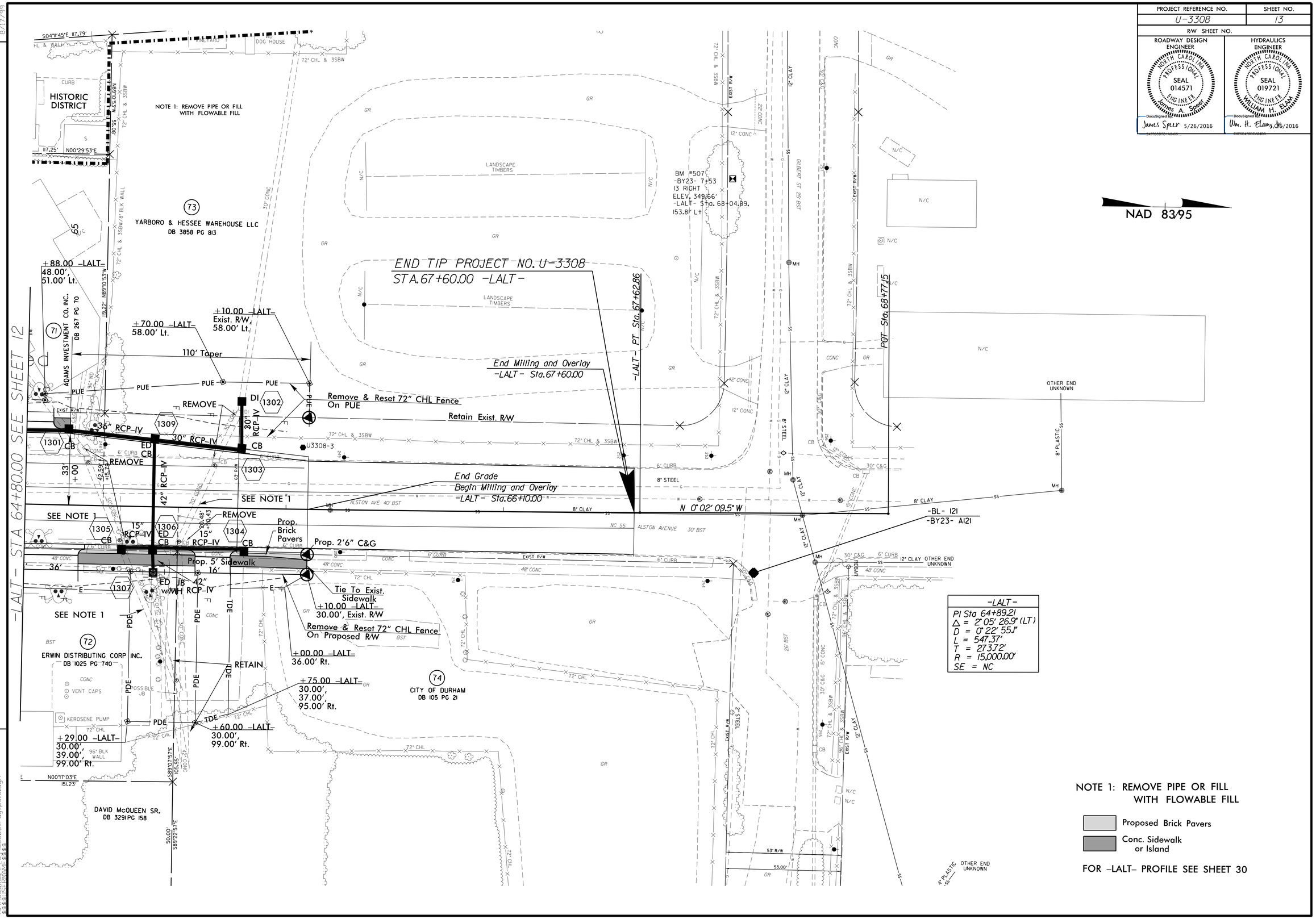

NOTE 1: REMOVE PIPE OR FILL WITH FLOWABLE FILL

Proposed Brick Pavers

Conc. Sidewalk or Island

FOR -LALT- PROFILE SEE SHEET 30

23-MAY-2016 15:42
R:\Roadway\Proj\U3308_rdy_ps13.dgn
$$$$USERNAME$$$$

PROJECT REFERENCE NO.	SHEET NO.
U-3308	14
R/W SHEET NO.	

ROADWAY DESIGN ENGINEER
NORTH CAROLINA PROFESSIONAL SEAL 014571 ENGINEER James A. Speer
DocuSigned by: James Speer 11/24/2015
24572C07D7A8403...

HYDRAULICS ENGINEER
NORTH CAROLINA PROFESSIONAL SEAL 019721 ENGINEER WILLIAM H. ELAM
DocuSigned by: Wm. H. Elam, Jr. 11/23/2015
E6FEE470DEA40D...

FOR -NSN- SEE TRACK PLANS
FOR -NSS- SEE TRACK PLANS

NOTE 1: REMOVE PIPE OR FILL WITH FLOWABLE FILL

-NSS- STA 14+60.00 SEE SHEET 15

-Y- STA 10+25.00 SEE SHEET 15

POT Sta. 10+00.00

10+00

-NSN-

-NSS-

Future TTA Tracks

6" DIP
160.0' BST
RR-RH
RR-CFLS
18" CONC
RR-XG
ELECTRIC METER
SWITCH
OTHER END UNKNOWN
SIGNAL POLE
24" DIP
12" CONC
8" CLAY
2" STEEL
EXISTING R/W
MH
CB
DI
GRANT ST 315' BST
COLFAX ST 212' BST
8" DIP PASSES THROUGH MANHOLE
50' R/W
3.84' EIP-R/W
9.38' EIP-R/W N64°40'34"W
N64°40'34"W 102.64'
S63°05'52"E 115.55'
N23°36'21"E 123.29'
N66°47'26"E 37.36'
22.80' S66°53'55"E
87.42' S66°53'55"E
87.37' N66°51'54"W
S66°53'55"E 0.19' R/W TO EIP
S66°51'54"E 0.25' R/W TO EIP
S27°16'47"W 229.35'
NAD 83/93

JOHN AVERY BOYS & GIRLS CLUB
DB 2170 PG 521
PB 59 PG 12
NO CLAIM
85

GWENDOLYN LOUDERMILK
DB 1805 PG 401
86
NO CLAIM

HASKELL PROPERTIES INC
DB 2237 PG 532
87
NO CLAIM

DUANE WILLIAMS AND WIFE JACQUELINE WILLIAMS
DB 4348 PG 547
88
NO CLAIM

MERCY RUGUARU
DB 3172 PG 359
89
NO CLAIM

RONALD E. & LILLIAS COLEMAN
DB 1869 PG 573
90
NO CLAIM

ISFD
GRAVEL
2SBKBUS

REVISIONS

8/17/99

23-NOV-2015 10:45
R:\Roadway\Proj\U3308_rdy_ps14.dgn
$$$$USERNAME$$$$

PROJECT REFERENCE NO.	SHEET NO.
U-3308	15
R/W SHEET NO.	

ROADWAY DESIGN ENGINEER
NORTH CAROLINA PROFESSIONAL SEAL 014571 ENGINEER James A. Speer
DocuSigned by: James Speer 11/24/2015

HYDRAULICS ENGINEER
NORTH CAROLINA PROFESSIONAL SEAL 019721 ENGINEER WILLIAM H. ELAM
DocuSigned by: Wm. H. Elam, Jr. 11/23/2015

REVISIONS

8/17/99

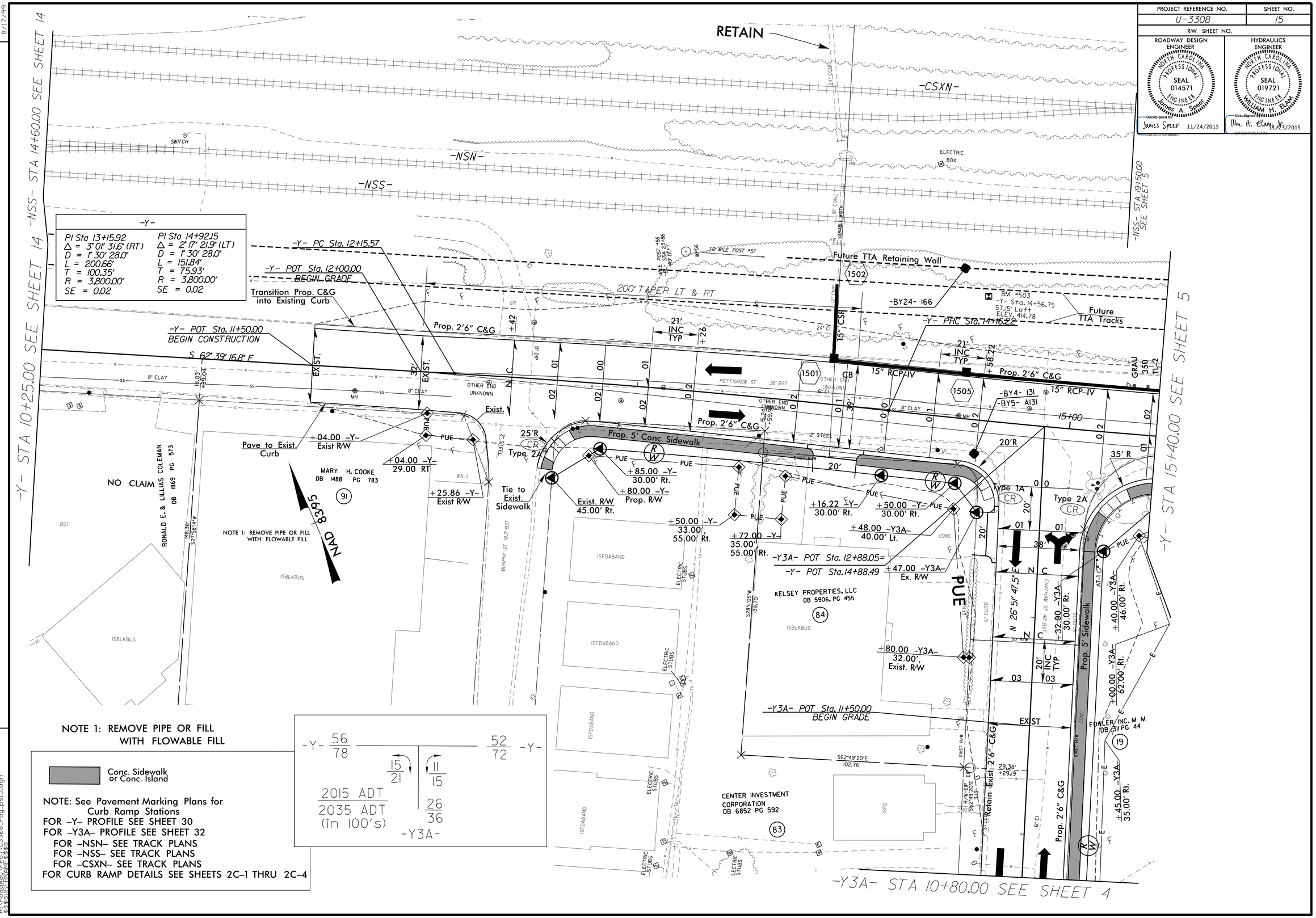

23-NOV-2015 10:45
R:\Roadway\Proj\U-3308_rdy_ps15.dgn
$$$$USERNAME$$$$

PROJECT REFERENCE NO.	SHEET NO.
U-3308	16
R/W SHEET NO.	

ROADWAY DESIGN ENGINEER
NORTH CAROLINA PROFESSIONAL SEAL 014571 ENGINEER James A. Speer
DocuSigned by: James Speer 11/24/2015
24372E07D7A8403...

HYDRAULICS ENGINEER
NORTH CAROLINA PROFESSIONAL SEAL 019721 ENGINEER WILLIAM H. ELAM
DocuSigned by: Wm. H. Elam, Jr. 11/23/2015
E4F6E4209DE4405...

FOR -Y- PROFILE SEE SHEETS 30 & 31
FOR -CSXN- SEE TRACK PLANS
FOR -NSN- SEE TRACK PLANS
FOR -NSS- SEE TRACK PLANS

NOTE 1: REMOVE PIPE OR FILL WITH FLOWABLE FILL

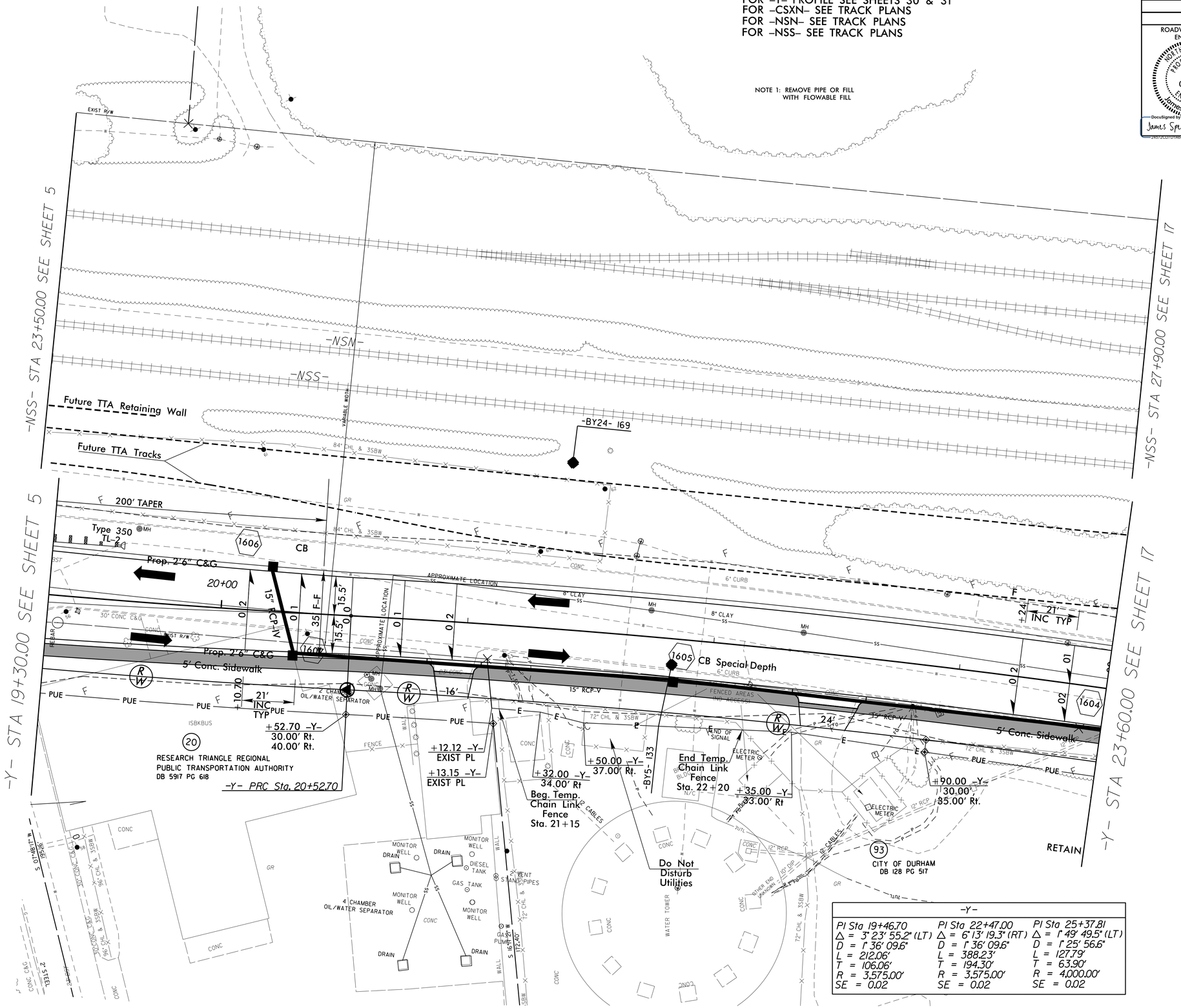

-Y-		
PI Sta 19+46.70	PI Sta 22+47.00	PI Sta 25+37.81
Δ = 3° 23' 55.2" (LT)	Δ = 6° 13' 19.3" (RT)	Δ = 1° 49' 49.5" (LT)
D = 1° 36' 09.6"	D = 1° 36' 09.6"	D = 1° 25' 56.6"
L = 212.06'	L = 388.23'	L = 127.79'
T = 106.06'	T = 194.30'	T = 63.90'
R = 3,575.00'	R = 3,575.00'	R = 4,000.00'
SE = 0.02	SE = 0.02	SE = 0.02

8/17/99

23-NOV-2015 10:45
rdy\u3308_rdy_psl6.dgn

PROJECT REFERENCE NO.	SHEET NO.
U-3308	17
R/W SHEET NO.	

ROADWAY DESIGN ENGINEER
NORTH CAROLINA PROFESSIONAL SEAL 014571 ENGINEER James A. Speer
DocuSigned by: James Speer 11/24/2015

HYDRAULICS ENGINEER
NORTH CAROLINA PROFESSIONAL SEAL 019721 ENGINEER WILLIAM H. ELAM
DocuSigned by: Wm. H. Elam 11/23/2015

FOR –NSS– SEE TRACK PLANS
FOR –NSN– SEE TRACK PLANS
FOR –Y– PROFILE SEE SHEET 31

NOTE 1: REMOVE PIPE OR FILL WITH FLOWABLE FILL

NAD 83/95

-Y- STA 23+60.00 SEE SHEET 16

-NSS- STA 27+90.00 SEE SHEET 16

EXIST R/W
FENCE
PIPES INACCESSIBLE
DI 24" CMP
18" CMP
OTHER END UNKNOWN
24" CONC
-NSN-
-NSS-
END GRADE
-Y- POT Sta. 24+50.00
-Y- PC Sta. 24+73.91
Transition Prop. C&G into Existing Curb
END CONSTRUCTION
-Y- POC Sta. 25+00.00
-BY24- 170
Future TTA Tracks
REMOVE
REMOVE 8" CLAY
SPECIAL CB
RETAIN
S 59°05' 36.5" E
25+00
15" RCP-IV
1603
1602
12" CONC
24" CI
6" CURB
8" CLAY
-Y- PT Sta. 26+01.70
~~-Y- POT Sta. 26+63.34~~
S 60°55' 26.4" E
PETTIGREW ST 36' BST
15" CONC
16" CI
18" CONC
12" CONC
2" PLASTIC
PUE
+40.92 -Y- 30.00' Rt.
+50.00 -Y- Exist. R/W, 30.00' Rt.
+58.00 -Y- Exist. R/W, 35.0' Rt.
-Y- PT Sta. 24+40.92
93 CITY OF DURHAM DB 128 PG 517
94 SOUTHERN REPAIR SERVICE INC. DB 1093 PG 879 NO CLAIM
95 SOUTHERN REPAIR SERVICE INC. DB 1093 PG 879 NO CLAIM
96 SOUTHERN REPAIR SERVICE INC. DB 1093 PG 879 NO CLAIM
97 SOUTHERN REPAIR SERVICE DB 1093 PG 879 NO CLAIM
-BY5- 134
-BY5- 135
-BY9- A135
N25°04' 37"E 146.39'
N23°26' 51"E 164.60'
N/C
ISFD
ISFD DUPLEX
GR
GRAVEL
SOWELL ST 23.9' BST
AMBER PL 14' BST
8" CLAY
13.9'
4' STEEL
REBAR
BK STEPS
72" CHL & SSBW

REVISIONS 8/17/99

23-NOV-2015 10:45
R:\Roadway\Proj\U3308_rdy_pst17.dgn
$$$$USERNAME$$$$

PROJECT REFERENCE NO.	SHEET NO.
U-3308	18
R/W SHEET NO.	
ROADWAY DESIGN ENGINEER	HYDRAULICS ENGINEER
SEAL 014571 James A. Speer	SEAL 019721 William H. Elam
DocuSigned by: James Speer 11/24/2015	DocuSigned by: Wm. H. Elam 11/23/2015

NOTE 1: REMOVE PIPE OR FILL WITH FLOWABLE FILL

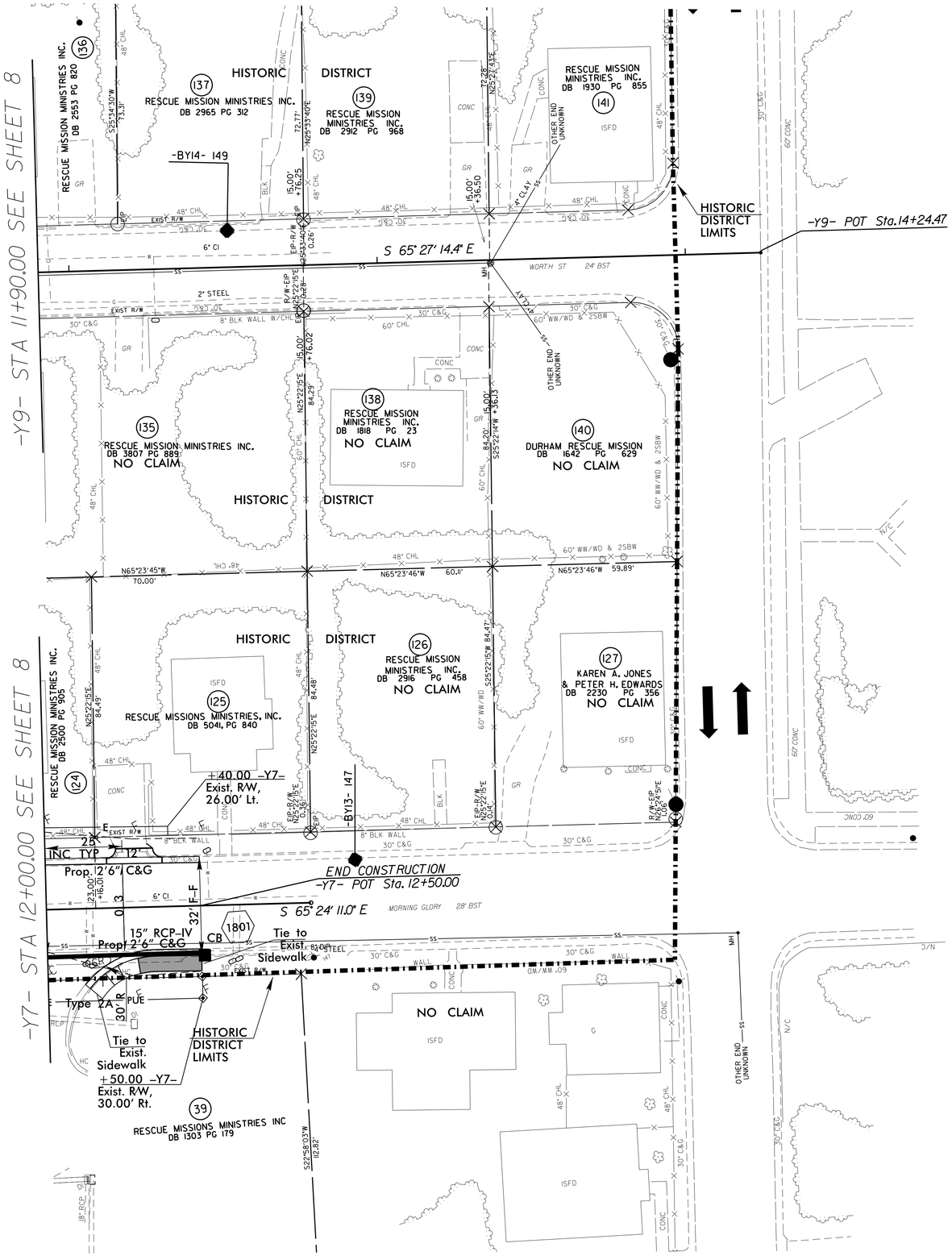

Conc. Sidewalk or Island

FOR -Y7- PROFILE SEE SHEET 33

REVISIONS

8/17/99

23-NOV-2015 10:45
R:\Roadway\Proj\U3308_rdy_pls18.dgn
$$$$USERNAME$$$$

PROJECT REFERENCE NO.	SHEET NO.
U-3308	19
R/W SHEET NO.	

ROADWAY DESIGN ENGINEER
NORTH CAROLINA PROFESSIONAL SEAL 014571 ENGINEER James A. Speer
DocuSigned by: James Speer 11/24/2015

HYDRAULICS ENGINEER
NORTH CAROLINA PROFESSIONAL SEAL 019721 ENGINEER WILLIAM H. ELAM
DocuSigned by: Wm. H. Elam, Jr. 11/23/2015

8/17/99

REVISIONS

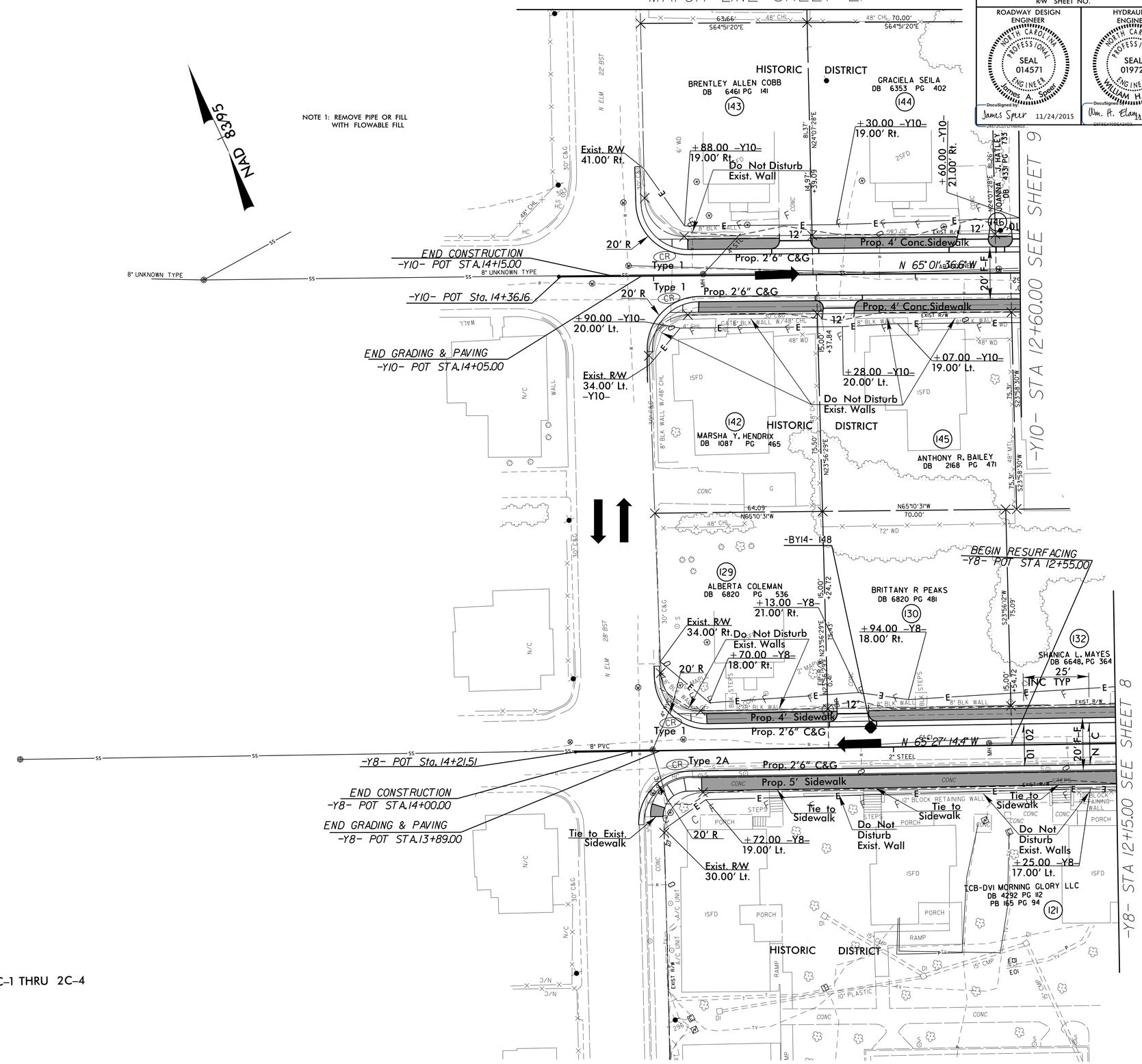

Conc. Sidewalk or Island

FOR -Y8- PROFILE SEE SHEET 33

FOR -Y10- PROFILE SEE SHEET 34

FOR RAMP CURB DETAILS SEE SHEET 2C-1 THRU 2C-4

NOTE: See Pavement Marking Plans for Curb Ramp Stations

23-NOV-2015 10:46
u3308_rdy_ps19.dgn

PROJECT REFERENCE NO.	SHEET NO.
U-3308	20
R/W SHEET NO.	

ROADWAY DESIGN ENGINEER
NORTH CAROLINA PROFESSIONAL SEAL 014571 ENGINEER James A. Speer
DocuSigned by: James Speer 11/24/2015

HYDRAULICS ENGINEER
NORTH CAROLINA PROFESSIONAL SEAL 019721 ENGINEER WILLIAM H. ELAM
DocuSigned by: Wm. H. Elam 11/23/2015

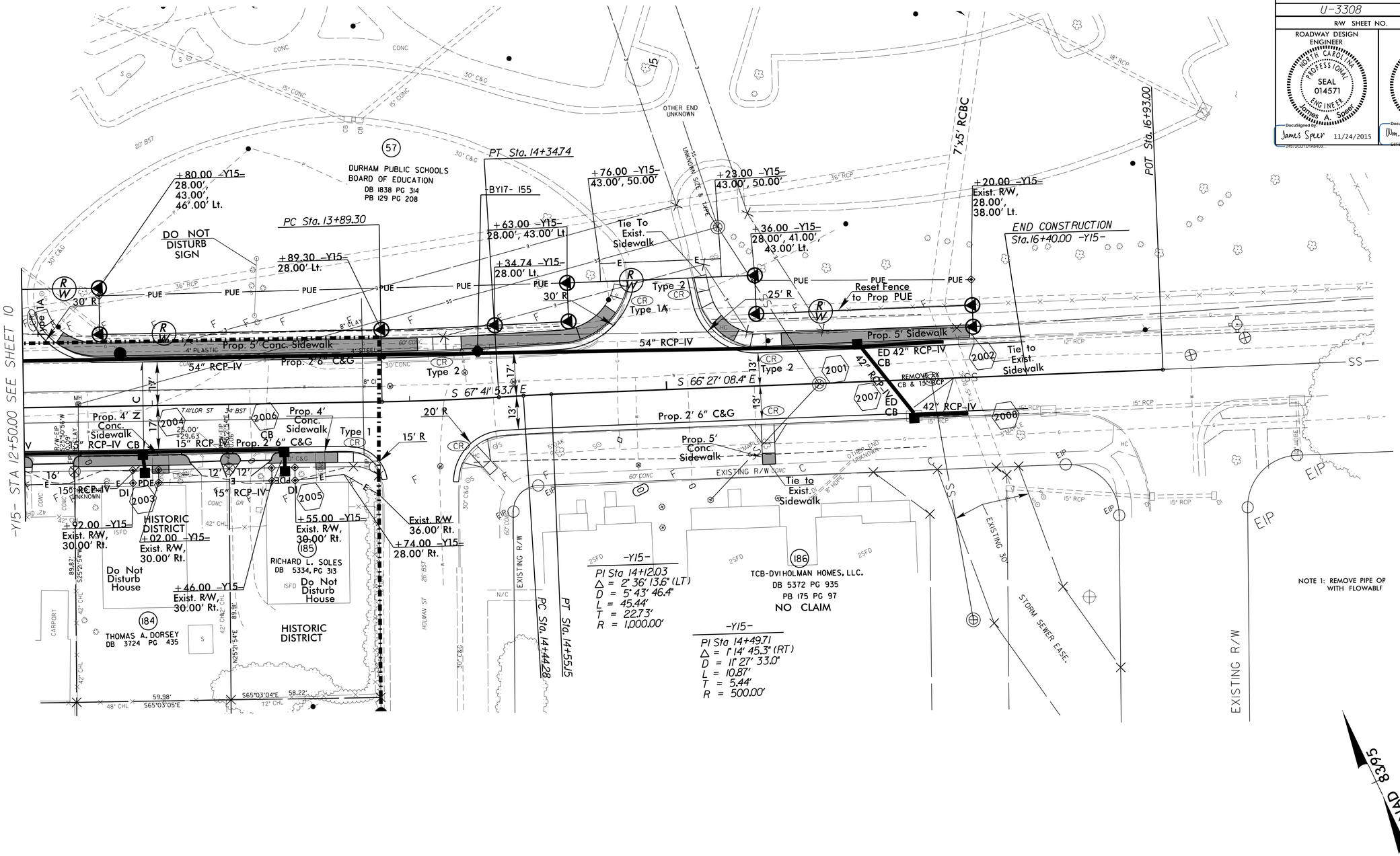

NOTE 1: REMOVE PIPE OP WITH FLOWABLF

NOTE 1: REMOVE PIPE OR FILL WITH FLOWABLE FILL

Conc. Sidewalk or Island

FOR -Y15- PROFILE SEE SHEET 35

FOR CURB RAMP DETAILS SEE SHEET 2C-1 THRU 2C-4

NOTE: See Pavement Marking Plans for Curb Ramp Stations

Revisions

8/17/99

23-NOV-2015 10:46
R:\Roadway\Proj\3308_rdy_ps20.dgn
$$$$USERNAME$$$$

PROJECT REFERENCE NO.	SHEET NO.
U-3308	21
R/W SHEET NO.	

ROADWAY DESIGN ENGINEER
NORTH CAROLINA PROFESSIONAL SEAL 014571 ENGINEER James A. Speer
DocuSigned by: James Speer 11/24/2015

HYDRAULICS ENGINEER
NORTH CAROLINA PROFESSIONAL SEAL 019721 ENGINEER WILLIAM H. ELAM
DocuSigned by: Wm. H. Elam, Jr. 11/23/2015

NOTE 1: REMOVE PIPE OR FILL WITH FLOWABLE FILL

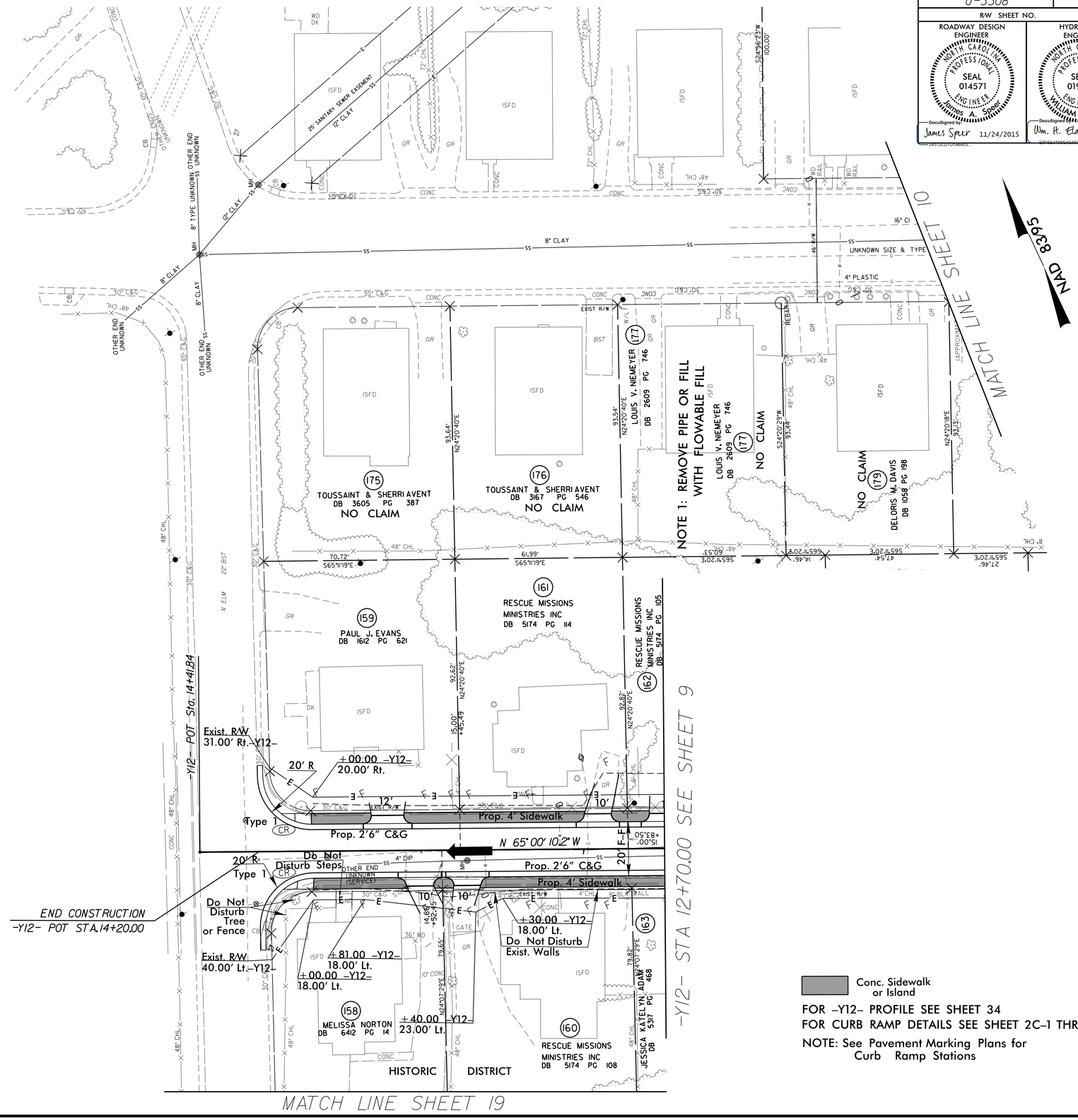

FOR -Y12- PROFILE SEE SHEET 34
FOR CURB RAMP DETAILS SEE SHEET 2C-1 THRU 2C-4
NOTE: See Pavement Marking Plans for Curb Ramp Stations

Revisions

8/17/99

23-NOV-2015 10:46
R:\Roadway\Proj\U3308_rdy_ps21.dgn
$$$$USERNAME$$$$

PROJECT REFERENCE NO.	SHEET NO.
U-3308	22
R/W SHEET NO.	

ROADWAY DESIGN ENGINEER
NORTH CAROLINA PROFESSIONAL SEAL 014571 ENGINEER James A. Speer
DocuSigned by: James Speer 11/24/2015

HYDRAULICS ENGINEER
NORTH CAROLINA PROFESSIONAL SEAL 019721 ENGINEER WILLIAM H. ELAM
DocuSigned by: Wm. H. Elam 11/23/2015

-Y18-
PI Sta 11+27.16
Δ = 4° 03' 09.6" (RT)
D = 6° 21' 58.3"
L = 63.66'
T = 31.84'
R = 900.00'
SE = SEE PLANS
RO = SEE PLANS

NOTE 1: REMOVE PIPE OR FILL WITH FLOWABLE FILL

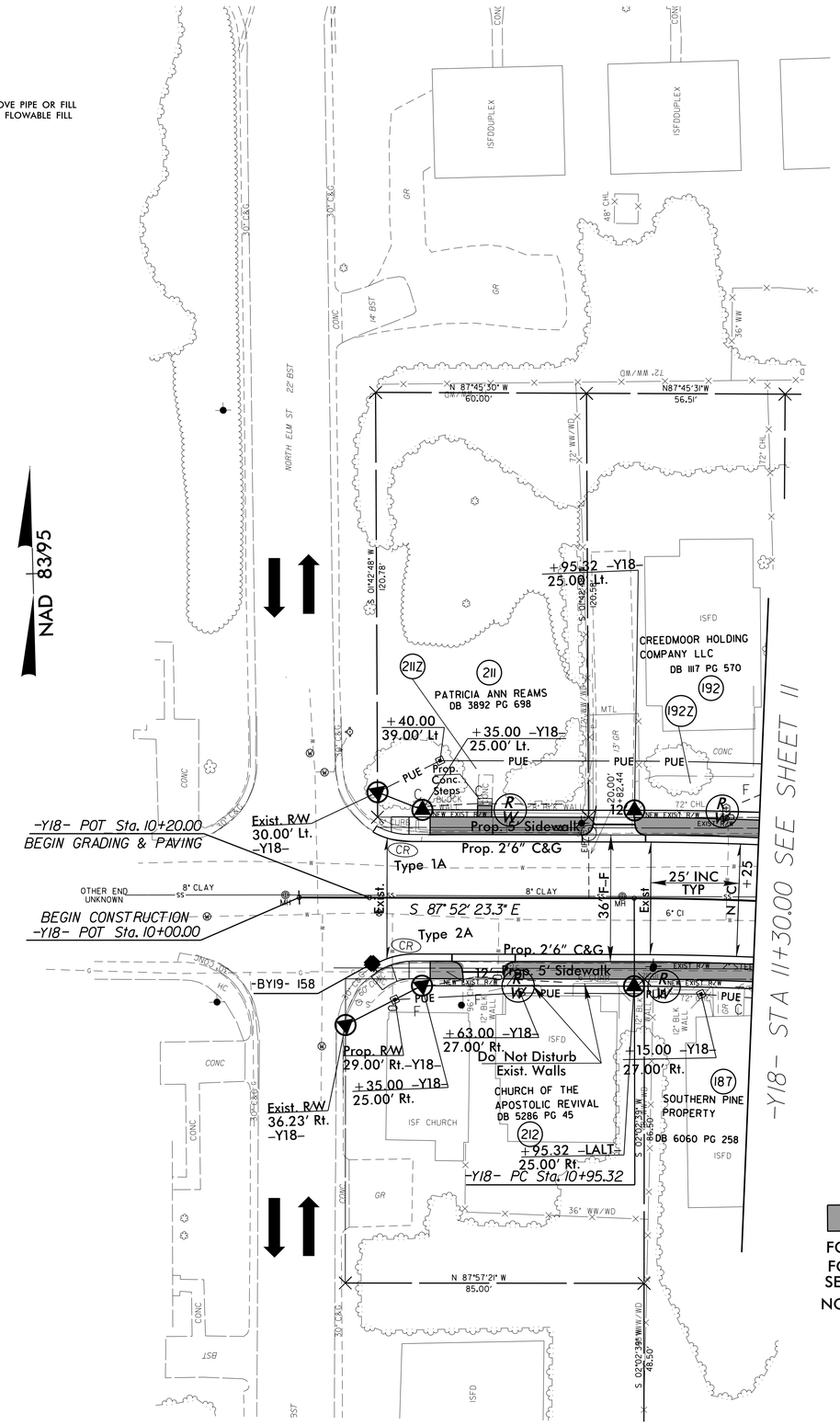

Conc. Sidewalk or Island

FOR -Y18- PROFILE SEE SHEET 36
FOR CURB RAMP DETAILS SEE SHEETS 2C-1 THRU 2C-4

NOTE: See Pavement Marking Plans for Curb Ramp Stations

REVISIONS

8/17/99

23-NOV-2015 10:46
r:\roadway\proj\u3308_rdy_ps22.dgn
$$$$USERNAME$$$$

PROJECT REFERENCE NO.	SHEET NO.
U-3308	23
R/W SHEET NO.	

ROADWAY DESIGN ENGINEER
NORTH CAROLINA PROFESSIONAL SEAL 014571 ENGINEER James A. Speer
DocuSigned by: James Speer 11/24/2015

HYDRAULICS ENGINEER
NORTH CAROLINA PROFESSIONAL SEAL 019721 ENGINEER WILLIAM H. ELAM
DocuSigned by: Wm. H. Elam, Jr. 11/23/2015

REVISIONS

8/17/99

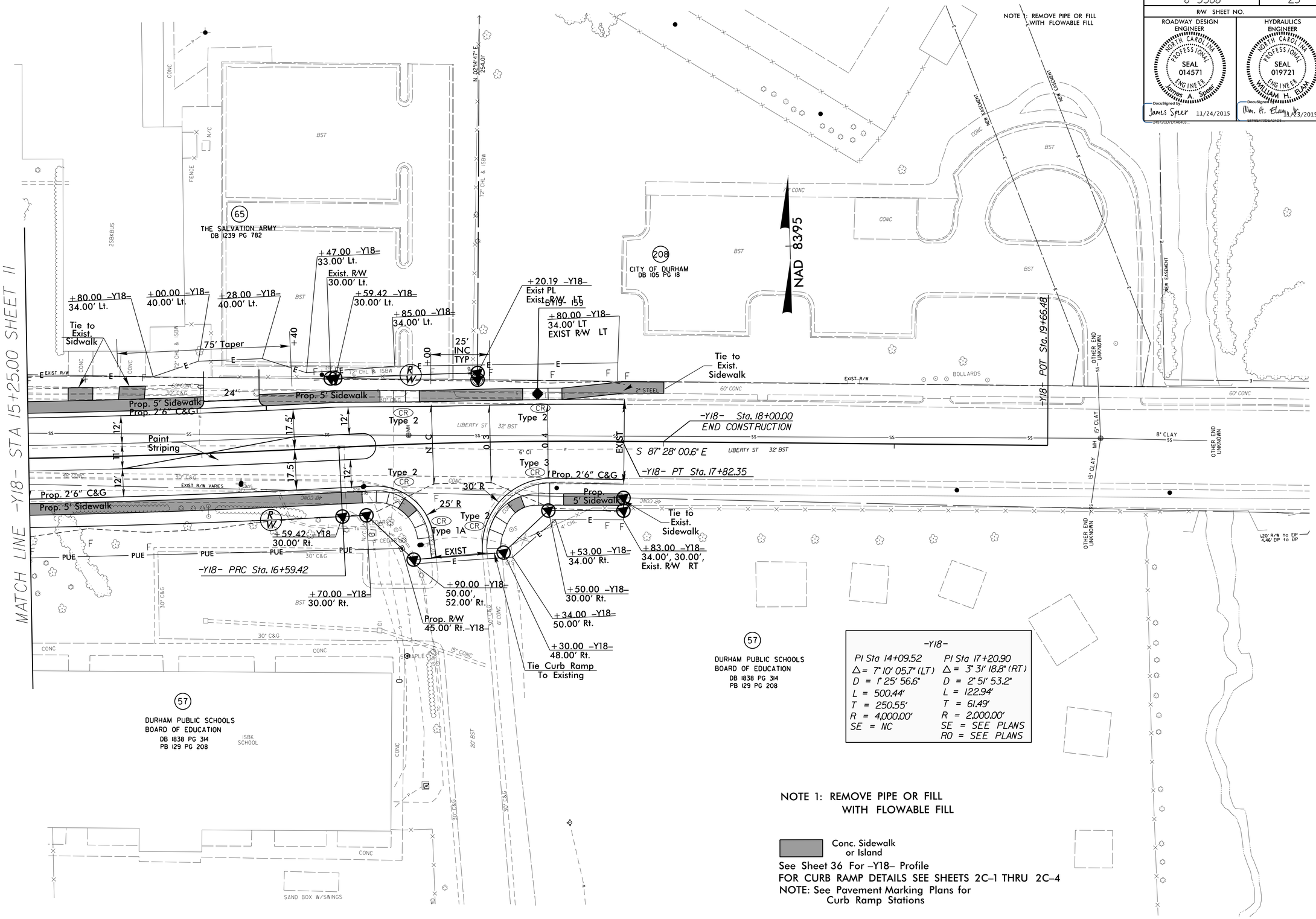

23-NOV-2015 10:46
22:\roadway\proj\U3308_rdy_ps23.dgn
$$$$USERNAME$$$$

PROJECT REFERENCE NO.	SHEET NO.
U-3308	24
R/W SHEET NO.	

ROADWAY DESIGN ENGINEER
NORTH CAROLINA PROFESSIONAL SEAL 014571 ENGINEER James A. Speer
DocuSigned by: James Speer 11/24/2015

HYDRAULICS ENGINEER
NORTH CAROLINA PROFESSIONAL SEAL 019721 ENGINEER WILLIAM H. ELAM
DocuSigned by: Wm. H. Elam 11/23/2015

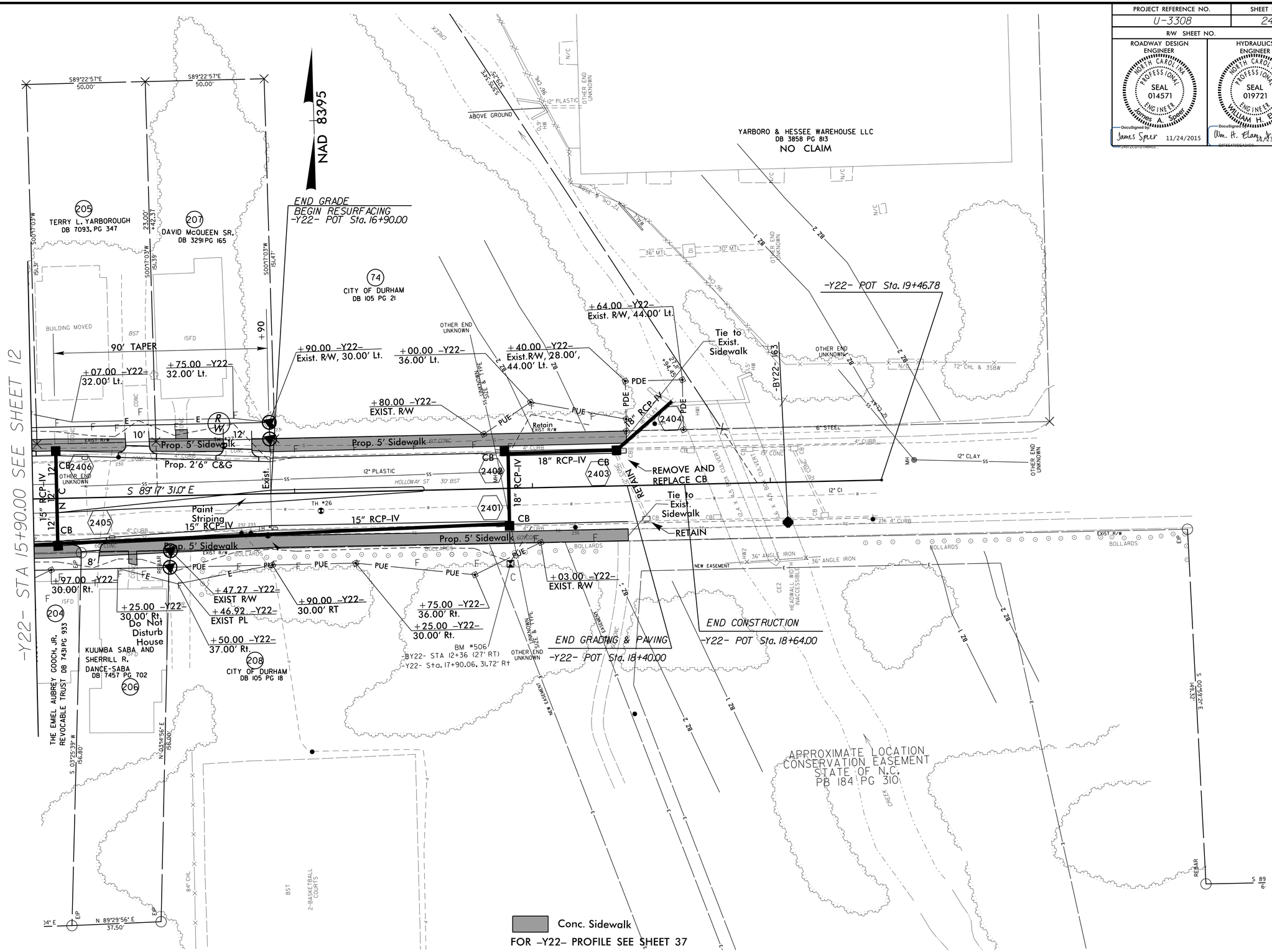

NOTE 1: REMOVE PIPE OR FILL WITH FLOWABLE FILL

REVISIONS

8/17/99

23-NOV-2015 10:46
22:\Roadway\Proj\U3308_rdy_ps24.dgn
$$$$USERNAME$$$$

PROJECT REFERENCE NO.	SHEET NO.
U-3308	25

ROADWAY DESIGN ENGINEER
NORTH CAROLINA PROFESSIONAL SEAL 014571 ENGINEER James A. Speer
DocuSigned James Speer 11/23/2015

HYDRAULICS ENGINEER
NORTH CAROLINA PROFESSIONAL SEAL 019721 ENGINEER WILLIAM H. ELAM, JR.
DocuSigned Wm. H. Elam, Jr. 11/23/2015

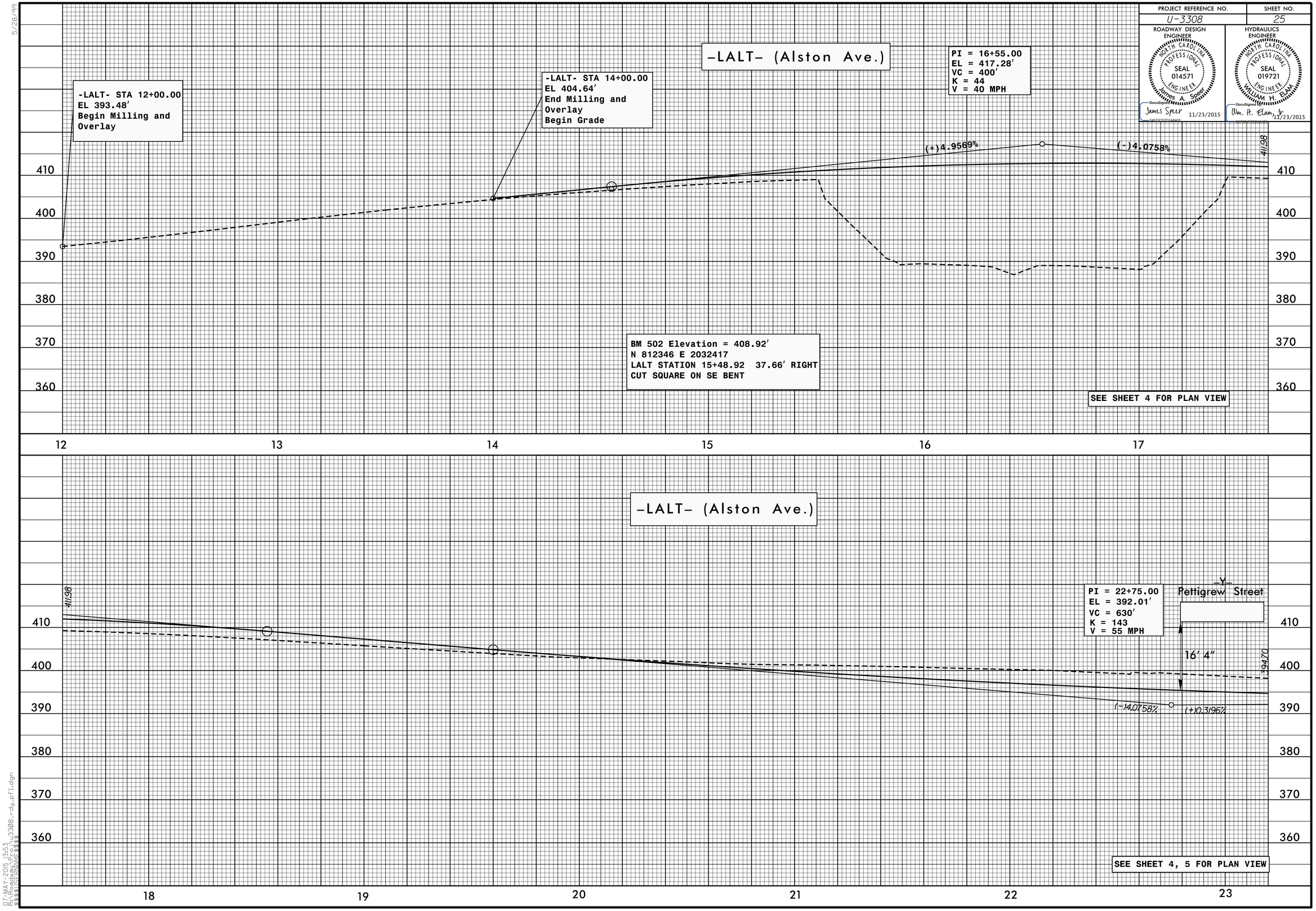

5/28/99

07-MAY-2015 13:53
R:\Roadway\Proj\u3308_rdy_pfl.dgn
$$$$USERNAME$$$$

PROJECT REFERENCE NO.	SHEET NO.
U-3308	26

ROADWAY DESIGN ENGINEER
NORTH CAROLINA PROFESSIONAL SEAL 014571 ENGINEER James A. Spear
DocuSigned James Spear 11/23/2015

HYDRAULICS ENGINEER
NORTH CAROLINA PROFESSIONAL SEAL 019721 ENGINEER WILLIAM H. ELAM
DocuSigned Wm. H. Elam 11/23/2015

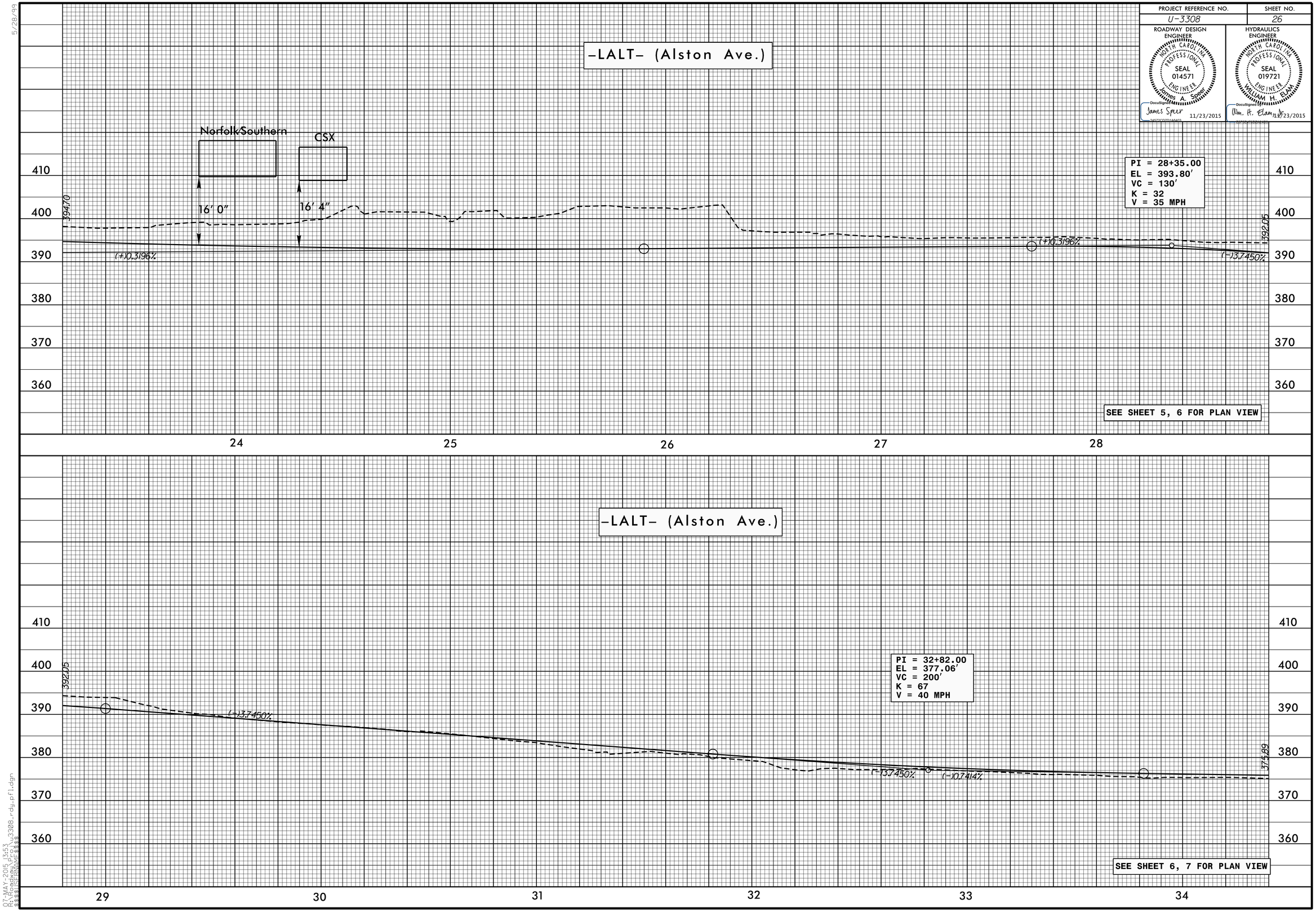

5/28/99

07-MAY-2015 13:53
R:\Roadway\Proj\u3308_rdy_pfl.dgn
$$$$USERNAME$$$$

PROJECT REFERENCE NO.	SHEET NO.
U-3308	27

ROADWAY DESIGN ENGINEER
NORTH CAROLINA PROFESSIONAL SEAL 014571 ENGINEER James A. Spear
DocuSigned by: James Spear 11/23/2015

HYDRAULICS ENGINEER
NORTH CAROLINA PROFESSIONAL SEAL 019721 ENGINEER WILLIAM H. ELAM, JR.
DocuSigned by: Wm. H. Elam, Jr. 11/23/2015

-LALT- (Alston Ave.)

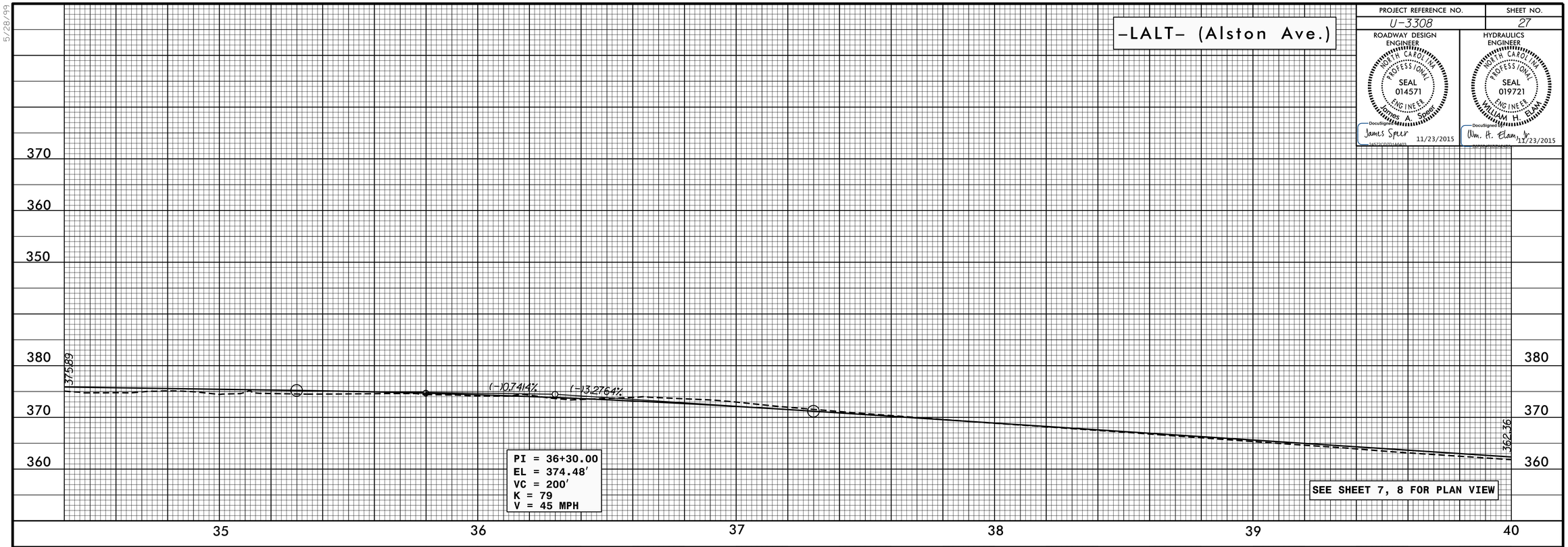

-LALT- (Alston Ave.)

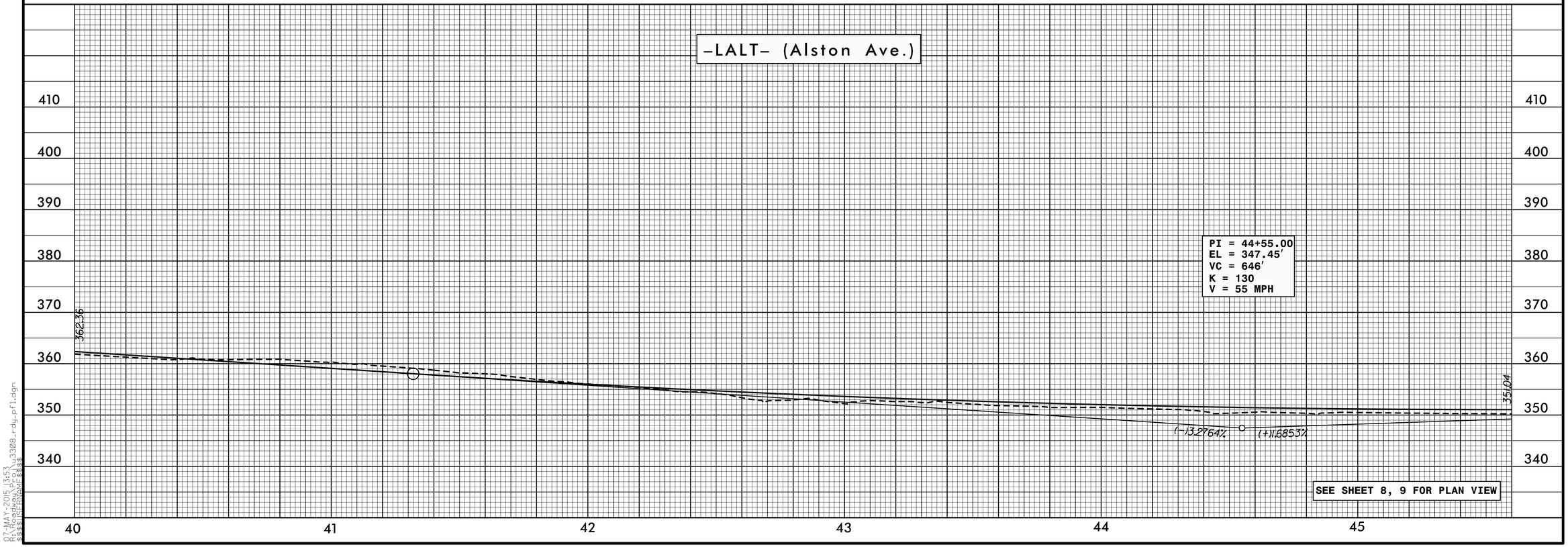

5/28/99

07-MAY-2015 13:53
R:\Roadway\Proj\u3308_rdy_pfl.dgn
$$$$USERNAME$$$$

PROJECT REFERENCE NO.	SHEET NO.
U-3308	28

ROADWAY DESIGN ENGINEER
NORTH CAROLINA PROFESSIONAL SEAL 014571 ENGINEER James A. Spear
DocuSigned: James Spear 11/23/2015

HYDRAULICS ENGINEER
NORTH CAROLINA PROFESSIONAL SEAL 019721 ENGINEER WILLIAM H. ELAM, JR.
DocuSigned: Wm. H. Elam, Jr. 11/23/2015

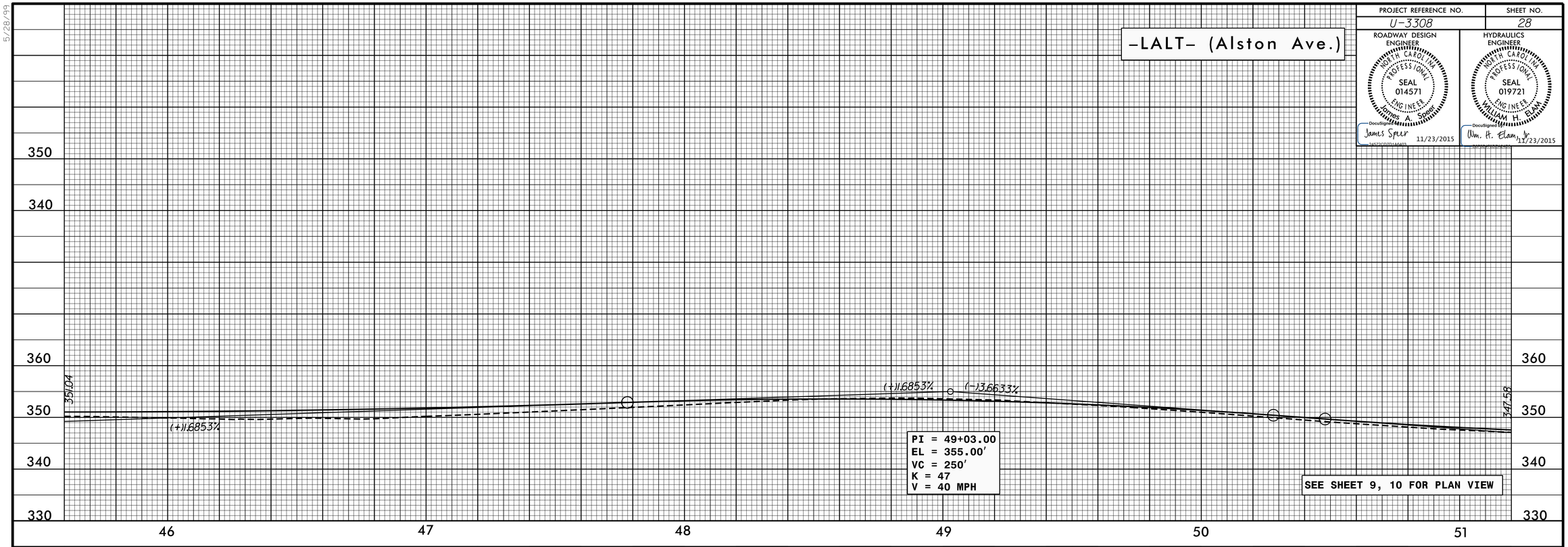

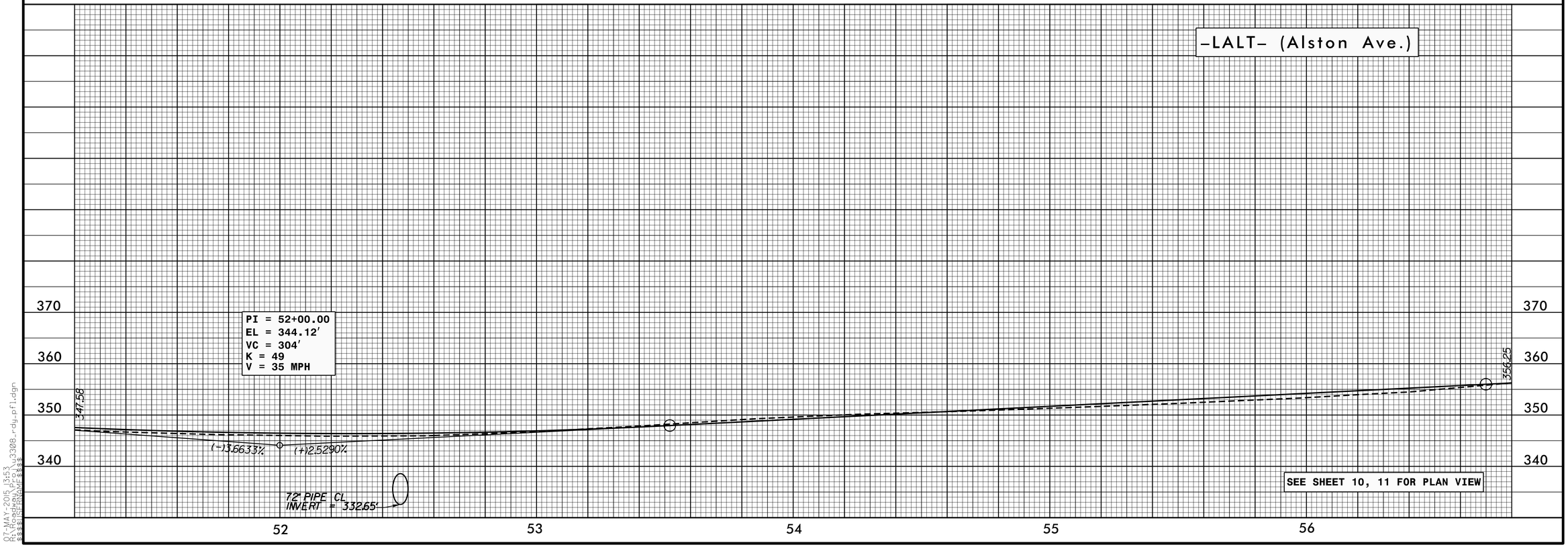

5/28/99

07-MAY-2015 13:53
R:\Roadway\Proj\u3308_rdy_pfl.dgn
$$$$USERNAME$$$$

PROJECT REFERENCE NO.	SHEET NO.
U-3308	29

ROADWAY DESIGN ENGINEER
NORTH CAROLINA PROFESSIONAL SEAL 014571 ENGINEER James A. Spear
DocuSigned: James Spear 11/23/2015

HYDRAULICS ENGINEER
NORTH CAROLINA PROFESSIONAL SEAL 019721 ENGINEER WILLIAM H. ELAM, JR.
DocuSigned: Wm. H. Elam, Jr. 11/23/2015

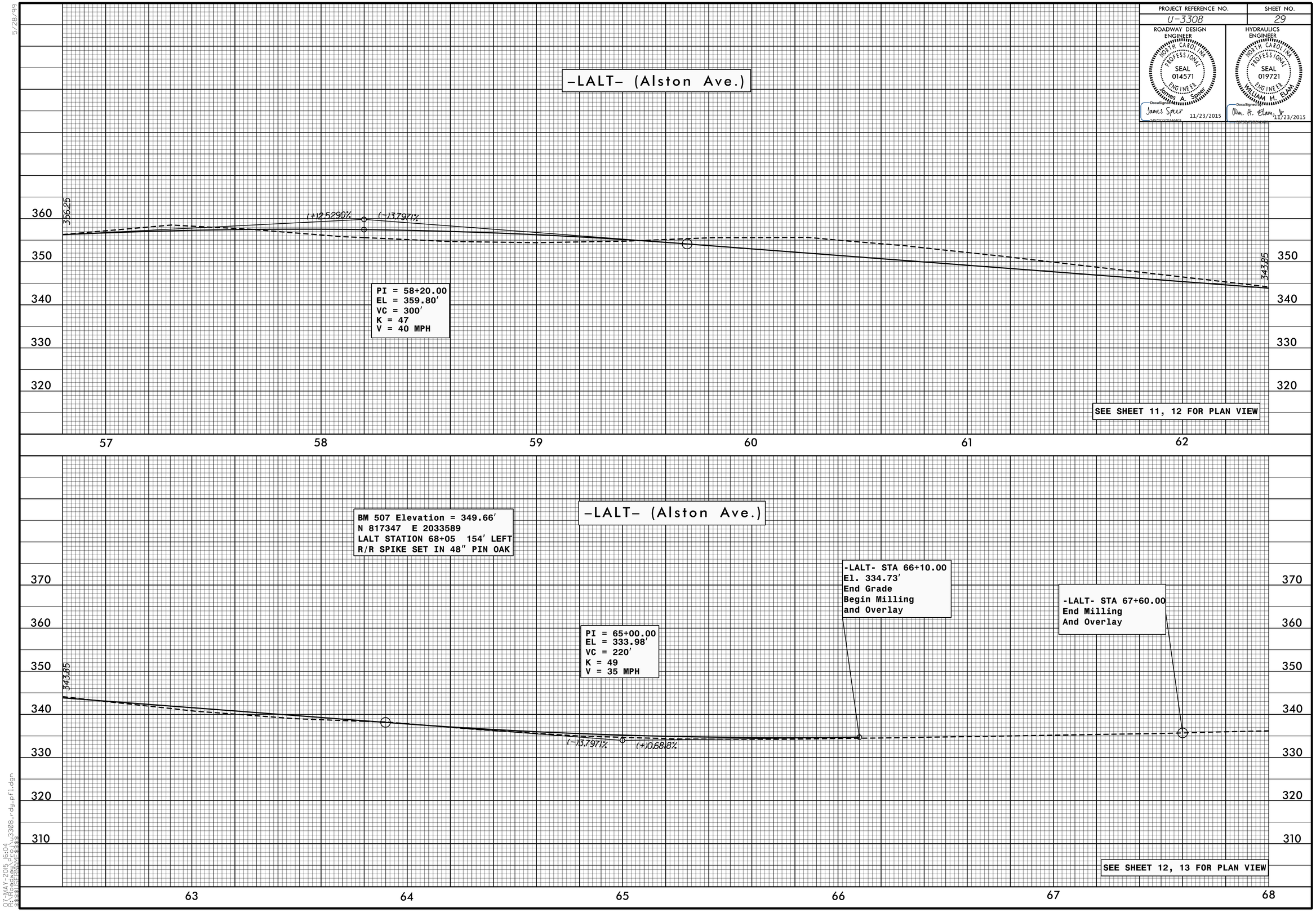

5/28/99

07-MAY-2015 16:04
R:\Roadway\Proj\u3308_rdy_pfl.dgn
$$$$USERNAME$$$$

PROJECT REFERENCE NO.	SHEET NO.
U-3308	30

ROADWAY DESIGN ENGINEER
NORTH CAROLINA PROFESSIONAL SEAL 014571 ENGINEER James A. Spear
DocuSigned: James Spear 11/23/2015

HYDRAULICS ENGINEER
NORTH CAROLINA PROFESSIONAL SEAL 019721 ENGINEER WILLIAM H. ELAM, JR.
DocuSigned: Wm. H. Elam, Jr. 11/23/2015

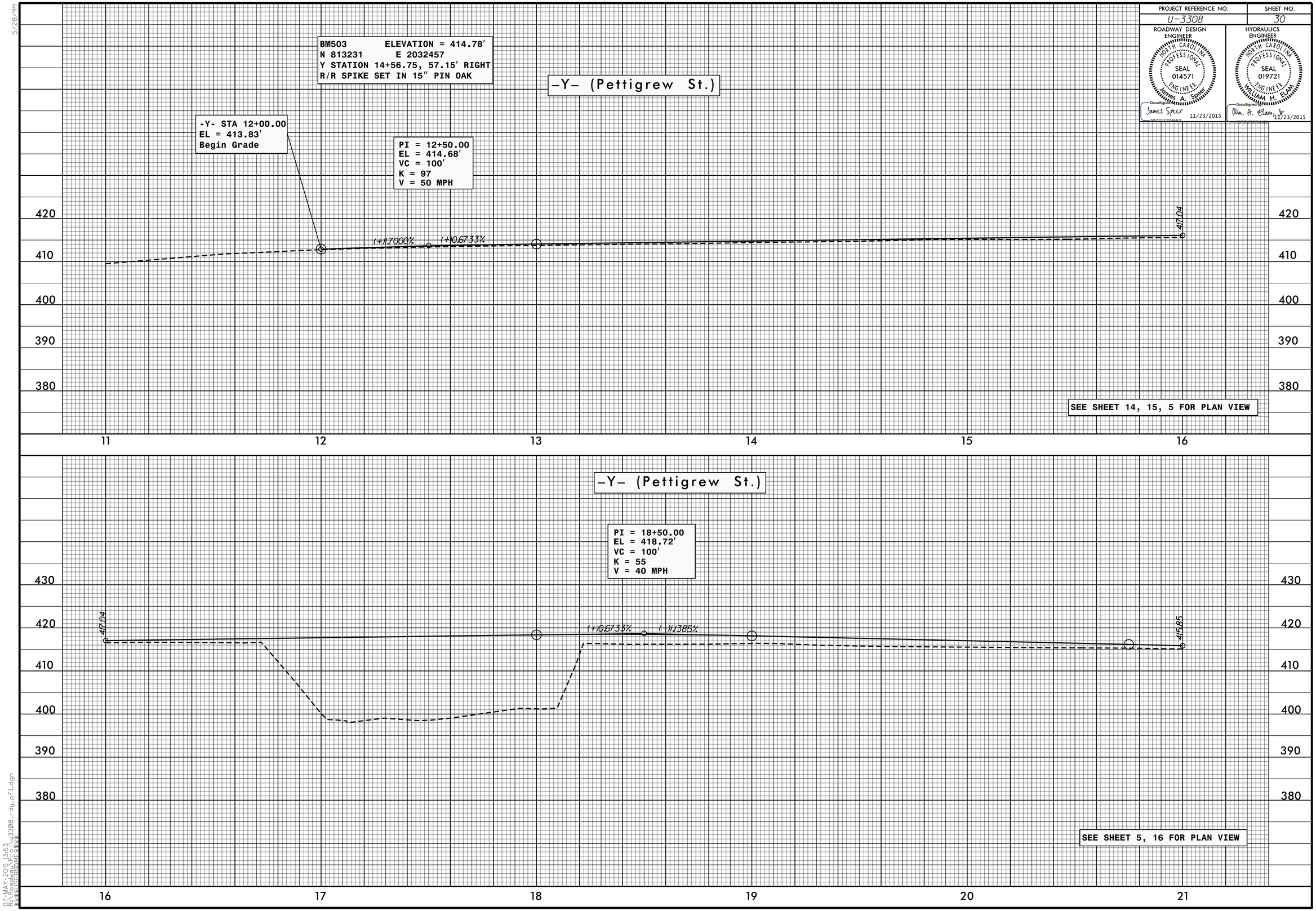

5/28/99

07-MAY-2015 13:53
R:\Roadway\Proj\u3308_rdy_pfl.dgn
$$$$USERNAME$$$$

PROJECT REFERENCE NO.	SHEET NO.
U-3308	31

ROADWAY DESIGN ENGINEER
NORTH CAROLINA PROFESSIONAL SEAL 014571 ENGINEER James A. Spear
DocuSigned James Spear 11/23/2015

HYDRAULICS ENGINEER
NORTH CAROLINA PROFESSIONAL SEAL 019721 ENGINEER WILLIAM H. ELAM, JR.
DocuSigned Wm. H. Elam, Jr. 11/23/2015

-Y- (Pettigrew St.)

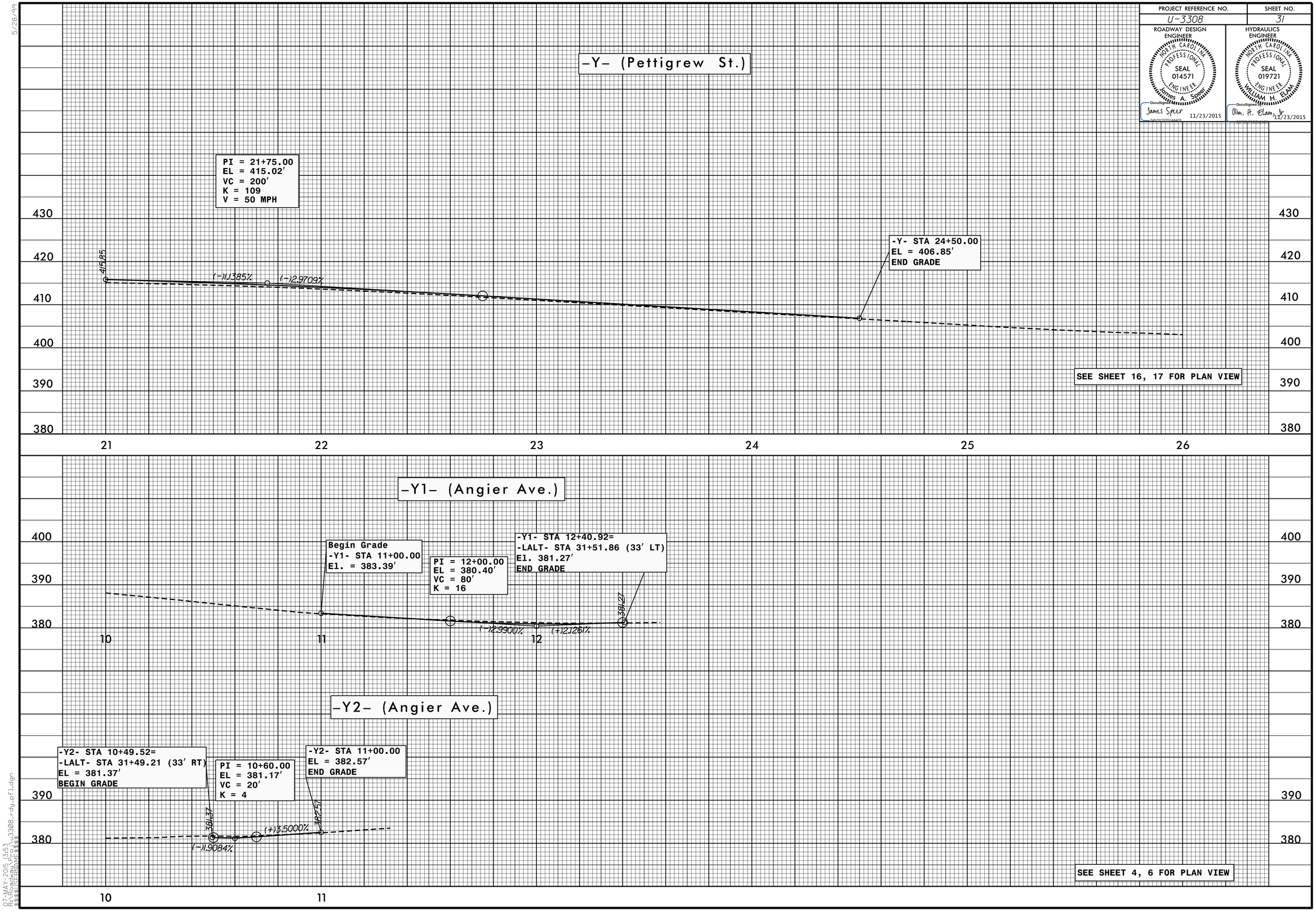

5/28/99

07-MAY-2015 13:53
R:\Roadway\Proj\u3308_rdy_pfl.dgn
$$$$USERNAME$$$$

PROJECT REFERENCE NO.	SHEET NO.
U-3308	32

ROADWAY DESIGN ENGINEER
NORTH CAROLINA PROFESSIONAL SEAL 014571 ENGINEER James A. Speer
DocuSigned: James Speer 11/23/2015

HYDRAULICS ENGINEER
NORTH CAROLINA PROFESSIONAL SEAL 019721 ENGINEER WILLIAM H. ELAM, JR.
DocuSigned: Wm. H. Elam, Jr. 11/23/2015

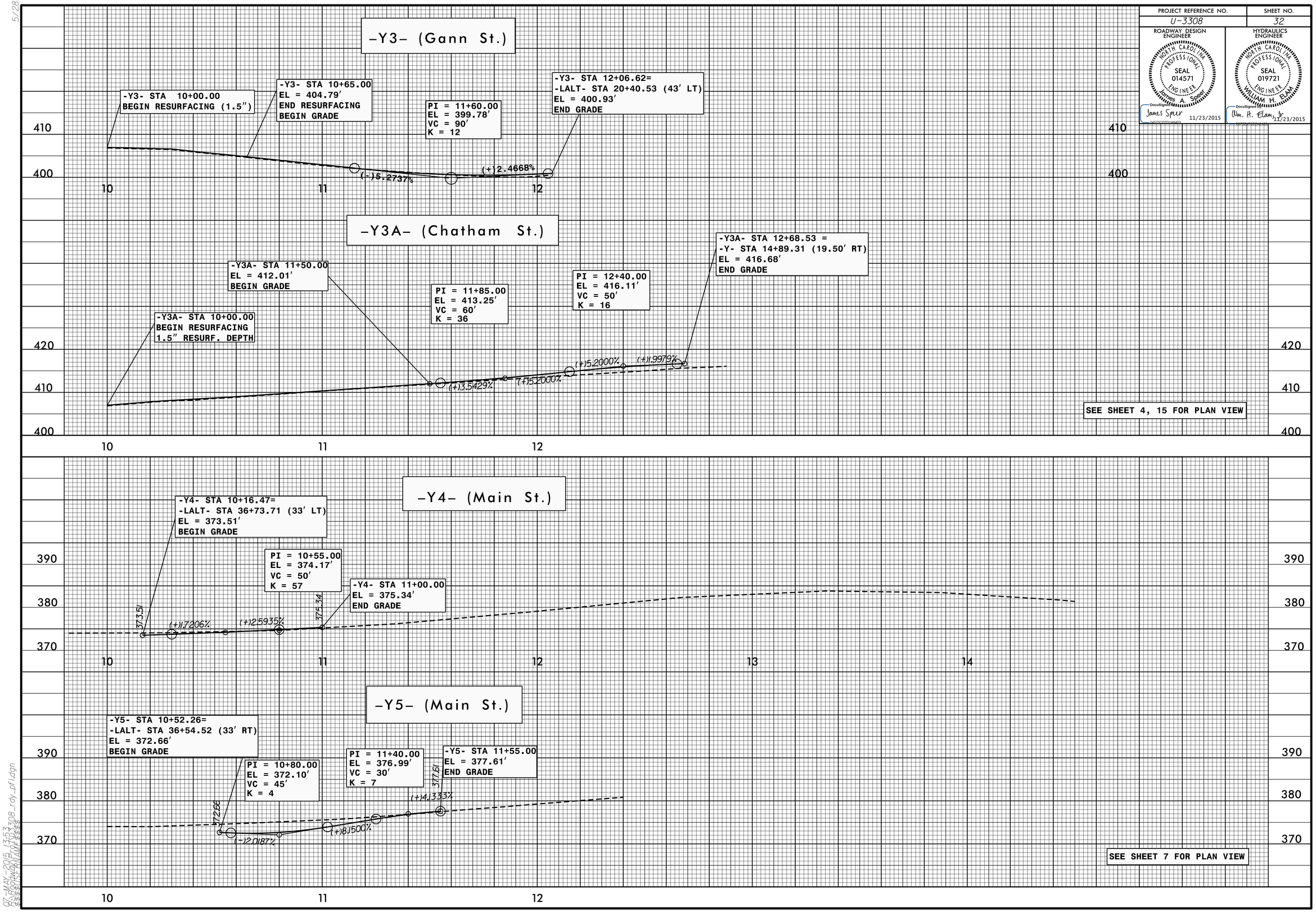

5/28/99

07-MAY-2015 13:53
S:\ROADWAY\DESIGN\U3308_rdy_pfl.dgn

PROJECT REFERENCE NO.	SHEET NO.
U-3308	33

ROADWAY DESIGN ENGINEER
NORTH CAROLINA PROFESSIONAL SEAL 014571 ENGINEER James A. Speer
DocuSigned James Speer 11/23/2015

HYDRAULICS ENGINEER
NORTH CAROLINA PROFESSIONAL SEAL 019721 ENGINEER WILLIAM H. ELAM, JR.
DocuSigned Wm. H. Elam, Jr. 11/23/2015

5/28/99

07-MAY-2015 13:53
R:\Roadway\Proj\u3308_rdy_pfl.dgn
$$$$USERNAME$$$$

PROJECT REFERENCE NO.	SHEET NO.
U-3308	34

ROADWAY DESIGN ENGINEER
NORTH CAROLINA PROFESSIONAL SEAL 014571 ENGINEER James A. Spear
DocuSigned James Spear 11/23/2015

HYDRAULICS ENGINEER
NORTH CAROLINA PROFESSIONAL SEAL 019721 ENGINEER WILLIAM H. ELAM, JR.
DocuSigned Wm. H. Elam, Jr. 11/23/2015

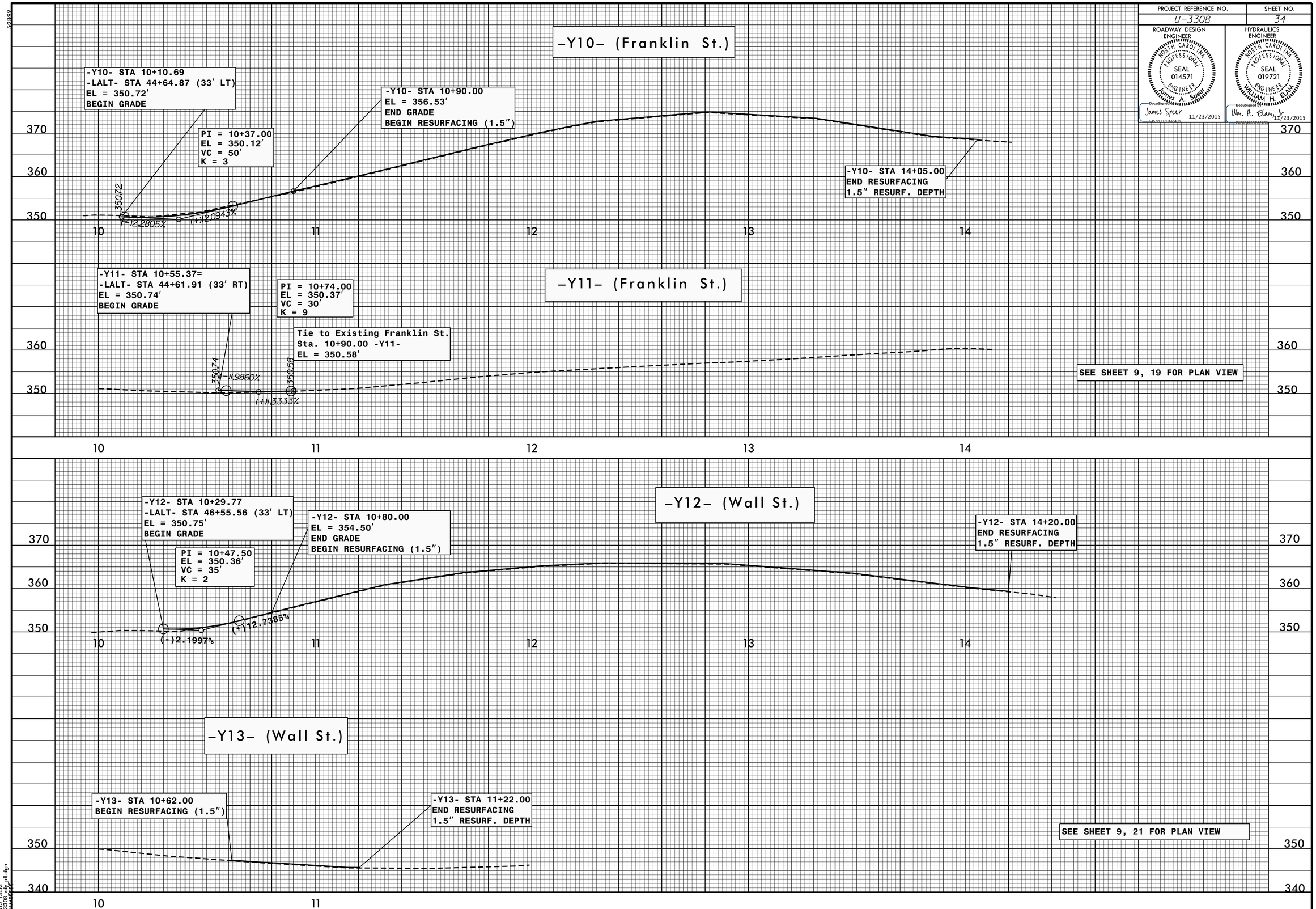

52899

7-MAY-2015 13:53
cpy\Proj\u3308_rdy_pfl.dgn
$$$USER$$$$$$$$

PROJECT REFERENCE NO.	SHEET NO.
U-3308	35

ROADWAY DESIGN ENGINEER
NORTH CAROLINA PROFESSIONAL SEAL 014571 ENGINEER James A. Spear
DocuSigned James Spear 11/23/2015

HYDRAULICS ENGINEER
NORTH CAROLINA PROFESSIONAL SEAL 019721 ENGINEER WILLIAM H. ELAM, JR.
DocuSigned Wm. H. Elam, Jr. 11/23/2015

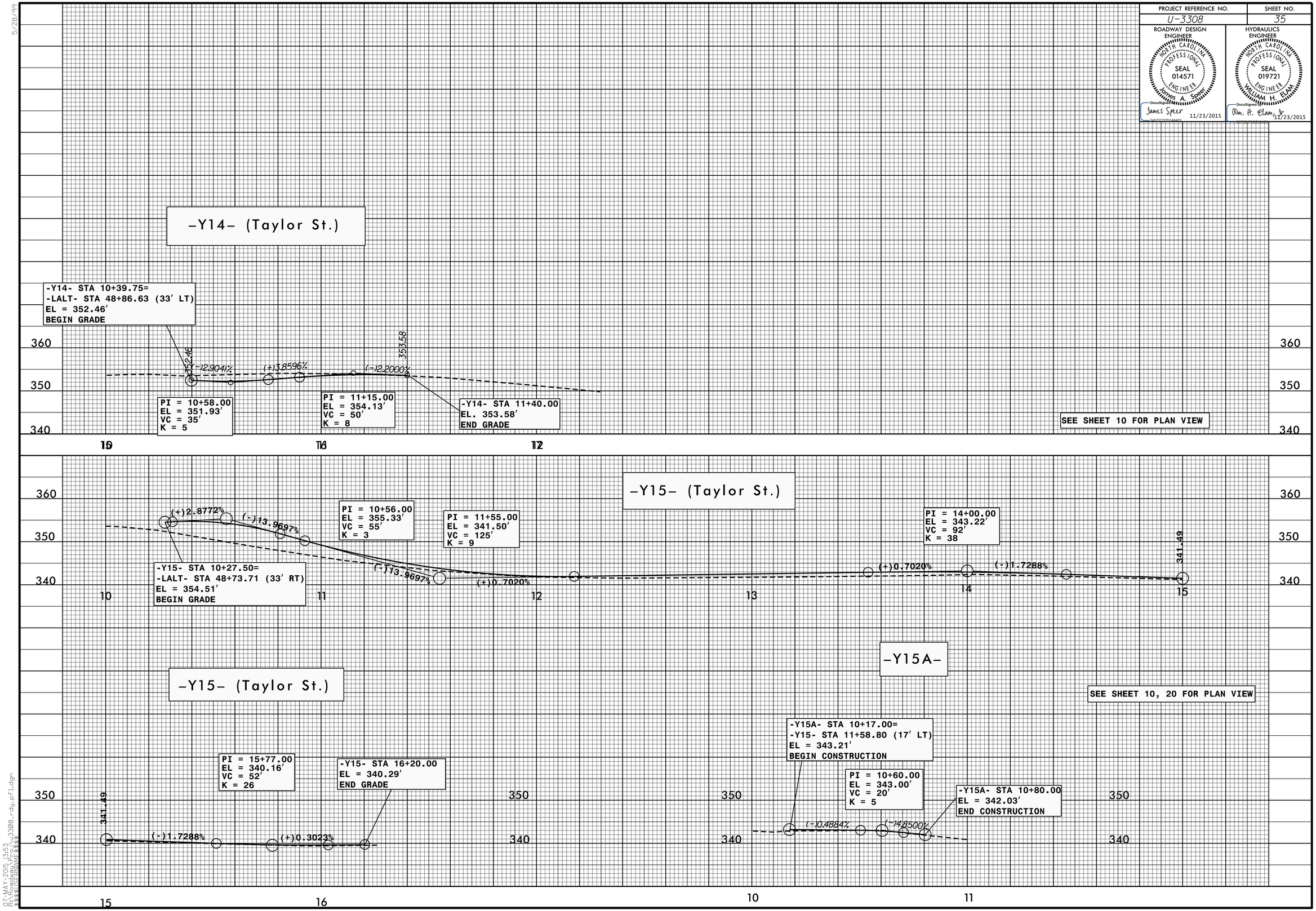

5/28/99

07-MAY-2015 13:53
R:\Roadway\Proj\u3308_rdy_pfl.dgn
$$$$USERNAME$$$$

PROJECT REFERENCE NO.	SHEET NO.
U-3308	36

ROADWAY DESIGN ENGINEER
NORTH CAROLINA PROFESSIONAL SEAL 014571 ENGINEER James A. Spear
DocuSigned by: James Spear 11/23/2015

HYDRAULICS ENGINEER
NORTH CAROLINA PROFESSIONAL SEAL 019721 ENGINEER WILLIAM H. ELAM, JR.
DocuSigned by: Wm. H. Elam, Jr. 11/23/2015

-Y16- (Hopkins St.)

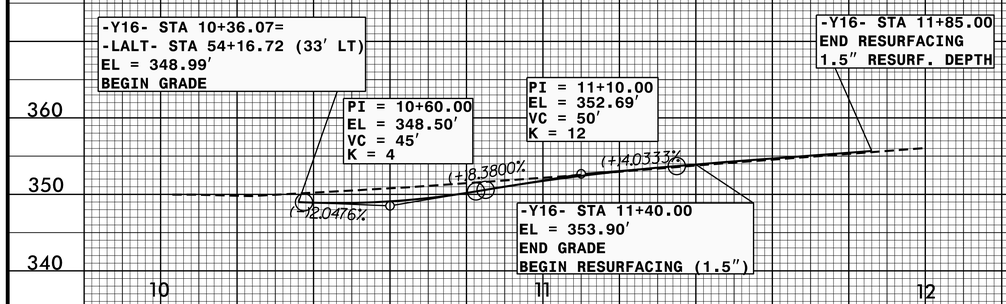

-Y17- (Hopkins St.)

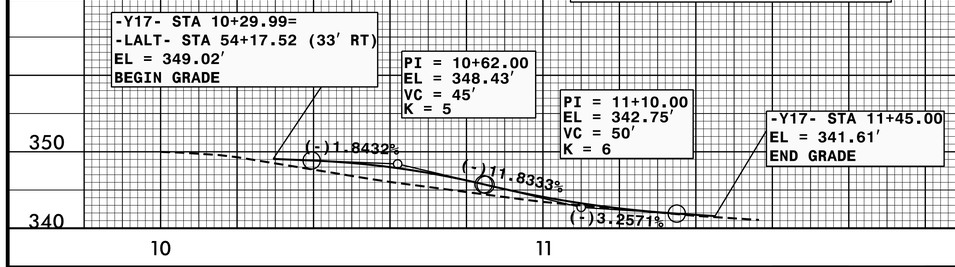

SEE SHEET 11 FOR PLAN VIEW

-Y18- (Liberty St.)

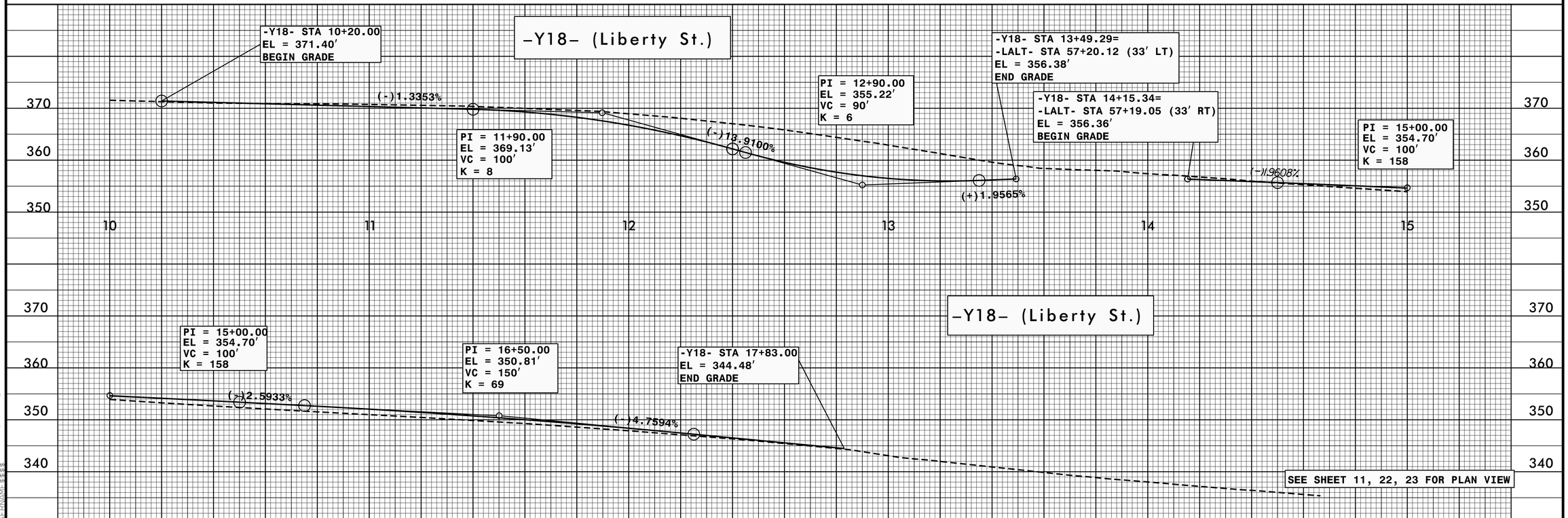

-Y18- (Liberty St.)

SEE SHEET 11, 22, 23 FOR PLAN VIEW

5/28/99
07-MAY-2015 13:53
R:\Roadway\Proj\u3308_rdy_pfl.dgn
$$$$USERNAME$$$$

PROJECT REFERENCE NO.	SHEET NO.
U-3308	37

ROADWAY DESIGN ENGINEER
NORTH CAROLINA PROFESSIONAL SEAL 014571 ENGINEER James A. Spear
DocuSigned James Spear 11/23/2015

HYDRAULICS ENGINEER
NORTH CAROLINA PROFESSIONAL SEAL 019721 ENGINEER WILLIAM H. ELAM, JR.
DocuSigned Wm. H. Elam, Jr. 11/23/2015

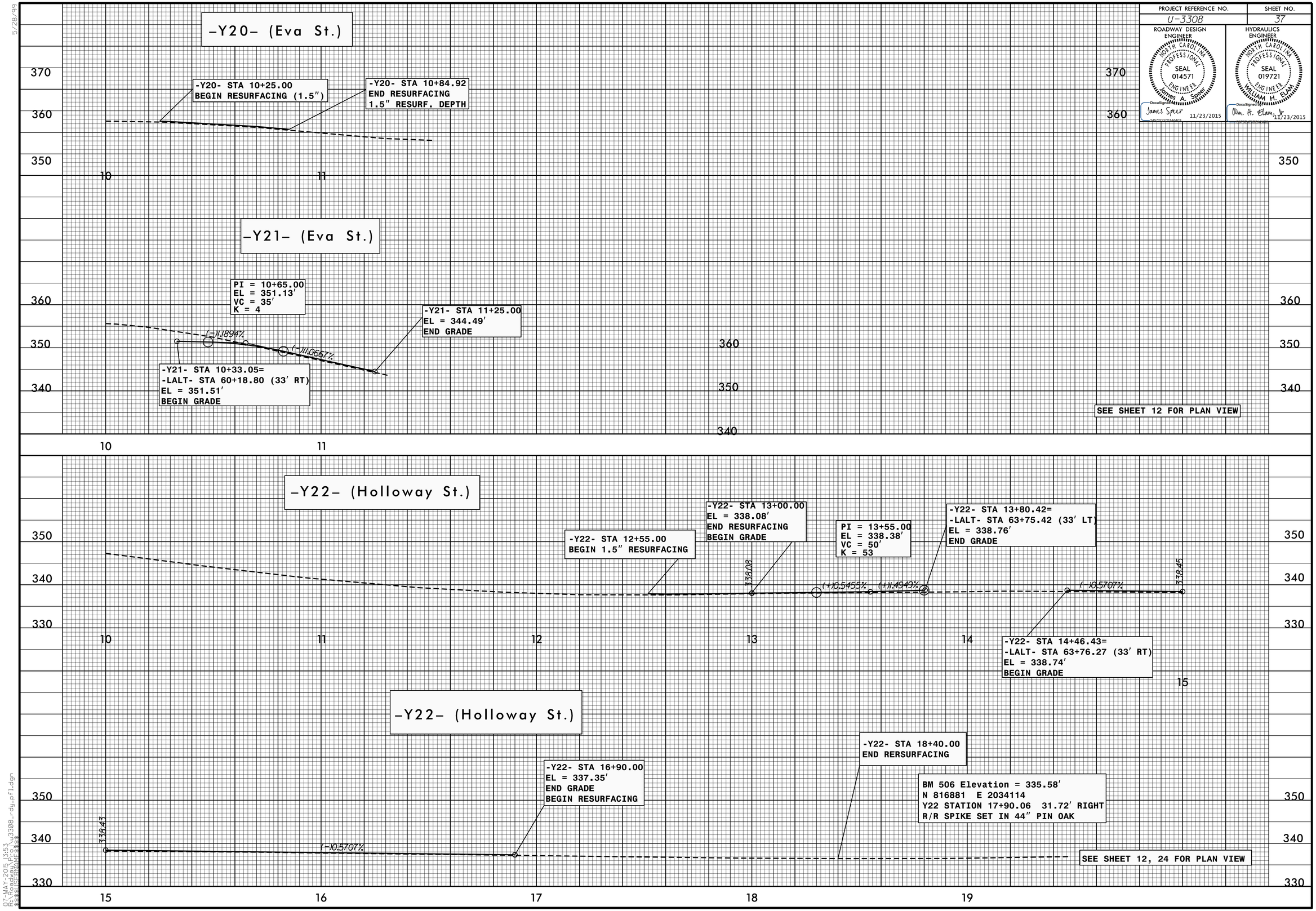

5/28/99

07-MAY-2015 13:53
R:\Roadway\Proj\u3308_rdy_pfl.dgn
$$$$USERNAME$$$$

PROJECT REFERENCE NO.	SHEET NO.
U-3308	38

ROADWAY DESIGN ENGINEER
NORTH CAROLINA PROFESSIONAL SEAL 014571 ENGINEER James A. Spear
DocuSigned James Spear 11/23/2015

HYDRAULICS ENGINEER
NORTH CAROLINA PROFESSIONAL SEAL 019721 ENGINEER WILLIAM H. ELAM, JR.
DocuSigned Wm. H. Elam, Jr. 11/23/2015

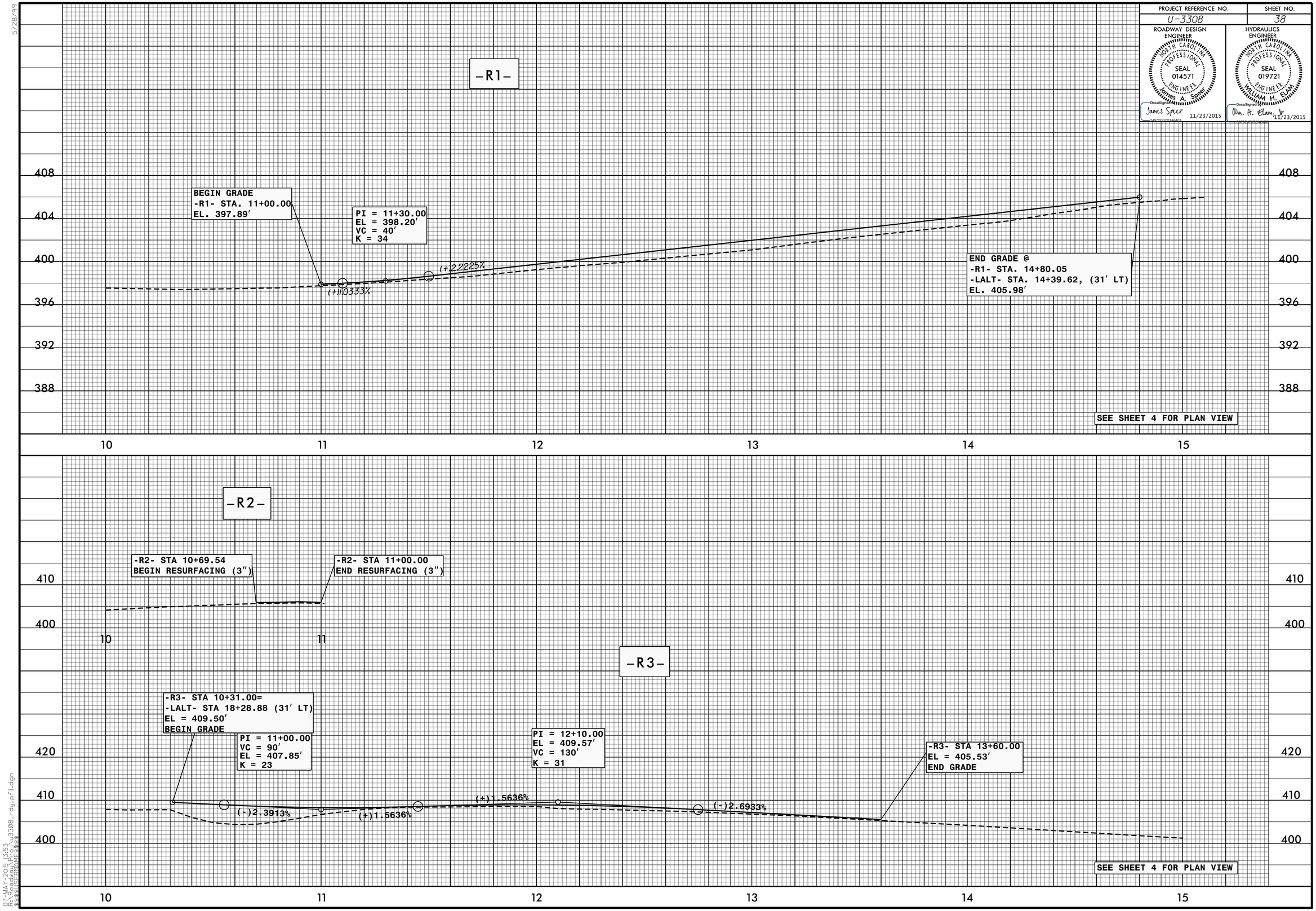

5/28/99

07-MAY-2015 13:53
R:\Roadway\Proj\u3308_rdy_pfl.dgn
$$$$USERNAME$$$$

PROJECT REFERENCE NO.	SHEET NO.
U-3308	39

ROADWAY DESIGN ENGINEER
NORTH CAROLINA PROFESSIONAL SEAL 014571 ENGINEER James A. Spear
DocuSigned: James Spear 11/23/2015

HYDRAULICS ENGINEER
NORTH CAROLINA PROFESSIONAL SEAL 019721 ENGINEER WILLIAM H. ELAM, JR.
DocuSigned: Wm. H. Elam, Jr. 11/23/2015

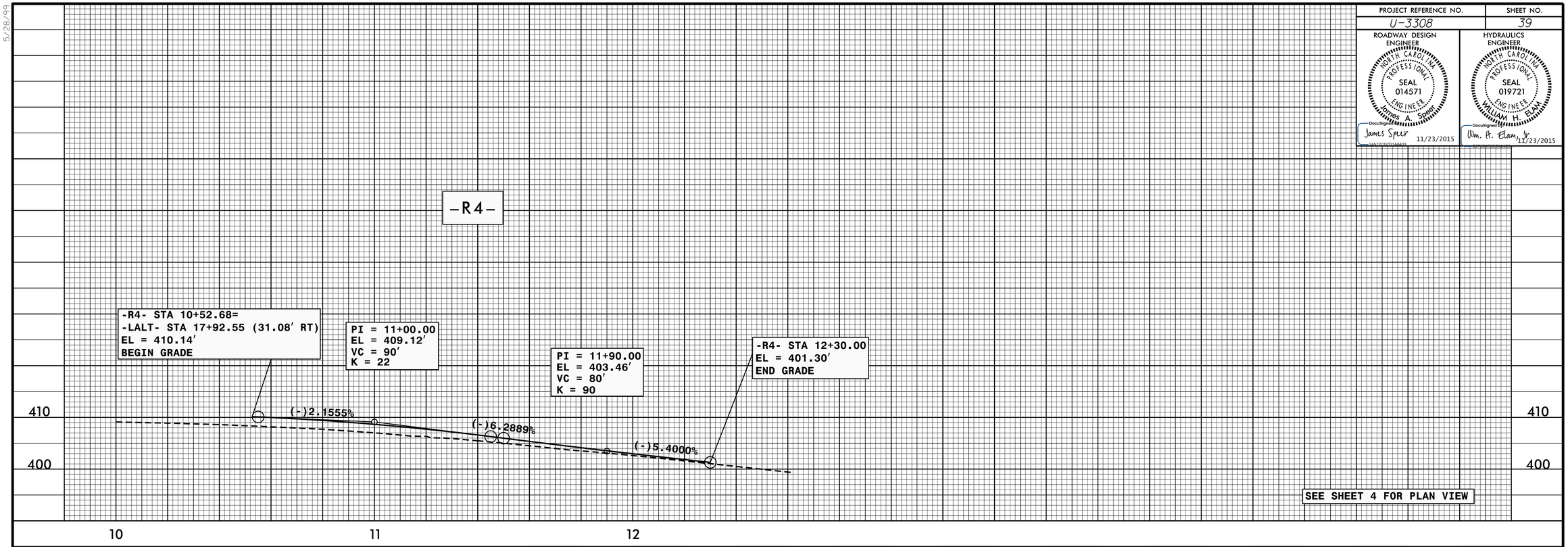

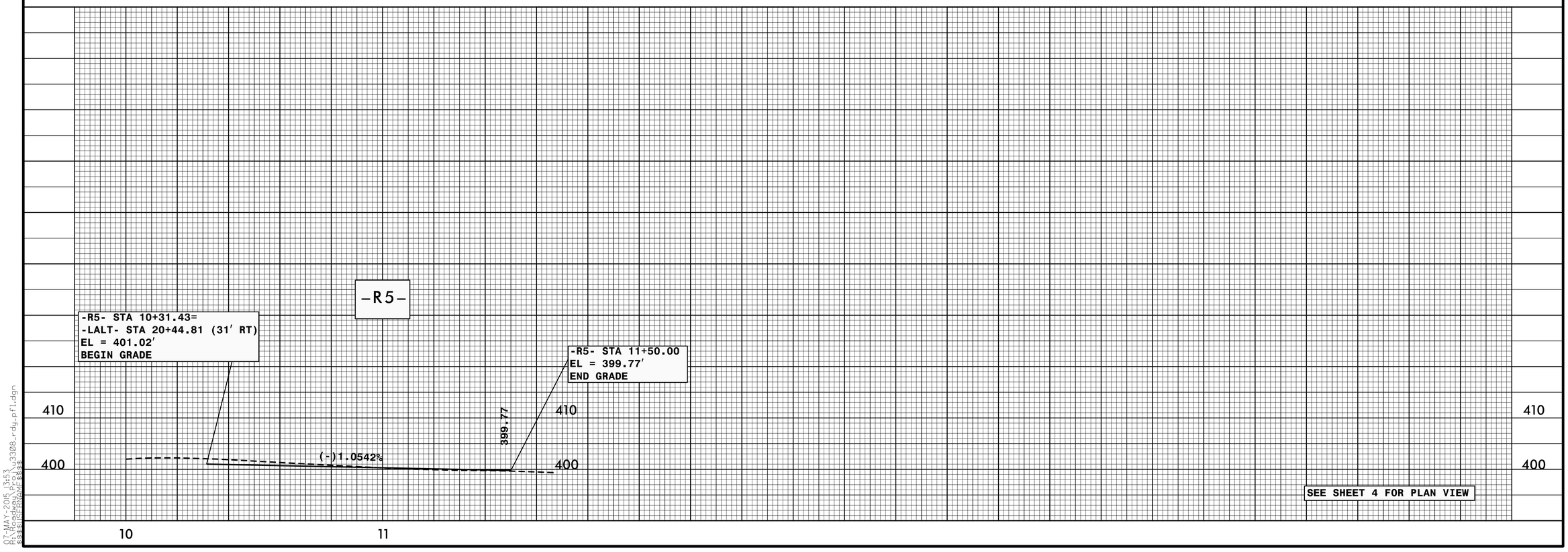

5/28/99
07-MAY-2015 13:53
R:\Roadway\Proj\u3308_rdy_pfl.dgn
$$$$USERNAME$$$$