NOTES

THE TOP SURFACE OF THE END BENT CAP AND WINGS, EXCEPT THE BEARING AREA, SHALL BE RAKED TO A DEPTH OF 1/4".

THE UPPER PORTION OF THE WINGS SHALL BE POURED WITH THE SUPERSTRUCTURE. CONCRETE AND REINFORCING STEEL QUANTITIES ARE INCLUDED IN THE SUPERSTRUCTURE BILL OF MATERIAL. FOR DETAILS, SEE SUPERSTRUCTURE PLANS.

INSTALL THE 4" DIA. DRAIN PIPE THROUGH THE WING WALL AS REQUIRED FOR REINFORCED BRIDGE APPROACH FILLS, SEE THE ROADWAY PLANS. REINFORCING STEEL IN THE WING WALL MAY BE SHIFTED AS NECESSARY TO CLEAR THE DRAIN PIPE.

FOR PILE SPLICE DETAILS, SEE END BENT 1.

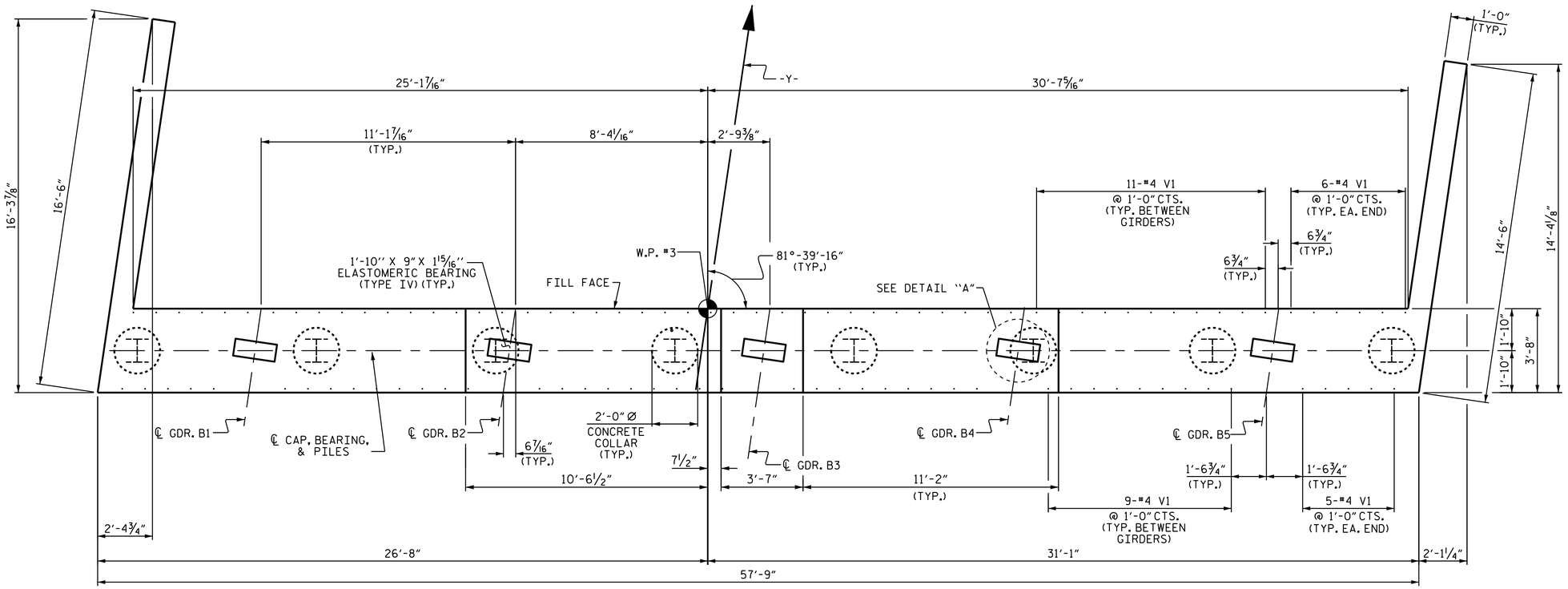

PLAN

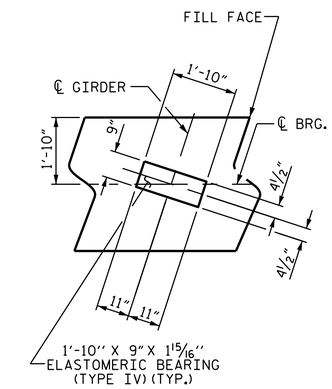

DETAIL "A"

(TYP. EA. BEARING)

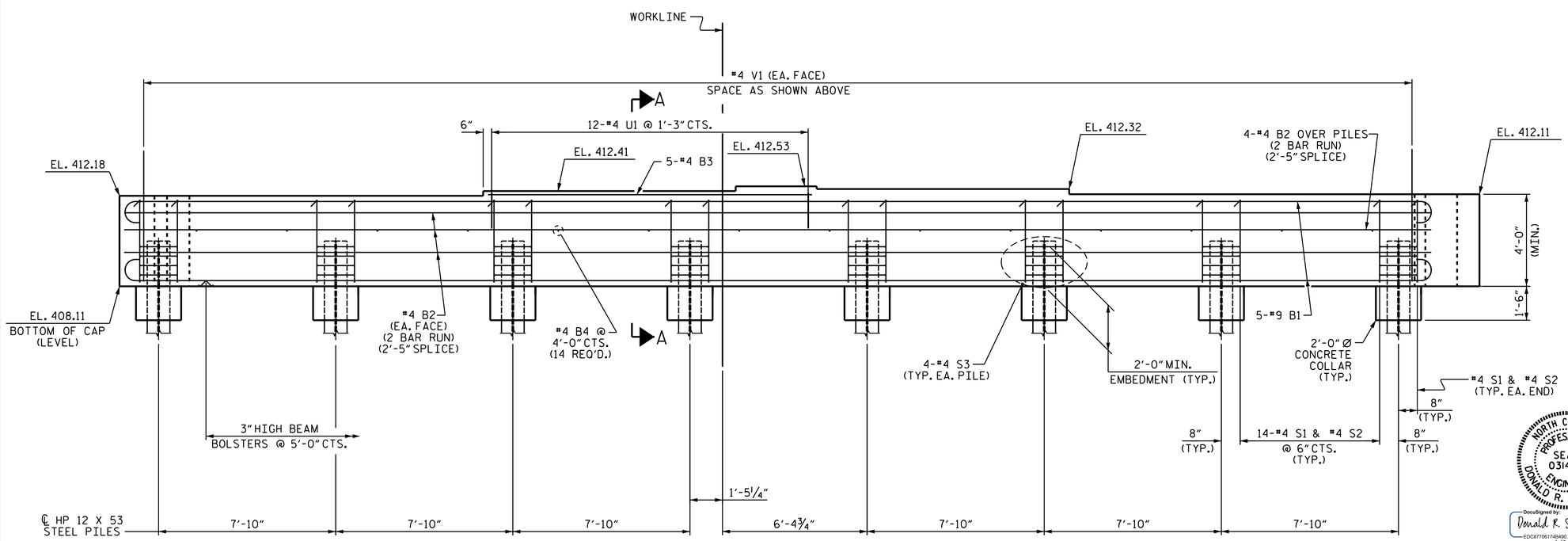

ELEVATION

PROJECT NO. U-3308

DURHAM COUNTY

STATION: 23+00.86-LALT-

SHEET 1 OF 2

STATE OF NORTH CAROLINA
DEPARTMENT OF TRANSPORTATION
RALEIGH

SUBSTRUCTURE

INTEGRAL END BENT 2

NORTH CAROLINA PROFESSIONAL SEAL 031480 ENGINEER DONALD R. SMITH, JR.

DocuSigned by: Donald R. Smith, Jr
EDC87706174849...
4/1/2016

DRAWN BY : J.D.HAWK DATE : 8/13/14
CHECKED BY : P.S. ADKINS DATE : 9/3/14
DESIGN ENGINEER OF RECORD: D.R. SMITH DATE : 11/3/14

22-MAR-2016 11:36
R:\Structures\Plans\str2\U3308_SD_E2_02.dgn
jdhawk

DOCUMENT NOT CONSIDERED FINAL UNLESS ALL SIGNATURES COMPLETED

REVISIONS								SHEET NO.
NO.	BY:	DATE:	NO.	BY:	DATE:			S2-28
1			3					TOTAL SHEETS
2			4					32

STR. #2