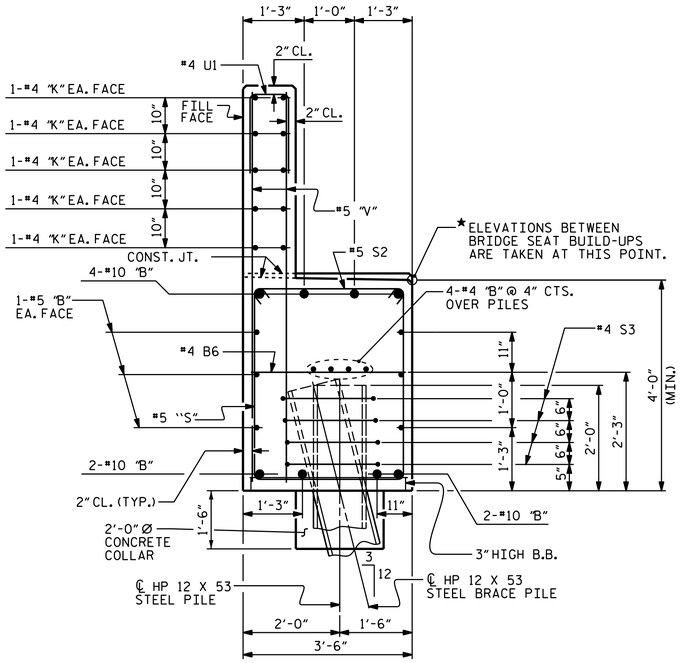


## SECTION A-A

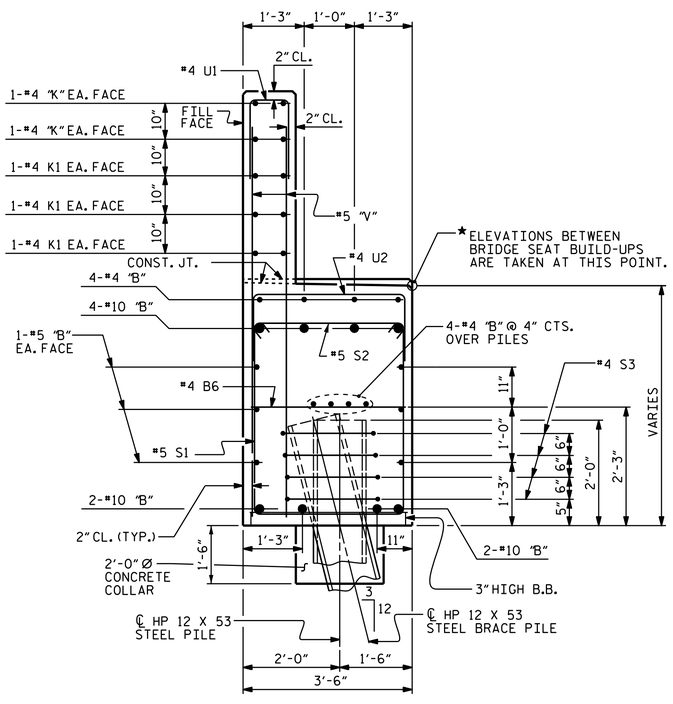


## SECTION B-B

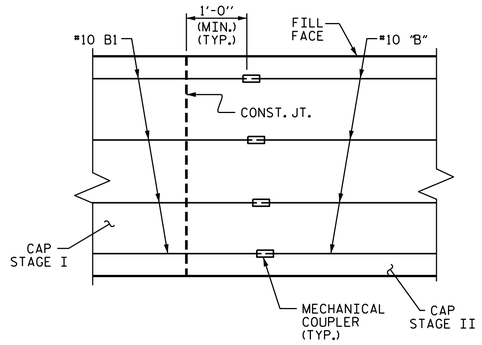


## MECHANICAL COUPLER DETAIL

PLAN VIEW OF TOP MAIN STEEL.
BOTTOM MAIN STEEL SIMILAR.

## BAR TYPES

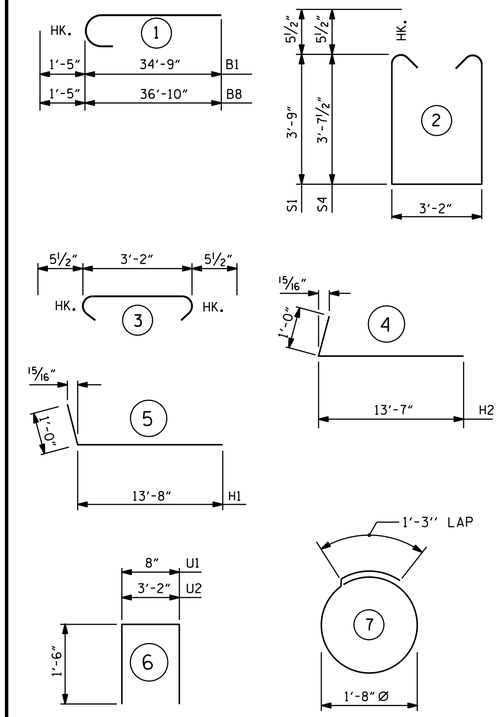


ALL BAR DIMENSIONS ARE OUT TO OUT.

## BILL OF MATERIAL — STAGE I

| BAR | NO. | SIZE | TYPE | LENGTH | WEIGHT |
|---|---|---|---|---|---|
| B1 | 8 | 10 | 1 | 36'-2" | 1,245 |
| B2 | 6 | 5 | STR | 36'-11" | 231 |
| B3 | 8 | 4 | STR | 19'-8" | 105 |
| B4 | 4 | 4 | STR | 2'-7" | 7 |
| B5 | 4 | 4 | STR | 11'-3" | 30 |
| B6 | 8 | 4 | STR | 3'-2" | 17 |
| H1 | 40 | 6 | 5 | 14'-8" | 881 |
| K1 | 20 | 4 | STR | 19'-8" | 263 |
| K3 | 4 | 4 | STR | 3'-5" | 9 |
| S1 | 35 | 5 | 2 | 11'-7" | 423 |
| S2 | 35 | 5 | 3 | 4'-1" | 149 |
| S3 | 20 | 4 | 7 | 6'-6" | 87 |
| U1 | 30 | 4 | 6 | 3'-8" | 73 |
| U2 | 13 | 4 | 6 | 6'-2" | 54 |
| V1 | 60 | 5 | STR | 7'-9" | 485 |
| V2 | 38 | 5 | STR | 9'-9" | 386 |

REINFORCING STEEL 4,445 LBS.

CLASS A CONCRETE BREAKDOWN

POUR 1 CAP, LOWER PART OF WINGS & CONCRETE COLLARS 22.0 CU. YDS.

POUR 2 BACKWALL & UPPER PART OF WINGS 8.4 CU. YDS.

TOTAL CLASS A CONCRETE 30.4 CU. YDS.

HP 12 X 53 STEEL PILES
NO. 5 225 LIN. FT.

## BILL OF MATERIAL — STAGE II

| BAR | NO. | SIZE | TYPE | LENGTH | WEIGHT |
|---|---|---|---|---|---|
| B4 | 8 | 4 | STR | 2'-7" | 14 |
| B6 | 17 | 4 | STR | 3'-2" | 36 |
| B7 | 4 | 10 | STR | 33'-0" | 568 |
| B8 | 8 | 10 | 1 | 38'-3" | 1,317 |
| B9 | 4 | 10 | STR | 36'-2" | 623 |
| B10 | 12 | 5 | STR | 33'-0" | 413 |
| B11 | 4 | 4 | STR | 27'-1" | 72 |
| B12 | 12 | 4 | STR | 22'-7" | 181 |
| H2 | 40 | 6 | 4 | 14'-7" | 876 |
| K2 | 30 | 4 | STR | 22'-7" | 453 |
| K4 | 4 | 4 | STR | 3'-11" | 10 |
| S1 | 37 | 5 | 2 | 11'-7" | 447 |
| S2 | 64 | 5 | 3 | 4'-1" | 273 |
| S3 | 32 | 4 | 7 | 6'-6" | 139 |
| S4 | 27 | 5 | 2 | 11'-4" | 319 |
| U1 | 59 | 4 | 6 | 3'-8" | 145 |
| U2 | 25 | 4 | 6 | 6'-2" | 103 |
| V3 | 118 | 5 | STR | 7'-7" | 933 |
| V4 | 38 | 5 | STR | 9'-8" | 383 |

REINFORCING STEEL 7,305 LBS.

CLASS A CONCRETE BREAKDOWN

POUR 3 CAP, LOWER PART OF WINGS & CONCRETE COLLARS 39.6 CU. YDS.

POUR 4 BACKWALL & UPPER PART OF WINGS 12.9 CU. YDS.

TOTAL CLASS A CONCRETE 52.5 CU. YDS.

HP 12 X 53 STEEL PILES
NO. 8 360 LIN. FT.

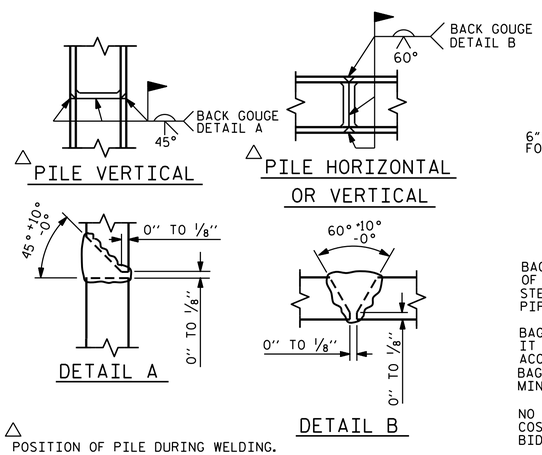


△ POSITION OF PILE DURING WELDING.

## PILE SPLICE DETAILS

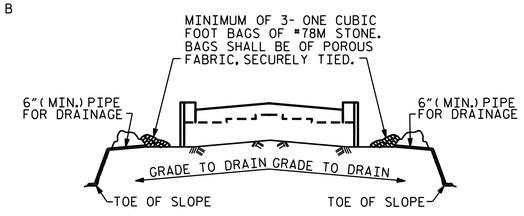


BAGGED STONE AND PIPE SHALL BE PLACED IMMEDIATELY AFTER COMPLETION OF END BENT EXCAVATION. PIPE MAY BE EITHER CONCRETE, CORRUGATED STEEL, CORRUGATED ALUMINUM ALLOY, OR CORRUGATED PLASTIC. PERFORATED PIPE WILL NOT BE ALLOWED.

BAGGED STONE SHALL REMAIN IN PLACE UNTIL THE ENGINEER DIRECTS THAT IT BE REMOVED. THE CONTRACTOR SHALL REMOVE AND DISPOSE OF SILT ACCUMULATIONS AT BAGGED STONE WHEN SO DIRECTED BY THE ENGINEER. BAGS SHALL BE REMOVED AND REPLACED WHENEVER THE ENGINEER DETERMINES THAT THEY HAVE DETERIORATED AND LOST THEIR EFFECTIVENESS.

NO SEPARATE PAYMENT WILL BE MADE FOR THIS WORK AND THE ENTIRE COST OF THIS WORK SHALL BE INCLUDED IN THE UNIT CONTRACT PRICE BID FOR THE SEVERAL PAY ITEMS.

## TEMPORARY DRAINAGE AT END BENT

PROJECT NO. U-3308
DURHAM COUNTY
STATION: 16+42.70-LALT-

SHEET 4 OF 4

STATE OF NORTH CAROLINA
DEPARTMENT OF TRANSPORTATION
RALEIGH

SUBSTRUCTURE

END BENT 2

NORTH CAROLINA PROFESSIONAL SEAL 031480 ENGINEER DONALD R. SMITH, JR.

DocuSigned by: Donald R. Smith, Jr
EDC87706174849...
4/1/2016

DOCUMENT NOT CONSIDERED FINAL UNLESS ALL SIGNATURES COMPLETED

| REVISIONS | | | | | | | | SHEET NO. |
|---|---|---|---|---|---|---|---|---|
| NO. | BY: | DATE: | NO. | BY: | DATE: | | | S1-42 |
| 1 | | | 3 | | | | | TOTAL SHEETS |
| 2 | | | 4 | | | | | 47 |

STR. #1

DRAWN BY : P.S. ADKINS DATE : 11/18/14
CHECKED BY : J.D. HAWK DATE : 11/20/14
DESIGN ENGINEER OF RECORD: H. LOCKLEAR DATE : 12/17/14

22-MAR-2016 10:36
R:\Structures\Plans\str1\U3308_sd_E2_01.dgn
jdhawk