## NOTES

REPAIR LOCATIONS AND ESTIMATED QUANTITIES ARE GIVEN WITH THE BEST INFORMATION AVAILABLE. IF ADDITIONAL REPAIRS NOT SHOWN ON THE DRAWINGS ARE DEEMED NECESSARY BY THE ENGINEER, THE ENGINEER WILL NOTE ON THE DRAWINGS THE APPROXIMATE LOCATIONS AND DESCRIPTION OF THE REPAIRS AND ADJUST THE ACTUAL QUANTITIES ENTERED INTO THE AS-BUILT REPAIR QUANTITY TABLE.

FOR CAP REPAIRS, SEE "TYPICAL CAP AND COLUMN REPAIR DETAILS" SHEET.

## AS-BUILT REPAIR QUANTITY TABLE

| REPAIRS BENT 2 | QUANTITIES | | | |
|---|---|---|---|---|
| | ESTIMATE | | ACTUAL | |
| SHOTCRETE REPAIRS | AREA SF | VOLUME CF | AREA SF | VOLUME CF |
| CAP | 0.0 | 0.0 | | |
| COLUMN | 0.0 | 0.0 | | |
| | | | | |
| | | | | |
| EPOXY RESIN INJECTION | | LN. FT | | LN. FT |
| CAP | | 0.0 | | |
| COLUMN | | 0.0 | | |
| | | | | |
| EPOXY COATING | | SQ. FT | | SQ. FT |
| TOP OF BENT CAP | | 0 | | |

VALUES IN CHARTS REPRESENT ESTIMATED REPAIR TOTALS AFTER REMOVAL OF UNSOUND CONCRETE, MIN. OF 1" BEHIND REBAR AND MIN. 1" CLEAR TO SAWCUT.

NO REPAIRS NOTED FOR BENT 2 DURING INSPECTION BY STRUCTURES MANAGEMENT UNIT. THE CONTRACTOR AND ENGINEER SHALL INSPECT THE BENT PRIOR TO BEGINNING WORK.

DAMAGED AREA

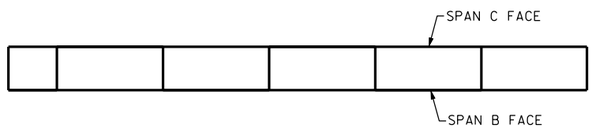


TOP OF CAP

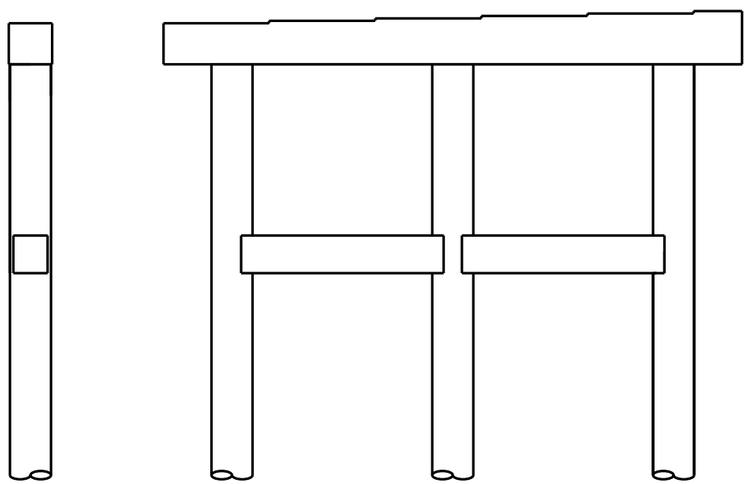

END VIEW
NORTH FACE

SPAN B FACE

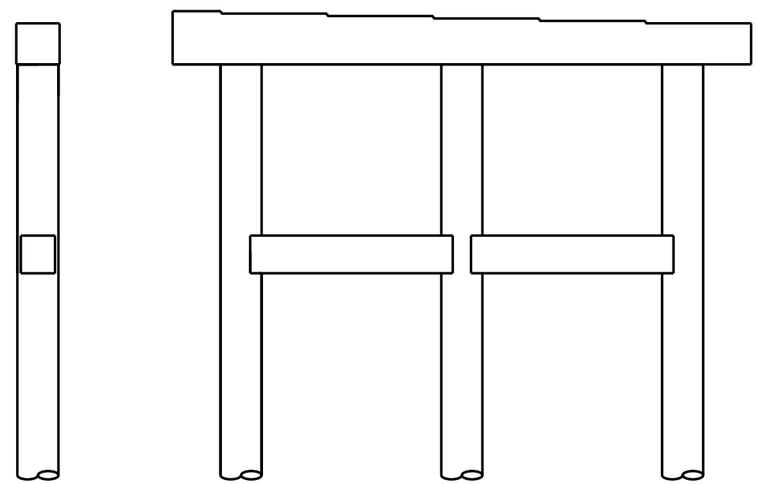

END VIEW
SOUTH FACE

SPAN C FACE

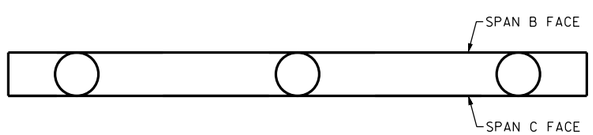


UNDERSIDE OF CAP

PROJECT NO. I-5756
HAYWOOD COUNTY
BRIDGE NO. 232
SHEET 2 OF 2

DocuSigned by:
John A. Yannaccone
7BC36E9C...

NORTH CAROLINA PROFESSIONAL SEAL 32492 ENGINEER JOHN A. YANNACCONE

3/21/2016

STATE OF NORTH CAROLINA
DEPARTMENT OF TRANSPORTATION
RALEIGH

BENT 2

| REVISIONS | | | | | | | SHEET NO. |
|---|---|---|---|---|---|---|---|
| NO. | BY: | DATE: | NO. | BY: | DATE: | | S-118 |
| 1 | | | 3 | | | | TOTAL SHEETS |
| 2 | | | 4 | | | | 122 |

DOCUMENT NOT CONSIDERED FINAL UNLESS ALL SIGNATURES COMPLETED

DRAWN BY : W. O. KEITH DATE : 11/15
CHECKED BY : J. YANNACCONE DATE : 12/15

21-MAR-2016 13:17
R:\Structures\FinalDrawings\430232\430232_SD_B*.dgn
jayannaccone