TIP PROJECT: B-5344

CONTRACT: C203728

STRUCTURE

| STATE | STATE PROJECT REFERENCE NO. | SHEET NO. | TOTAL SHEETS |
|---|---|---|---|
| N.C. | B-5344 | | |

| STATE PROJ. NO. | F. A. PROJ. NO. | DESCRIPTION |
|---|---|---|
| 46058.1.1 | BRZ-2821(1) | P.E. |
| 46058.2.1 | BRZ-2821(1) | UTIL. & R/W |
| 46058.3.1 | BRZ-2821(1) | CONST. |

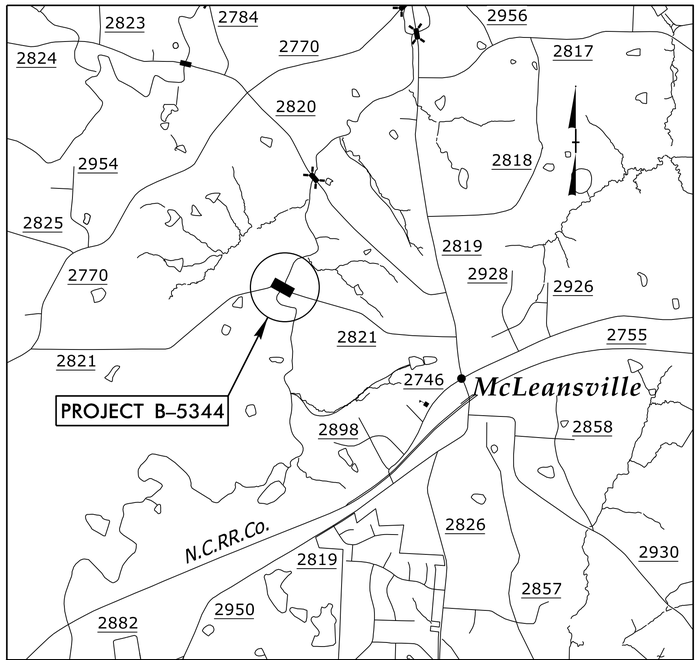


VICINITY MAP

# STATE OF NORTH CAROLINA
## DIVISION OF HIGHWAYS

# GUILFORD COUNTY

***LOCATION: BRIDGE NO. 161 OVER SOUTH BUFFALO CREEK ON SR 2821 (HARVEST ROAD)***

***TYPE OF WORK: GRADING, DRAINAGE, PAVING, AND STRUCTURE***

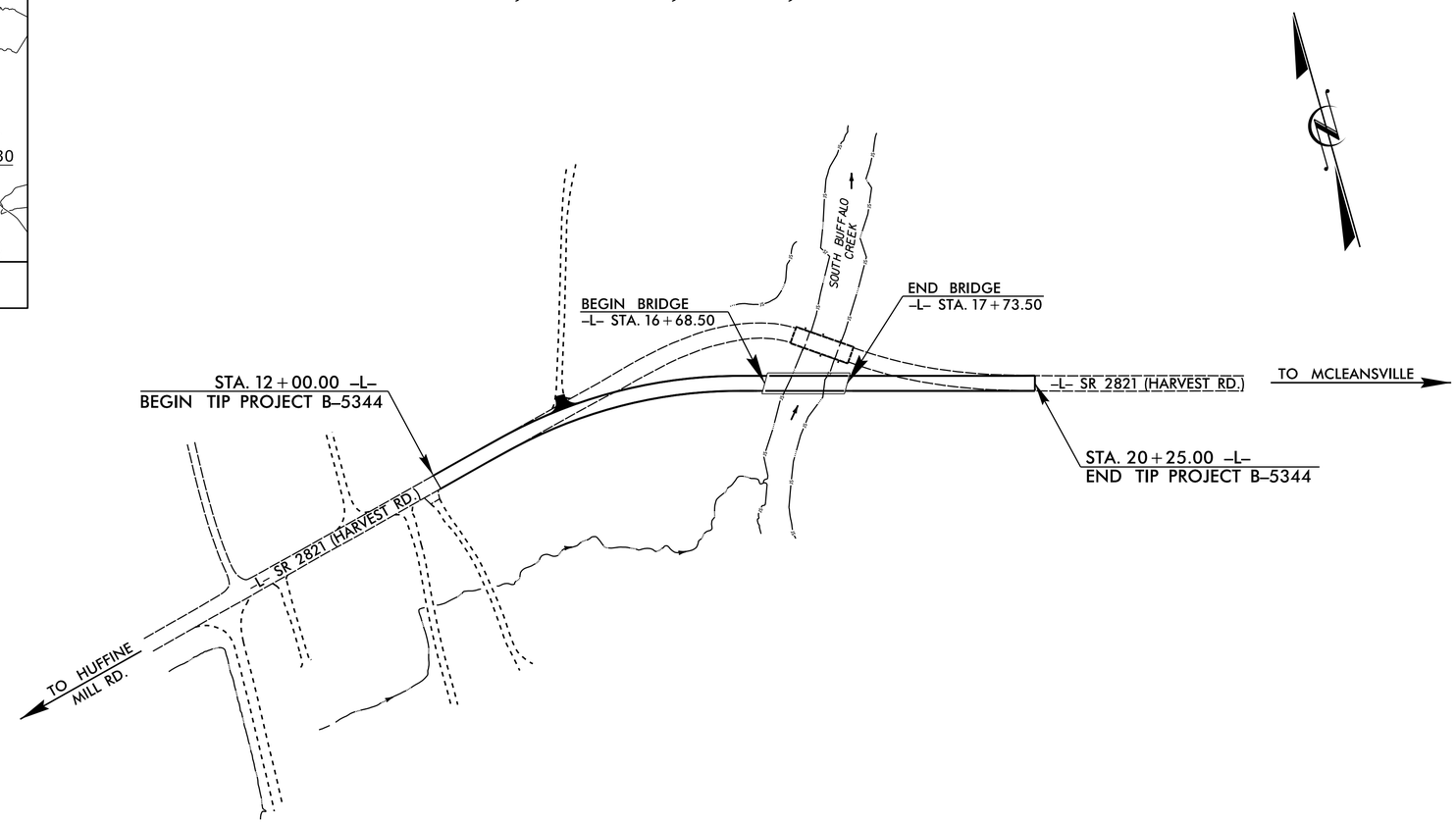


STATE OF NORTH CAROLINA DEPARTMENT OF TRANSPORTATION

### *DESIGN DATA*

ADT 2016 = 430
ADT 2040 = 600
K = 12 %
D = 55 %
T = 7 % *
V = 40 MPH
* (TTST =1% + DUAL 6%)
FUNC CLASS = LOCAL
SUBREGIONAL TIER

### *PROJECT LENGTH*

*LENGTH ROADWAY TIP PROJECT B-5344 = 0.136 MI*
*LENGTH STRUCTURE TIP PROJECT B-5344 = 0.020 MI*
*TOTAL LENGTH TIP PROJECT B-5344 = 0.156 MI*

*Prepared In the Office of:*

***DIVISION OF HIGHWAYS***
*STRUCTURES MANAGEMENT UNIT*
*1000 BIRCH RIDGE DR.*
*RALEIGH, N.C. 27610*

*2012 STANDARD SPECIFICATIONS*

*LETTING DATE :* MAY 17, 2016

J. M. BAILEY, P.E.
*PROJECT ENGINEER*

T. H. FANG, P.E.
*PROJECT DESIGN ENGINEER*

F.A. PROJECT NO. BRZ-2821(1)

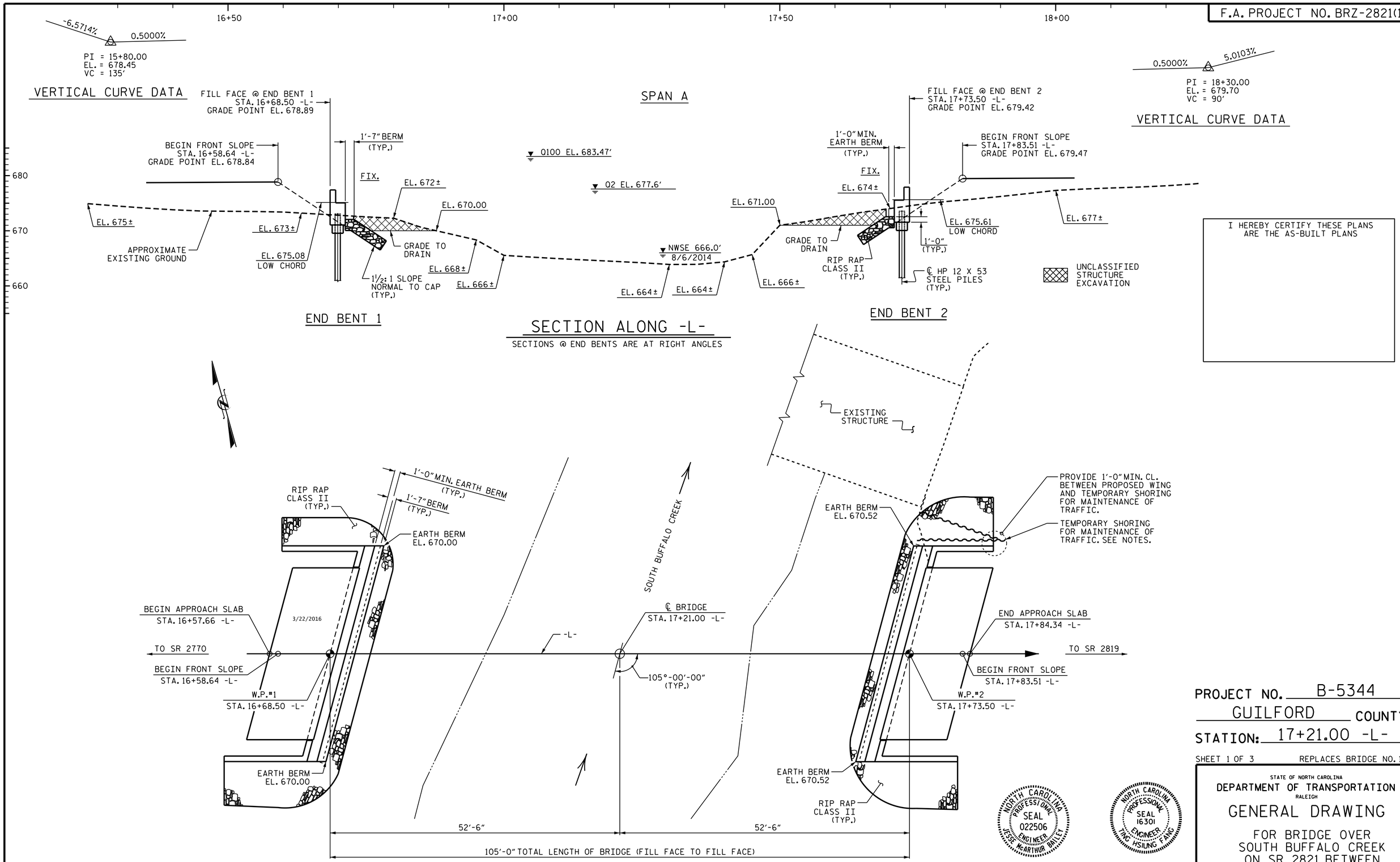


PROJECT NO. B-5344

GUILFORD COUNTY

STATION: 17+21.00 -L-

SHEET 1 OF 3 REPLACES BRIDGE NO. 161

STATE OF NORTH CAROLINA
DEPARTMENT OF TRANSPORTATION
RALEIGH

# GENERAL DRAWING

FOR BRIDGE OVER
SOUTH BUFFALO CREEK
ON SR 2821 BETWEEN
SR 2770 & SR 2819

| REVISIONS | | | | | | | SHEET NO. |
|---|---|---|---|---|---|---|---|
| NO. | BY: | DATE: | NO. | BY: | DATE: | | S-1 |
| 1 | | | 3 | | | | TOTAL SHEETS |
| 2 | | | 4 | | | | 16 |

DOCUMENT NOT CONSIDERED FINAL UNLESS ALL SIGNATURES COMPLETED

DRAWN BY : T. L. AVERETTE DATE : 3-9-15
CHECKED BY : D. J. POZOS DATE : 8-03-15
DESIGN ENGINEER OF RECORD: T. H. FANG DATE : 2/2/16

22-MAR-2016 11:55
K:\TIPProjects-B\B5344\Structures\Plans\FinalPlans\b5344_sd_bb.dgn
ttfang

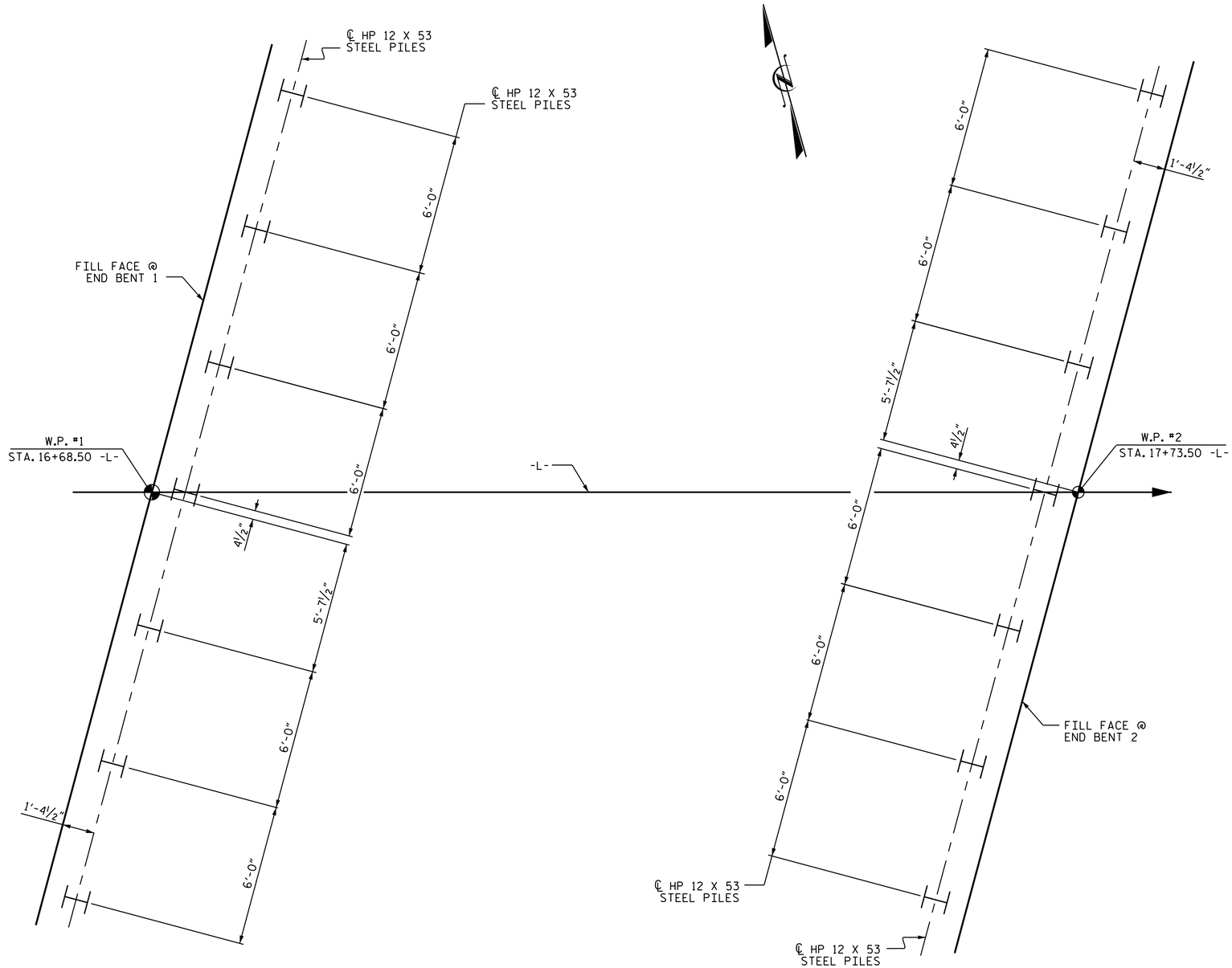


## FOUNDATION LAYOUT

DIMENSIONS LOCATING PILES ARE SHOWN TO THE CENTERLINE OF PILES.

## NOTES

FOR PILES, SEE GEOTECHNICAL SPECIAL PROVISIONS AND SECTION 450 OF THE STANDARD SPECIFICATIONS.

PILES AT END BENTS 1 AND 2 ARE DESIGNED FOR A FACTORED RESISTANCE OF 115 TONS PER PILE.

DRIVE PILES AT END BENTS 1 AND 2 TO A REQUIRED DRIVING RESISTANCE OF 195 TONS PER PILE.

DRILLED-IN PILES ARE REQUIRED TO INSTALL PILES FOR END BENT 1. EXCAVATE HOLES AT PILE LOCATIONS TO ELEVATION 661.0 FT. FOR PILE EXCAVATION, SEE SECTION 450 OF THE STANDARD SPECIFICATIONS.

DRILLED-IN PILES ARE REQUIRED TO INSTALL PILES FOR END BENT 2. EXCAVATE HOLES AT PILE LOCATIONS TO ELEVATION 661.5 FT. FOR PILE EXCAVATION, SEE SECTION 450 OF THE STANDARD SPECIFICATIONS.

CONCRETE OR GROUT IS REQUIRED TO FILL HOLES FOR PILE EXCAVATION AT END BENTS 1 AND 2.

PROJECT NO. B-5344
GUILFORD COUNTY
STATION: 17+21.00 -L-

SHEET 2 OF 3

STATE OF NORTH CAROLINA
DEPARTMENT OF TRANSPORTATION
RALEIGH

GENERAL DRAWING

FOR BRIDGE OVER
SOUTH BUFFALO CREEK
ON SR 2821 BETWEEN
SR 2770 & SR 2819

NORTH CAROLINA PROFESSIONAL SEAL 16301 ENGINEER TING HSIUNG FANG

DocuSigned by: Ting Fang E720884009774351... 3/22/2016

DOCUMENT NOT CONSIDERED FINAL UNLESS ALL SIGNATURES COMPLETED

| REVISIONS | | | | | | | |
|---|---|---|---|---|---|---|---|
| NO. | BY: | DATE: | NO. | BY: | DATE: | | |
| 1 | | | 3 | | | | |
| 2 | | | 4 | | | | |

SHEET NO. S-2
TOTAL SHEETS 16

DRAWN BY : H. B. DESAI DATE : 5-22-15
CHECKED BY : D.J. POZOS DATE : 8-03-15

22-MAR-2016 11:55
K:\TIPProjects-B\B5344\Structures\Plans\FinalPlans\b5344_sd_bb.dgn
ttfang

## TOTAL BILL OF MATERIAL

| | REMOVAL OF EXISTING STRUCTURE | PILE EXCAVATION IN SOIL | PILE EXCAVATION NOT IN SOIL | UNCLASSIFIED STRUCTURE EXCAVATION | CLASS A CONCRETE | BRIDGE APPROACH SLABS | REINFORCING STEEL | HP 12 X 53 STEEL PILES | | RIP RAP CLASS II (2'-0" THICK) | GEOTEXTILE FOR DRAINAGE | ELASTOMERIC BEARINGS | 3'-0" X 3'-3" PRESTRESSED CONCRETE BOX BEAMS | | ASBESTOS ASSESSMENT | VERTICAL CONCRETE BARRIER RAIL (2'-11" HIGH) |
|---|---|---|---|---|---|---|---|---|---|---|---|---|---|---|---|---|
| | LUMP SUM | LIN. FT. | LIN. FT. | LUMP SUM | CU. YDS. | LUMP SUM | LBS. | NO. | LIN. FT. | TON | SQ. YD. | LUMP SUM | NO. | LIN. FT. | LUMP SUM | LIN. FT. |
| SUPERSTRUCTURE | | | | | | | | | | | | LUMP SUM | 11 | 1,129.39 | LUMP SUM | 205.3 |
| END BENT 1 | | 28 | 42 | LUMP SUM | 29.7 | | 4,699 | 7 | 70 | 45 | 50 | | | | | |
| END BENT 2 | | 48 | 22 | LUMP SUM | 28.5 | | 4,298 | 7 | 70 | 50 | 55 | | | | | |
| TOTAL | LUMP SUM | 76 | 64 | LUMP SUM | 58.2 | LUMP SUM | 8,997 | 14 | 140 | 95 | 105 | LUMP SUM | 11 | 1,129.39 | LUMP SUM | 205.3 |

BM #1: RR SPIKE IN 13" BIRCH, STA. 18+41.00 -L-, 129' LEFT, EL. = 687.77

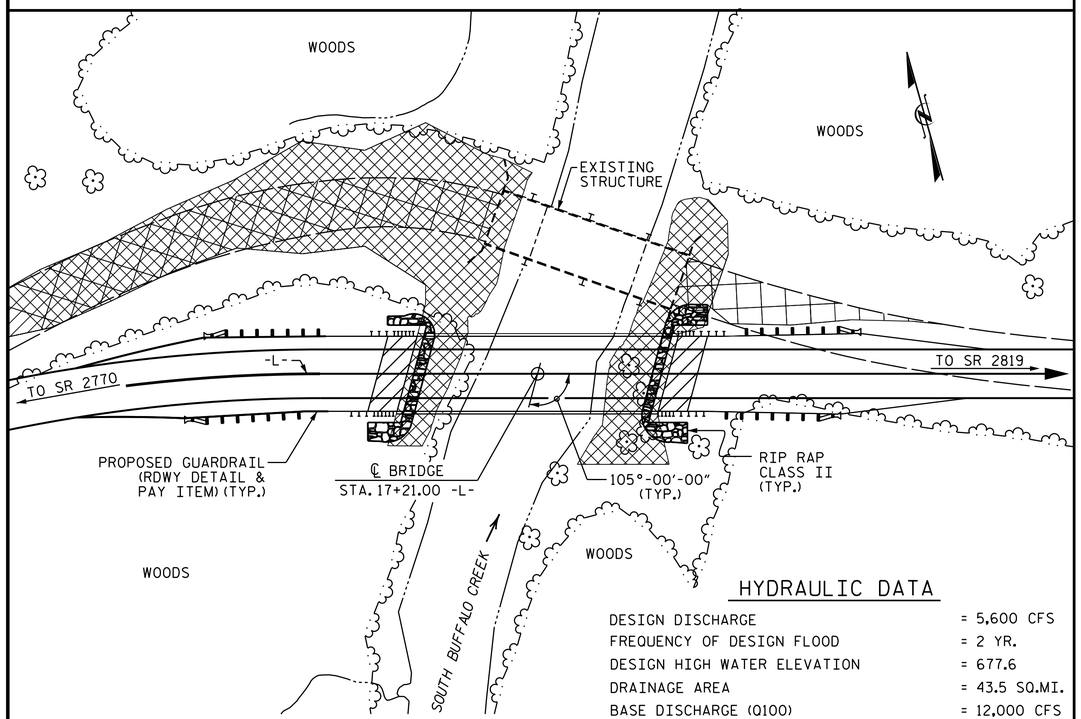


### HYDRAULIC DATA

| | |
|---|---|
| DESIGN DISCHARGE | = 5,600 CFS |
| FREQUENCY OF DESIGN FLOOD | = 2 YR. |
| DESIGN HIGH WATER ELEVATION | = 677.6 |
| DRAINAGE AREA | = 43.5 SQ.MI. |
| BASE DISCHARGE (Q100) | = 12,000 CFS |
| BASE HIGH WATER ELEVATION | = 683.47 |

### OVERTOPPING FLOOD DATA

| | |
|---|---|
| OVERTOPPING DISCHARGE | = 5,700 CFS |
| FREQUENCY OF OVERTOPPING FLOOD | = 2 YR. ± |
| OVERTOPPING FLOOD ELEVATION | = 678.76 |

FOR UTILITY INFORMATION, SEE UTILITY PLANS AND SPECIAL PROVISIONS.

## LOCATION SKETCH

## NOTES:

ASSUMED LIVE LOAD = HL-93 OR ALTERNATE LOADING.

THIS BRIDGE HAS BEEN DESIGNED IN ACCORDANCE WITH THE AASHTO LRFD BRIDGE DESIGN SPECIFICATIONS.

THIS BRIDGE IS LOCATED IN SEISMIC ZONE 1.

FOR OTHER DESIGN DATA AND GENERAL NOTES, SEE SHEET SN.

FOR EROSION CONTROL MEASURES SEE EROSION CONTROL PLANS.

THIS STRUCTURE HAS BEEN DESIGNED IN ACCORDANCE WITH "HEC 18 - EVALUATING SCOUR AT BRIDGES".

THE CONTRACTOR SHALL PROVIDE INDEPENDENT ASSURANCE SAMPLES OF REINFORCING STEEL AS FOLLOWS: FOR PROJECTS REQUIRING UP TO 400 TONS OF REINFORCING STEEL, ONE 30 INCH SAMPLE OF EACH SIZE BAR USED, AND FOR PROJECTS REQUIRING OVER 400 TONS OF REINFORCING STEEL, TWO 30 INCH SAMPLES OF EACH SIZE BAR USED. THE BARS FROM WHICH THE SAMPLES ARE TAKEN MUST THEN BE SPLICED WITH REPLACEMENT BARS OF THE SIZE AND LENGTH OF THE SAMPLE, PLUS A MINIMUM LAP SPLICE OF THIRTY BAR DIAMETERS. PAYMENT FOR THE SAMPLES OF REINFORCING STEEL SHOULD BE CONSIDERED INCIDENTAL TO VARIOUS PAY ITEMS.

IN AS MUCH AS THE PAINT SYSTEM ON THE EXISTING STRUCTURAL STEEL CONTAINS LEAD, THE CONTRACTOR'S ATTENTION IS DIRECTED TO ARTICLE 107-1 OF THE STANDARD SPECIFICATIONS. ANY COSTS RESULTING FROM COMPLIANCE WITH APPLICABLE STATE OR FEDERAL REGULATIONS PERTAINING TO HANDLING OF MATERIALS CONTAINING LEAD BASED PAINT SHALL BE INCLUDED IN THE BID PRICE FOR "REMOVAL OF EXISTING STRUCTURE AT STATION 17+21.00 -L-".

AFTER SERVING AS A TEMPORARY STRUCTURE, THE EXISTING STRUCTURE CONSISTING OF 3 SPANS: 1 @ 20'-4", 1 @ 42'-10", 1 @ 19'-6", WITH A CLEAR ROADWAY WIDTH OF 23'-0" AND TIMBER DECK ON I-BEAMS AND DOUBLE CHANNELS WITH 2½" AWS; SUBSTRUCTURE ABUTMENTS AND INTERIOR BENTS CONSISTING OF RUBBLE MASONRY AND MASS CONCRETE AND LOCATED AT THE DOWNSTRAM OF PROPOSED STRUCTURE SHALL BE REMOVED. THE EXISTING BRIDGE IS PRESENTLY POSTED BELOW THE LEGAL LOAD LIMIT.

THE SUBSTRUCTURE OF THE EXISTING BRIDGE INDICATED ON THE PLANS IS FROM THE BEST INFORMATION AVAILABLE. SINCE THIS INFORMATION IS SHOWN FOR THE CONVENIENCE OF THE CONTRACTOR, THE CONTRACTOR SHALL HAVE NO CLAIM WHATSOEVER AGAINST THE DEPARTMENT OF TRANSPORTATION FOR ANY DELAYS OR ADDITIONAL COST INCURRED BASED ON DIFFERENCES BETWEEN THE EXISTING BRIDGE SUBSTRUCTURE SHOWN ON THE PLANS AND THE ACTUAL CONDITIONS AT THE PROJECT SITE.

REMOVAL OF THE EXISTING BRIDGE SHALL BE PERFORMED SO AS NOT TO ALLOW DEBRIS TO FALL INTO THE WATER. THE CONTRACTOR SHALL REMOVE THE BRIDGE AND SUBMIT PLANS FOR DEMOLITION IN ACCORDANCE WITH ARTICLE 402-2 OF STANDARD SPECIFICATIONS.

THE MATERIAL SHOWN IN THE CROSS-HATCHED AREA ON SHEET S-1 SHALL BE EXCAVATED FOR A DISTANCE OF 30 FT. LEFT AND RIGHT SIDES OF CENTERLINE ROADWAY AT END BENT 1 AND 20 FT. LEFT SIDE, 35 FT. RIGHT SIDE OF CENTERLINE ROADWAY AT END BENT 2 AS DIRECTED BY THE ENGINEER. THIS WORK WILL BE PAID FOR AT THE CONTRACT LUMP SUM PRICE FOR UNCLASSIFIED STRUCTURE EXCAVATION. SEE SECTION 412 OF THE STANDARD SPECIFICATION.

FOR LIMITS OF TEMPORARY SHORING FOR MAINTENANCE OF TRAFFIC, SEE TRAFFIC CONTROL PLANS. FOR PAY ITEM FOR TEMPORARY SHORING FOR MAINTENANCE OF TRAFFIC, SEE ROADWAY PLANS.

FOR HIGH STRENGTH ANCHOR BOLTS, SEE SPECIAL PROVISIONS.

FOR CRANE SAFETY, SEE SPECIAL PROVISIONS.

FOR FALSEWORK AND FORMWORK, SEE SPECIAL PROVISIONS.

FOR GROUT FOR STRUCTURES, SEE SPECIAL PROVISIONS.

FOR SUBMITTAL OF WORKING DRAWINGS, SEE SPECIAL PROVISIONS.

ASPHALT WEARING SURFACE IS INCLUDED IN ROADWAY QUANTITY ON ROADWAY PLANS.

ASBESTOS ASSESSMENT FOR BRIDGE DEMOLITION AND RENOVATION ACTIVITIES, SEE SPECIAL PROVISIONS.

NORTH CAROLINA PROFESSIONAL SEAL 16301 ENGINEER TING HSUNG FANG

DocuSigned by: Ting Fang E72088400977435... 3/22/2016

DOCUMENT NOT CONSIDERED FINAL UNLESS ALL SIGNATURES COMPLETED

PROJECT NO. B-5344
GUILFORD COUNTY
STATION: 17+21.00 -L-

SHEET 3 OF 3

STATE OF NORTH CAROLINA
DEPARTMENT OF TRANSPORTATION
RALEIGH

GENERAL DRAWING
FOR BRIDGE OVER SOUTH BUFFALO CREEK ON SR 2821 BETWEEN SR 2770 & SR 2819

| REVISIONS | | | | | | SHEET NO. |
|---|---|---|---|---|---|---|
| NO. | BY: | DATE: | NO. | BY: | DATE: | S-3 |
| 1 | | | 3 | | | TOTAL SHEETS |
| 2 | | | 4 | | | 16 |

DRAWN BY : H. B. DESAI DATE : 5-21-15
CHECKED BY : D.J. POZOS DATE : 8-03-15

22-MAR-2016 11:56
K:\TIPProjects-B\B5344\Structures\Plans\FinalPlans\b5344_sd_bb.dgn
ttfang

# LOAD AND RESISTANCE FACTOR RATING (LRFD) SUMMARY FOR PRESTRESSED CONCRETE BOX BEAMS

| LEVEL | | VEHICLE | WEIGHT (W) (TONS) | CONTROLLING LOAD RATING | MINIMUM RATING FACTORS (RF) | TONS = W X RF | STRENGTH I LIMIT STATE | | | | | | | | | | | SERVICE III LIMIT STATE | | | | | | COMMENT NUMBER |
|---|---|---|---|---|---|---|---|---|---|---|---|---|---|---|---|---|---|---|---|---|---|---|---|---|
| | | | | | | | LIVELOAD FACTORS | MOMENT | | | | | SHEAR | | | | | LIVELOAD FACTORS | MOMENT | | | | | |
| | | | | | | | | DISTRIBUTION FACTORS (DF) | RATING FACTOR | SPAN | GIRDER LOCATION | DISTANCE FROM LEFT END OF SPAN (ft) | DISTRIBUTION FACTORS (DF) | RATING FACTOR | SPAN | GIRDER LOCATION | DISTANCE FROM LEFT END OF SPAN (ft) | | DISTRIBUTION FACTORS (DF) | RATING FACTOR | SPAN | GIRDER LOCATION | DISTANCE FROM LEFT END OF SPAN (ft) | |
| DESIGN LOAD RATING | | HL-93(Inv) | N/A | 1 | 1.06 | -- | 1.75 | 0.263 | **1.06** | A | EL | **50.559** | 0.574 | 1.19 | A | EL | 10.112 | 0.80 | 0.263 | 1.10 | A | EL | 50.559 | |
| | | HL-93(Opr) | N/A | -- | 1.37 | -- | 1.35 | 0.263 | 1.37 | A | EL | 50.559 | 0.574 | 1.55 | A | EL | 10.112 | N/A | -- | -- | -- | -- | -- | |
| | | HS-20(Inv) | 36.000 | 2 | 1.48 | 53.393 | 1.75 | 0.263 | **1.48** | A | EL | **50.559** | 0.574 | 1.59 | A | EL | 10.112 | 0.80 | 0.263 | 1.54 | A | EL | 50.559 | |
| | | HS-20(Opr) | 36.000 | -- | 1.92 | 69.213 | 1.35 | 0.263 | 1.92 | A | EL | 50.559 | 0.574 | 2.06 | A | EL | 10.112 | N/A | -- | -- | -- | -- | -- | |
| LEGAL LOAD RATING | SV | SNSH | 13.500 | -- | 3.66 | 49.363 | 1.4 | 0.263 | 4.41 | A | EL | 50.559 | 0.574 | 4.90 | A | EL | 10.112 | 0.80 | 0.263 | 3.66 | A | EL | 50.559 | |
| | | SNGARBS2 | 20.000 | -- | 2.64 | 52.871 | 1.4 | 0.263 | 3.19 | A | EL | 50.559 | 0.574 | 3.43 | A | EL | 10.112 | 0.80 | 0.263 | 2.64 | A | EL | 50.559 | |
| | | SNAGRIS2 | 22.000 | -- | 2.47 | 54.358 | 1.4 | 0.263 | 2.98 | A | EL | 50.559 | 0.574 | 3.17 | A | EL | 10.112 | 0.80 | 0.263 | 2.47 | A | EL | 50.559 | |
| | | SNCOTTS3 | 27.250 | -- | 1.82 | 49.519 | 1.4 | 0.263 | 2.19 | A | EL | 50.559 | 0.574 | 2.44 | A | EL | 10.112 | 0.80 | 0.263 | 1.82 | A | EL | 50.559 | |
| | | SNAGGRS4 | 34.925 | -- | 1.49 | 51.941 | 1.4 | 0.263 | 1.79 | A | EL | 50.559 | 0.574 | 1.99 | A | EL | 10.112 | 0.80 | 0.263 | 1.49 | A | EL | 50.559 | |
| | | SNS5A | 35.550 | -- | 1.46 | 51.777 | 1.4 | 0.263 | 1.76 | A | EL | 50.559 | 0.574 | 2.00 | A | EL | 10.112 | 0.80 | 0.263 | 1.46 | A | EL | 50.559 | |
| | | SNS6A | 39.950 | -- | 1.32 | 52.875 | 1.4 | 0.263 | 1.60 | A | EL | 50.559 | 0.574 | 1.81 | A | EL | 10.112 | 0.80 | 0.263 | 1.32 | A | EL | 50.559 | |
| | | SNS7B | 42.000 | -- | 1.26 | 52.917 | 1.4 | 0.263 | 1.52 | A | EL | 50.559 | 0.574 | 1.76 | A | EL | 10.112 | 0.80 | 0.263 | 1.26 | A | EL | 50.559 | |
| | TTST | TNAGRIT3 | 33.000 | -- | 1.61 | 53.138 | 1.4 | 0.263 | 1.94 | A | EL | 50.559 | 0.574 | 2.16 | A | EL | 10.112 | 0.80 | 0.263 | 1.61 | A | EL | 50.559 | |
| | | TNT4A | 33.075 | -- | 1.61 | 53.380 | 1.4 | 0.263 | 1.95 | A | EL | 50.559 | 0.574 | 2.12 | A | EL | 10.112 | 0.80 | 0.263 | 1.61 | A | EL | 50.559 | |
| | | TNT6A | 41.600 | -- | 1.31 | 54.400 | 1.4 | 0.263 | 1.58 | A | EL | 50.559 | 0.574 | 1.84 | A | EL | 10.112 | 0.80 | 0.263 | 1.31 | A | EL | 50.559 | |
| | | TNT7A | 42.000 | -- | 1.31 | 54.934 | 1.4 | 0.263 | 1.58 | A | EL | 50.559 | 0.574 | 1.81 | A | EL | 10.112 | 0.80 | 0.263 | 1.31 | A | EL | 50.559 | |
| | | TNT7B | 42.000 | -- | 1.34 | 56.192 | 1.4 | 0.263 | 1.61 | A | EL | 50.559 | 0.574 | 1.73 | A | EL | 10.112 | 0.80 | 0.263 | 1.34 | A | EL | 50.559 | |
| | | TNAGRIT4 | 43.000 | -- | 1.28 | 55.213 | 1.4 | 0.263 | 1.55 | A | EL | 50.559 | 0.574 | 1.68 | A | EL | 10.112 | 0.80 | 0.263 | 1.28 | A | EL | 50.559 | |
| | | TNAGT5A | 45.000 | -- | 1.22 | 54.721 | 1.4 | 0.263 | 1.47 | A | EL | 50.559 | 0.574 | 1.65 | A | EL | 10.112 | 0.80 | 0.263 | 1.22 | A | EL | 50.559 | |
| | | TNAGT5B | 45.000 | 3 | 1.21 | 54.275 | 1.4 | 0.263 | 1.45 | A | EL | 50.559 | 0.574 | 1.60 | A | EL | 10.112 | 0.80 | 0.263 | **1.21** | A | EL | **50.559** | |

## LOAD FACTORS:

| DESIGN LOAD RATING FACTORS | LIMIT STATE | $\gamma_{DC}$ | $\gamma_{DW}$ |
|---|---|---|---|
| | STRENGTH I | 1.25 | 1.50 |
| | SERVICE III | 1.00 | 1.00 |

## NOTES:

MINIMUM RATING FACTORS ARE BASED ON THE STRENGTH I AND SERVICE III LIMIT STATES.

ALLOWABLE STRESSES FOR SERVICE III LIMIT STATE ARE AS REQUIRED FOR DESIGN.

## COMMENTS:

1.
2.
3.
4.

| # CONTROLLING LOAD RATING |
|---|
| 1 DESIGN LOAD RATING (HL-93) |
| 2 DESIGN LOAD RATING (HS-20) |
| 3 LEGAL LOAD RATING ** |
| ** SEE CHART FOR VEHICLE TYPE |

| GIRDER LOCATION |
|---|
| I - INTERIOR GIRDER |
| EL - EXTERIOR LEFT GIRDER |
| ER - EXTERIOR RIGHT GIRDER |

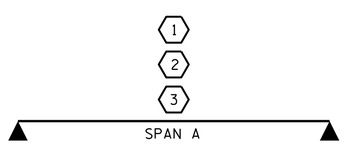


LRFR SUMMARY

PROJECT NO. B-5344
GUILFORD COUNTY
STATION: 17+21.00 -L-

STATE OF NORTH CAROLINA
DEPARTMENT OF TRANSPORTATION
RALEIGH

STANDARD
LRFR SUMMARY FOR 105' BOX BEAM UNIT 105° SKEW
(NON-INTERSTATE TRAFFIC)

NORTH CAROLINA PROFESSIONAL SEAL 26445 ENGINEER P. KOREY NEWTON

DocuSigned by: Ting Fang E72088400977435... 3/22/2016

DOCUMENT NOT CONSIDERED FINAL UNLESS ALL SIGNATURES COMPLETED

| REVISIONS | | | | | | |
|---|---|---|---|---|---|---|
| NO. | BY: | DATE: | NO. | BY: | DATE: | |
| 1 | | | 3 | | | |
| 2 | | | 4 | | | |

SHEET NO. S-4
TOTAL SHEETS 16

DESIGN ENGINEER OF RECORD: P.K. NEWTON DATE : 2/2/16
ASSEMBLED BY : P.K. NEWTON DATE : 2/2/16
CHECKED BY : T.H. FANG DATE : 2/2/16
DRAWN BY : TMG 11/11
CHECKED BY : AAC 11/11

22-MAR-2016 11:56
K:\TIPProjects-B\B5344\Structures\Plans\FinalPlans\b5344_sd_bb.dgn
tfang

STD. NO. LRFR1

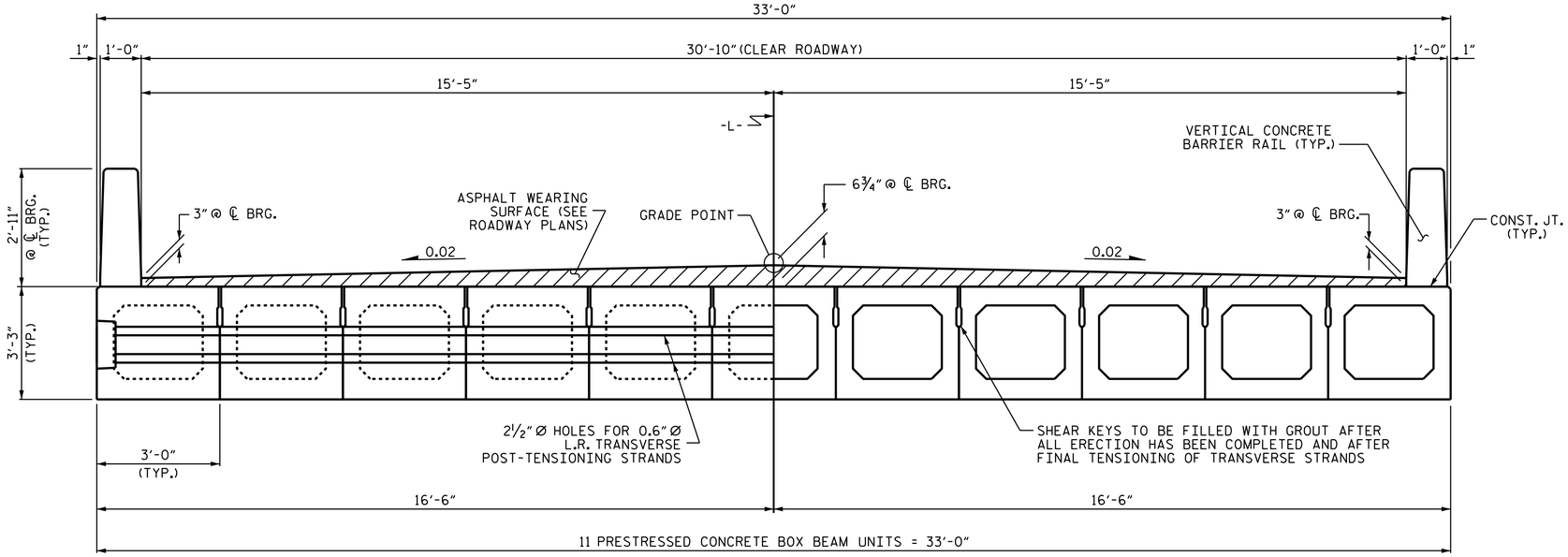


HALF SECTION
AT INTERMEDIATE DIAPHRAGMS

HALF SECTION
THROUGH VOIDS

## TYPICAL SECTION

* THE MAXIMUM BARRIER RAIL HEIGHT AND ASPHALT THICKNESS IS SHOWN. THE HEIGHT OF THE BARRIER RAIL AND ASPHALT THICKNESS VARIES WHILE THE TOP OF THE BARRIER RAIL FOLLOWS THE PROFILE OF THE GUTTERLINE. FOR RAIL HEIGHT DETAILS AND ASPHALT THICKNESS, SEE THE "VERTICAL CONCRETE BARRIER RAIL SECTION" DETAIL.

FIXED END

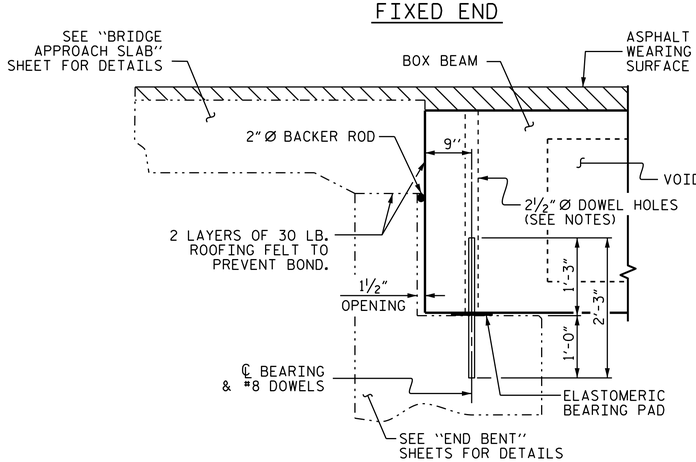


## SECTION AT END BENT

SHOWING DOWELS ON BOX BEAM.

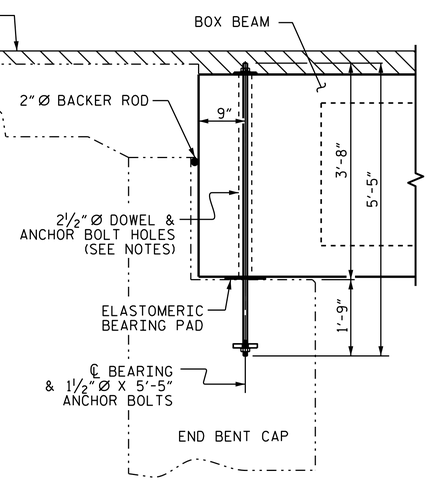


## HOLD-DOWN ANCHOR BOLT

ANCHOR BOLT SHALL BE LOCATED AT OUTSIDE OF EXTERIOR BOX BEAM AT BEARINGS.

FOR 1 ½" Ø X 5'-5" ANCHOR BOLTS DETAILS, SEE SHEET S-9.

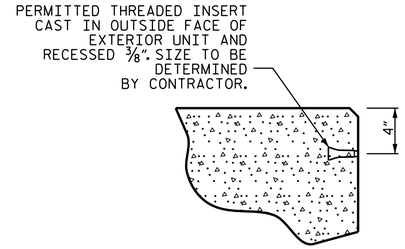


## THREADED INSERT DETAIL

THE PERMITTED THREADED INSERTS ARE DETAILED AS AN OPTION FOR THE CONTRACTOR TO ATTACH FALSEWORK AND FORMWORK DURING CONSTRUCTION.

THE PERMITTED THREADED INSERTS IN THE EXTERIOR UNITS SHALL BE SIZED BY THE CONTRACTOR, SPACED AT 4'-0" CENTERS AND GALVANIZED IN ACCORDANCE WITH SECTION 1076 OF THE STANDARD SPECIFICATIONS. STAINLESS STEEL THREADED INSERTS MAY BE USED AS AN ALTERNATE.

THE PERMITTED THREADED INSERTS SHALL BE GROUTED BY THE CONTRACTOR IMMEDIATELY FOLLOWING REMOVAL OF THE FALSEWORK.

THE COST OF THE PERMITTED THREADED INSERTS SHALL BE INCLUDED IN THE PRICE BID FOR THE PRECAST UNITS.

## NOTES

ALL PRESTRESSING STRANDS SHALL BE 7-WIRE LOW RELAXATION GRADE 270 STRANDS AND SHALL CONFORM TO AASHTO M203 EXCEPT FOR SAMPLING REQUIREMENTS WHICH SHALL BE IN ACCORDANCE WITH THE STANDARD SPECIFICATIONS.

ALL REINFORCING STEEL CAST WITH THE BOX BEAM SECTIONS SHALL BE GRADE 60 AND SHALL BE INCLUDED IN THE UNIT PRICE BID FOR PRESTRESSED CONCRETE BOX BEAMS.

RECESSES FOR TRANSVERSE STRANDS SHALL BE GROUTED AFTER THE TENSIONING OF THE STRANDS.

THE 2½" Ø DOWEL HOLES AT FIXED ENDS OF BOX BEAM SECTIONS SHALL BE FILLED WITH NON-SHRINK GROUT.

THE BACKER ROD SHALL CONFORM TO THE REQUIREMENTS OF TYPE M BOND BREAKER. SEE SECTION 1028 OF THE STANDARD SPECIFICATIONS.

THE TRANSFER OF LOAD FROM THE ANCHORAGES TO THE BOX BEAM UNIT SHALL BE DONE WHEN THE CONCRETE HAS REACHED A COMPRESSIVE STRENGTH OF NOT LESS THAN 5400 PSI.

ALL REINFORCING STEEL IN VERTICAL CONCRETE BARRIER RAILS SHALL BE EPOXY COATED.

PRESTRESSING STRANDS SHALL BE CUT FLUSH WITH THE BOX BEAM UNIT ENDS.

APPLY EPOXY PROTECTIVE COATING TO BOX BEAM UNIT ENDS.

VERTICAL GROOVED CONTRACTION JOINTS, ½" IN DEPTH, SHALL BE TOOLED IN ALL EXPOSED FACES OF THE BARRIER RAIL AND IN ACCORDANCE WITH ARTICLE 825-10(B) OF THE STANDARD SPECIFICATIONS. A VERTICAL CONTRACTION JOINT SHALL BE LOCATED AT EACH THIRD POINT BETWEEN BARRIER RAIL EXPANSION JOINTS. ONLY ONE CONTRACTION JOINT IS REQUIRED AT MIDPOINT OF BARRIER RAIL SEGMENTS LESS THAN 20 FEET IN LENGTH AND NO CONTRACTION JOINTS ARE REQUIRED FOR THOSE SEGMENTS LESS THAN 10 FEET IN LENGTH.

THE LOCATION OF THE VOID DRAINS MAY BE SHIFTED SLIGHTLY WHERE NECESSARY TO CLEAR PRESTRESSING STRANDS OR TRANSVERSE REINFORCING STEEL.

FOR GROUT FOR STRUCTURES, SEE SPECIAL PROVISIONS.

EXTERIOR BOX BEAMS SHALL BE ANCHORED AT THE OUTSIDE FACE OF UNIT AT BOTH END BENTS WITH 1½" ANCHOR BOLTS. FOR HIGH STRENGTH ANCHOR BOLTS, SEE SPECIAL PROVISIONS.

ANCHOR BOLTS, HOLD DOWN PLATES, NUTS, AND WASHERS SHALL BE IN ACCORDANCE WITH MANUFACTURER'S RECOMMENDATIONS.

ANCHOR BOLTS SHALL BE TIGHTENED FINGER TIGHT AND THEN BACKED OFF ½ TURN. THE THREAD OF THE NUT AND BOLT SHALL THEM BE BURNED WITH A SHARP POINTED TOOL.

HOLD DOWN PLATES, NUTS, AND WASHERS SHALL BE GALVANIZED IN ACCORDANCE WITH THE STANDARD SPECIFICATIONS.

HOLD DOWN PLATES, NUTS, AND WASHERS SHALL BE INCLUDED IN THE PAY ITEM FOR PRESTRESSED BOX BEAM.

PROJECT NO. B-5344
GUILFORD COUNTY
STATION: 17+21.00 -L-

SHEET 1 OF 5

STATE OF NORTH CAROLINA
DEPARTMENT OF TRANSPORTATION
RALEIGH

STANDARD

3'-0" X 3'-3"
PRESTRESSED CONCRETE
BOX BEAM UNIT

NORTH CAROLINA PROFESSIONAL SEAL 16301 ENGINEER TING HSIUNG FANG

DocuSigned by: Ting Fang E72088400077435... 3/22/2016

DOCUMENT NOT CONSIDERED FINAL UNLESS ALL SIGNATURES COMPLETED

| REVISIONS | | | | | | |
|---|---|---|---|---|---|---|
| NO. | BY: | DATE: | NO. | BY: | DATE: | |
| 1 | | | 3 | | | |
| 2 | | | 4 | | | |

SHEET NO. S-5
TOTAL SHEETS 16

| | |
|---|---|
| ASSEMBLED BY : H. B. DESAI | DATE : 5-22-15 |
| CHECKED BY : D.J. POZOS | DATE : 8-03-15 |
| DRAWN BY : DGE 8/11 | |
| CHECKED BY : TMG 11/11 | |

22-MAR-2016 11:56
K:\TIPProjects-B\B5344\Structures\Plans\FinalPlans\b5344_sd_bb.dgn
ttfang

STD. NO. 39PCBB1_30

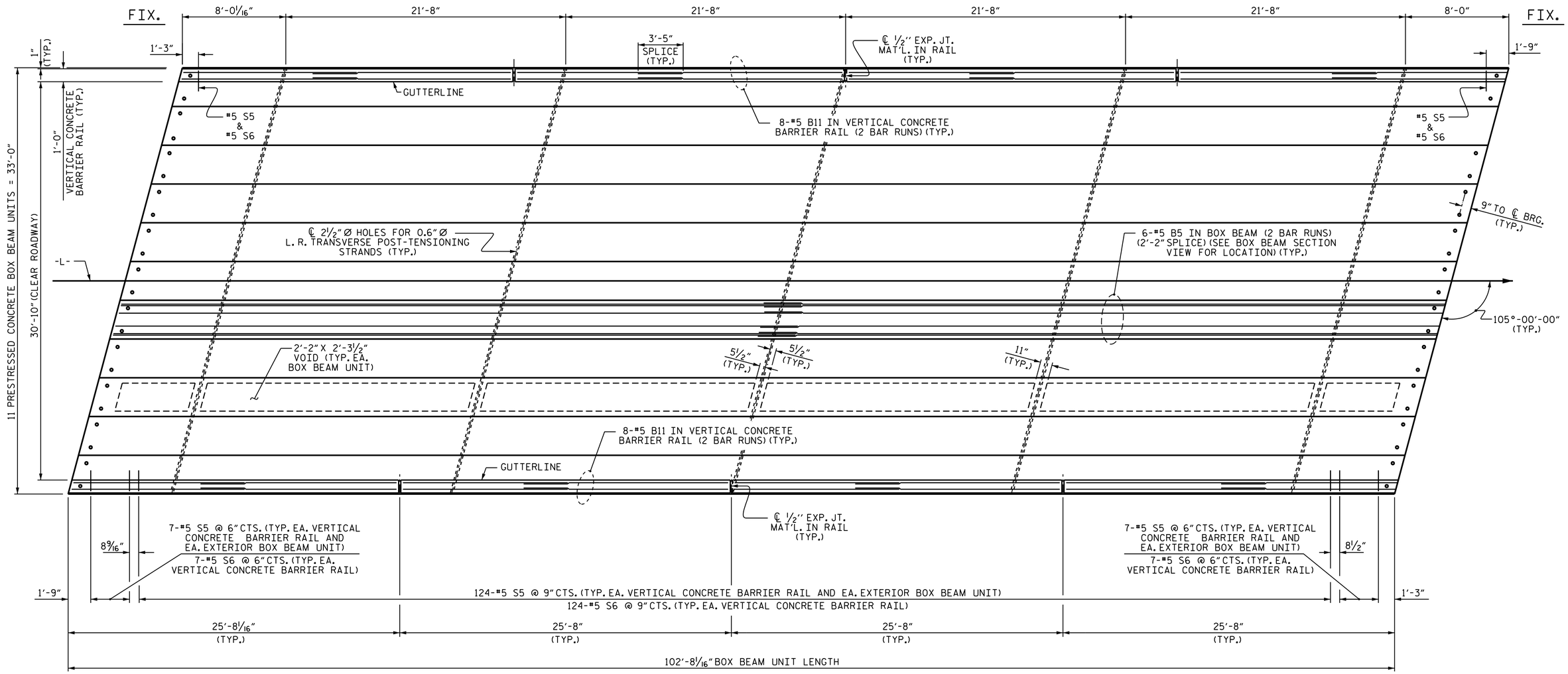


## PLAN OF SPAN A

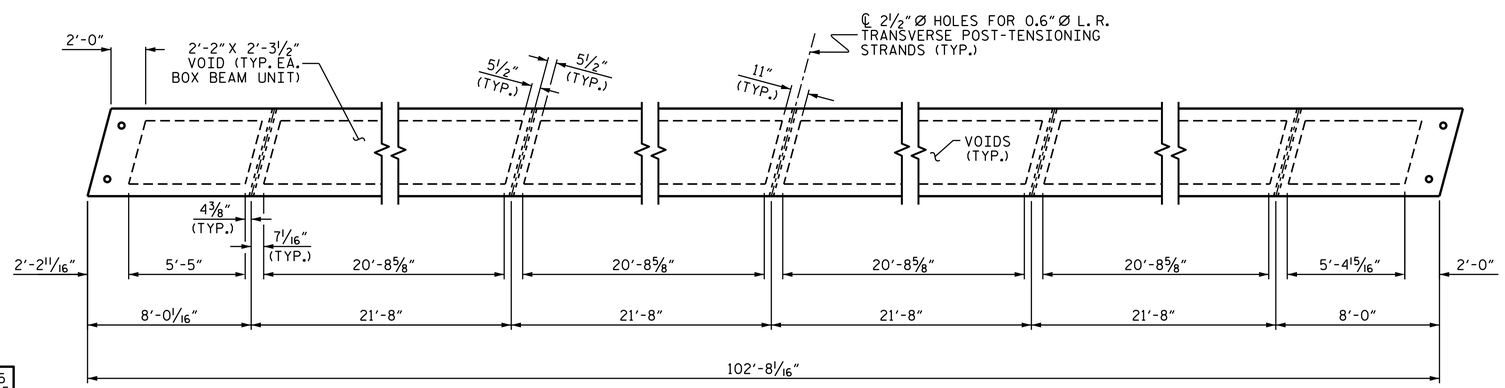


## DIAPHRAGM AND VOID LAYOUT

PROJECT NO. B-5344

GUILFORD COUNTY

STATION: 17+21.00 -L-

SHEET 2 OF 5

STATE OF NORTH CAROLINA
DEPARTMENT OF TRANSPORTATION
RALEIGH
SUPERSTRUCTURE

# PLAN OF SPAN A

105° SKEW

NORTH CAROLINA PROFESSIONAL SEAL 16301 ENGINEER TING HSIUNG FANG

DocuSigned by: Ting Fang E72088400977430... 3/22/2016

DOCUMENT NOT CONSIDERED FINAL UNLESS ALL SIGNATURES COMPLETED

| REVISIONS | | | | | | |
|---|---|---|---|---|---|---|
| NO. | BY: | DATE: | NO. | BY: | DATE: | SHEET NO. S-6 |
| 1 | | | 3 | | | TOTAL SHEETS 16 |
| 2 | | | 4 | | | |

ASSEMBLED BY : H. B. DESAI DATE : 05-15-15
CHECKED BY : D.J. POZOS DATE : 08-03-15

DRAWN BY : DGE 8/11
CHECKED BY : TMG 11/11

22-MAR-2016 11:56
K:\TIPProjects-B\B5344\Structures\Plans\FinalPlans\b5344_sd_bb.dgn
ttfang

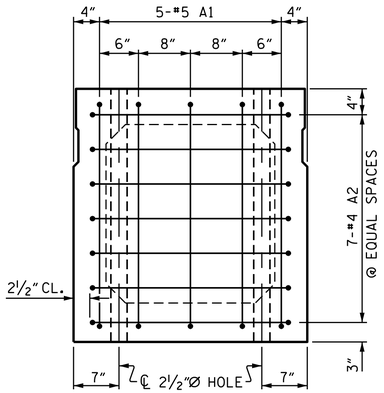


## END ELEVATION

SHOWING PLACEMENT OF #5 & #4 "A" BARS AND LOCATION OF DOWEL HOLES. (INTERIOR BOX BEAM SECTION SHOWN-EXTERIOR SECTION SIMILAR EXCEPT SHEAR KEY LOCATION. STRAND LAYOUT NOT SHOWN.)

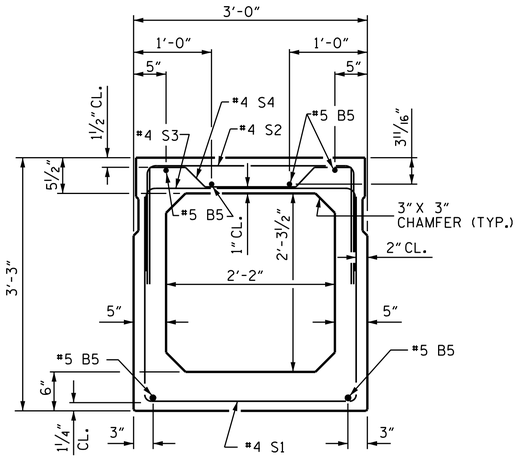


## INTERIOR BOX BEAM SECTION

(STRAND LAYOUT NOT SHOWN)

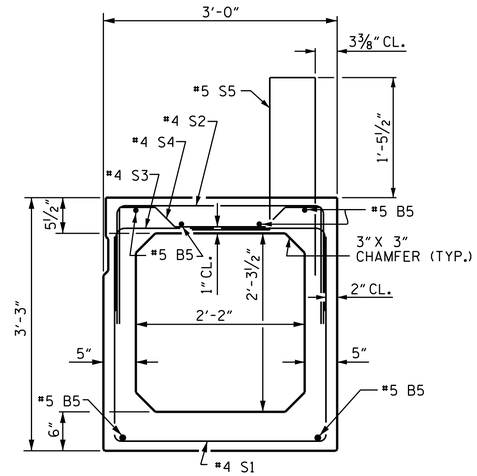


## EXTERIOR BOX BEAM SECTION

(STRAND LAYOUT NOT SHOWN)

## 0.6"Ø LOW RELAXATION STRAND LAYOUT

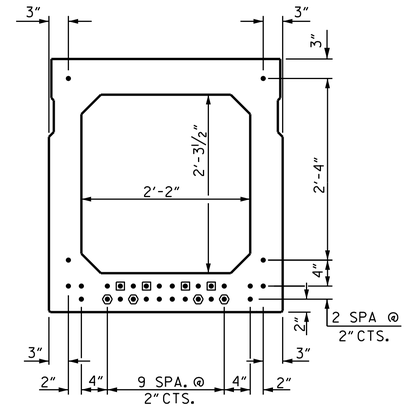


## TYPICAL STRAND LOCATION

(30 STRANDS REQUIRED)

## DEBONDING LEGEND

- ● FULLY BONDED STRANDS
- ◉ STRANDS DEBONDED FOR 6'-0" FROM END OF BOX BEAM
- ⬢ STRANDS DEBONDED FOR 12'-0" FROM END OF BOX BEAM

BOND SHALL BE BROKEN ON STRANDS AS SHOWN FOR THE SPECIFIED LENGTH FROM EACH END OF THE BOX BEAM. SEE STANDARD SPECIFICATIONS ARTICLE 1078-7.

## BAR TYPES

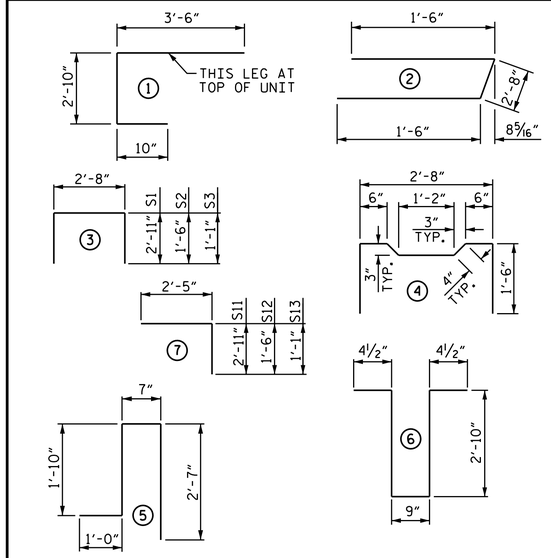


ALL BAR DIMENSIONS ARE OUT TO OUT

## BILL OF MATERIAL FOR ONE BOX BEAM SECTION

| | | | | EXTERIOR UNIT | | INTERIOR UNIT | |
|---|---|---|---|---|---|---|---|
| BAR | NUMBER | SIZE | TYPE | LENGTH | WEIGHT | LENGTH | WEIGHT |
| A1 | 10 | #5 | 1 | 7'-2" | 75 | 7'-2" | 75 |
| A2 | 44 | #4 | 2 | 5'-8" | 167 | 5'-8" | 167 |
| B5 | 12 | #5 | STR | 53'-3" | 654 | 53'-3" | 654 |
| K1 | 15 | #4 | 6 | 7'-2" | 72 | 7'-2" | 72 |
| K2 | 10 | #4 | STR | 2'-7" | 17 | 2'-7" | 17 |
| S1 | 81 | #4 | 3 | 8'-6" | 460 | 8'-6" | 460 |
| S2 | 81 | #4 | 3 | 5'-8" | 307 | 5'-8" | 307 |
| S3 | 141 | #4 | 3 | 4'-10" | 455 | 4'-10" | 455 |
| S4 | 60 | #4 | 4 | 5'-10" | 234 | 5'-10" | 234 |
| S11 | 12 | #4 | 7 | 5'-4" | 43 | 5'-4" | 43 |
| S12 | 12 | #4 | 7 | 3'-11" | 31 | 3'-11" | 31 |
| S13 | 12 | #4 | 7 | 3'-6" | 28 | 3'-6" | 28 |
| ✱ S5 | 138 | #5 | 5 | 6'-0" | 864 | -- | -- |
| REINFORCING STEEL | | | | 2543 | LBS. | 2543 | LBS. |
| ✱ EPOXY COATED REINF. STEEL | | | | 864 | LBS. | | |
| 6500 P.S.I. CONCRETE | | | | 20.0 | CU. YDS. | 19.8 | CU. YDS. |
| 0.6"Ø L.R. STRANDS | | | | No. 30 | | No. 30 | |

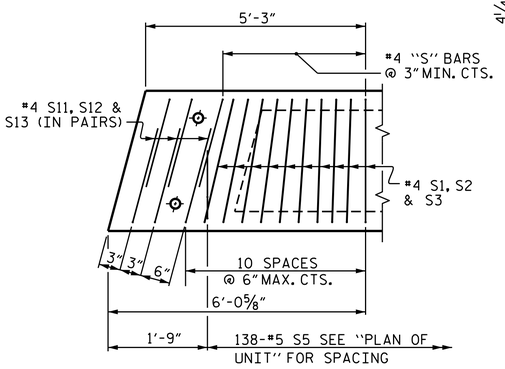


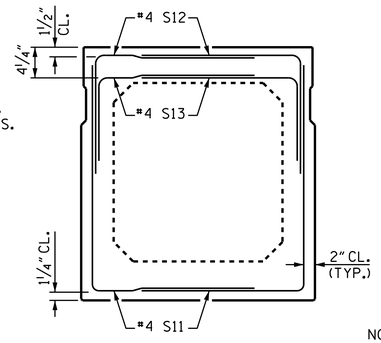


## END VIEW

(SHOWING #4 "S" BARS IN END OF BEAM)

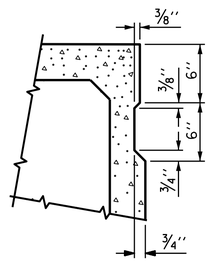


## SHEAR KEY DETAIL

NOTE: OMIT SHEAR KEY ON OUTSIDE FACE OF EXTERIOR BOX BEAMS.

## GRADE 270 STRANDS

| | 0.6"Ø L.R. |
|---|---|
| AREA (SQUARE INCHES) | 0.217 |
| ULTIMATE STRENGTH (LBS. PER STRAND) | 58,600 |
| APPLIED PRESTRESS (LBS. PER STRAND) | 43,950 |

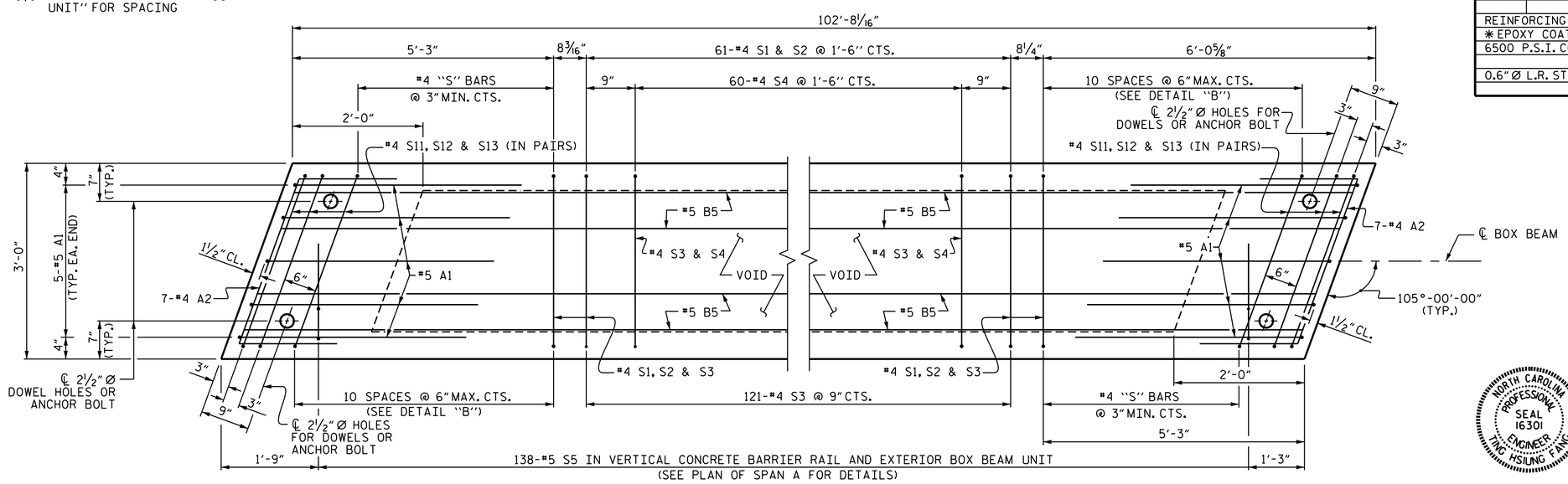


## PLAN OF BOX BEAM

EXTERIOR UNIT SHOWN, INTERIOR UNIT SIMILAR EXCEPT OMIT #5 S5 BARS.
FOR LOCATION OF DIAPHRAGMS, SEE PLAN OF UNIT.
FOR REINFORCING STEEL IN DIAPHRAGMS, SEE DIAPHRAGM DETAILS.

PROJECT NO. B-5344
GUILFORD COUNTY
STATION: 17+21.00 -L-

SHEET 3 OF 5

STATE OF NORTH CAROLINA
DEPARTMENT OF TRANSPORTATION
RALEIGH

STANDARD

3'-0" X 3'-3"
PRESTRESSED CONCRETE
BOX BEAM UNIT

NORTH CAROLINA PROFESSIONAL SEAL 16301 ENGINEER TING HSIUNG FANG

DocuSigned by: Ting Fang
E72088400977435...
3/22/2016

DOCUMENT NOT CONSIDERED FINAL UNLESS ALL SIGNATURES COMPLETED

| REVISIONS | | | | | | SHEET NO. |
|---|---|---|---|---|---|---|
| NO. | BY: | DATE: | NO. | BY: | DATE: | S-7 |
| 1 | | | 3 | | | TOTAL SHEETS |
| 2 | | | 4 | | | 16 |

ASSEMBLED BY : H. B. DESAI DATE : 05-18-15
CHECKED BY : D.J. POZOS DATE : 08-03-15
DRAWN BY : DGE 11/11
CHECKED BY : TMG 11/11

08-FEB-2016 15:38
K:\TIPProjects-B\B5344\Structures\Plans\FinalPlans\b5344_sd_bb.dgn
ttang

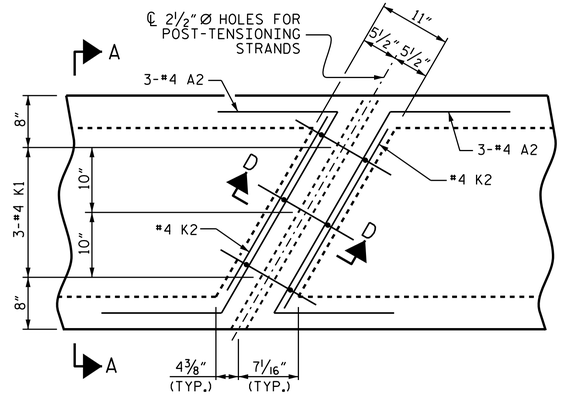


PLAN

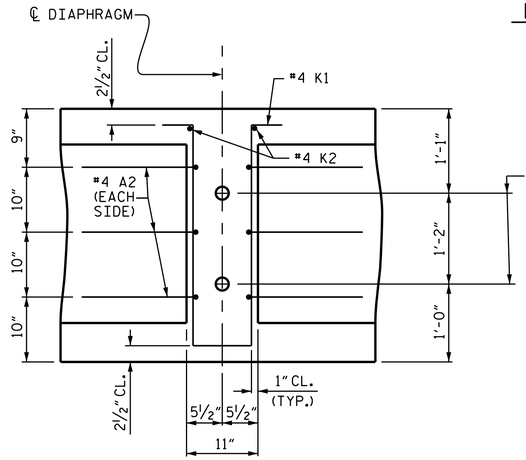


SECTION D-D

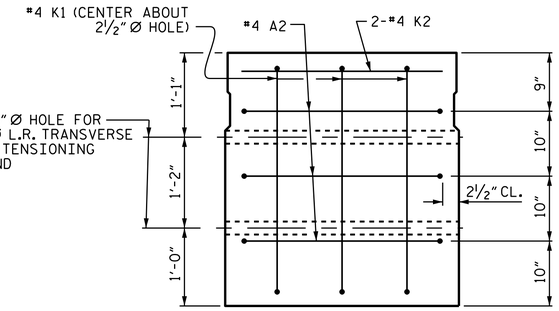


SECTION A-A
VOIDS NOT SHOWN

## DOUBLE DIAPHRAGM DETAILS

#4 "S" BARS NOT SHOWN. #4 "S" BARS MAY BE SHIFTED SLIGHTLY TO CLEAR 2½" Ø HOLES.

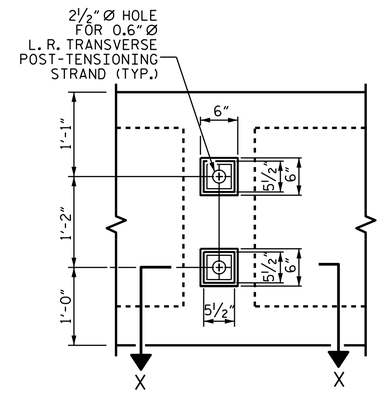


VIEW Y-Y
SHOWING ELEVATION VIEW OF GROUTED RECESS

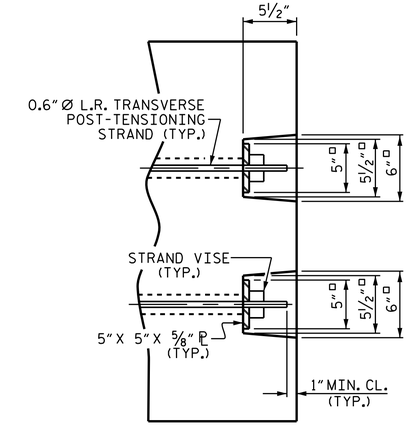


DETAIL "C"

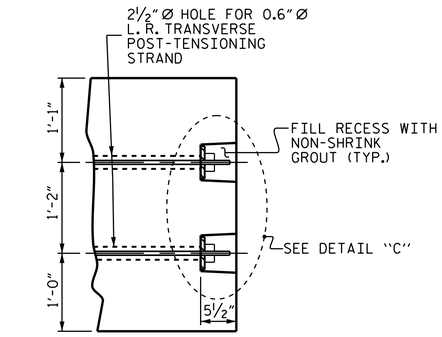


PART SECTION AT RECESS

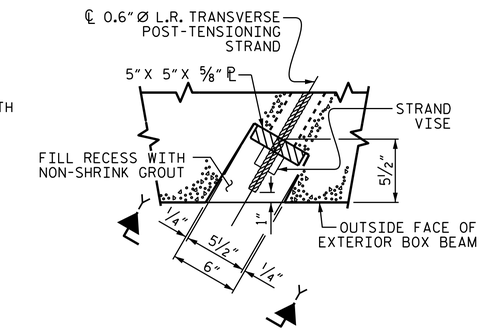


SECTION X-X
SHOWING PLAN VIEW OF GROUTED RECESS

## GROUTED RECESS DETAIL AT END OF POST-TENSIONED STRANDS OF EXTERIOR BOX BEAM

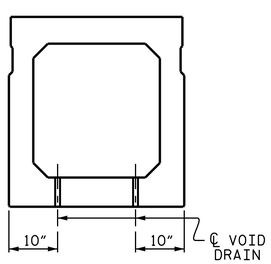


SECTION B-B

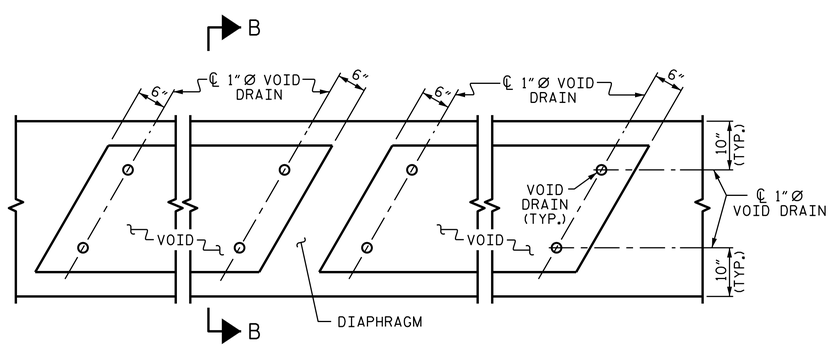


PART PLAN

## VOID DRAIN DETAILS

(DIMENSIONS SHOWN ARE TYPICAL FOR EACH VOID)

| DEAD LOAD DEFLECTION AND CAMBER | |
|---|---|
| | 3'-0" × 3'-3" |
| 102'-8¹⁄₁₆" BOX BEAM UNIT (NC & SE) | 0.6" Ø L.R. STRAND |
| CAMBER (BEAM ALONE IN PLACE) | 2³⁄₁₆" ↑ |
| DEFLECTION DUE TO SUPERIMPOSED DEAD LOAD ** | 1¹⁄₁₆" ↓ |
| FINAL CAMBER | ⅛" ↑ |

** INCLUDES FUTURE WEARING SURFACE

| BOX BEAM UNITS REQUIRED | | | |
|---|---|---|---|
| | NUMBER | LENGTH | TOTAL LENGTH |
| EXTERIOR B.B. | 2 | 102'-8¹⁄₁₆" | 205.344 |
| INTERIOR B.B. | 9 | 102'-8¹⁄₁₆" | 924.047 |
| TOTAL | 11 | ——— | 1129.391 |

PROJECT NO. B-5344
GUILFORD COUNTY
STATION: 17+21.00 -L-

SHEET 4 OF 5

STATE OF NORTH CAROLINA
DEPARTMENT OF TRANSPORTATION
RALEIGH

STANDARD

3'-0" X 3'-3"
PRESTRESSED CONCRETE
BOX BEAM UNIT

NORTH CAROLINA PROFESSIONAL SEAL 16301 ENGINEER TING-HSIUNG FANG

DocuSigned by: Ting Fang
E72088400977438...
3/22/2016

DOCUMENT NOT CONSIDERED FINAL UNLESS ALL SIGNATURES COMPLETED

| REVISIONS | | | | | | |
|---|---|---|---|---|---|---|
| NO. | BY: | DATE: | NO. | BY: | DATE: | |
| 1 | | | 3 | | | |
| 2 | | | 4 | | | |

SHEET NO. S-8
TOTAL SHEETS 16

ASSEMBLED BY : H. B. DESAI DATE : 05-18-15
CHECKED BY : D.J. POZOS DATE : 08-03-15
DRAWN BY : DGE 11/11
CHECKED BY : TMG 11/11

08-FEB-2016 15:38
K:\TIPProjects-B\B5344\Structures\Plans\FinalPlans\b5344_sd_bb.dgn
ttfang

## BILL OF MATERIAL FOR VERTICAL CONCRETE BARRIER RAIL

| BAR | BARS PER PAIR OF EXTERIOR UNITS | SIZE | TYPE | LENGTH | WEIGHT |
|---|---|---|---|---|---|
| | 102'-8 1/16" UNIT | | | | |
| | | | | | |
| ✱ B11 | 128 | #5 | STR | 15'-11" | 2125 |
| | | | | | |
| ✱ S6 | 276 | #5 | 1 | 5'-6" | 1583 |
| | | | | | |
| ✱ EPOXY COATED REINFORCING STEEL | | | LBS. | | 3708 |
| CLASS AA CONCRETE | | | CU.YDS. | | 20.1 |
| TOTAL VERTICAL CONCRETE BARRIER RAIL | | | LIN. FT. | | 205.342 |

## GUTTERLINE ASPHALT THICKNESS & RAIL HEIGHT

| | ASPHALT OVERLAY THICKNESS @ MID-SPAN | RAIL HEIGHT @ MID-SPAN |
|---|---|---|
| 102'-8 1/16" UNITS | 1 5/8" | 2'-9 7/8" |

## BAR TYPE

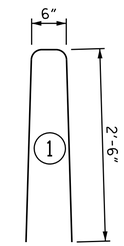


BAR DIMENSIONS ARE OUT TO OUT

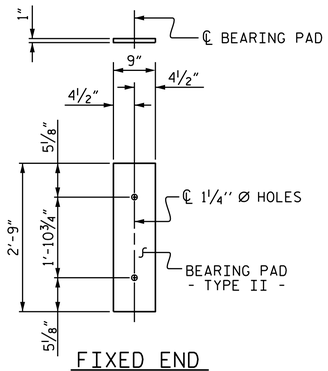


FIXED END

( TYPE II - 22 REQ'D )

## ELASTOMERIC BEARING DETAILS

ELASTOMER IN ALL BEARINGS SHALL BE 60 DUROMETER HARDNESS.

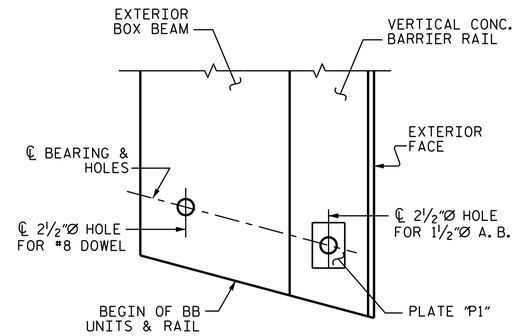


PLAN

SHOWING END BENT 1 RIGHT SIDE,
OTHER LOCATIONS SIMILAR.

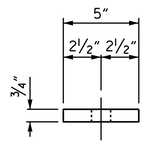


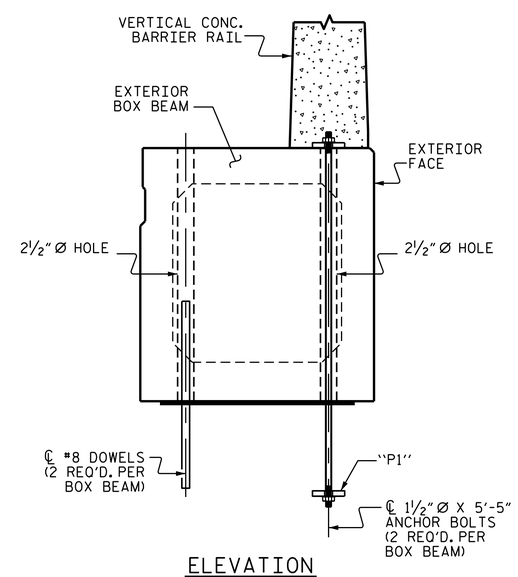


ELEVATION

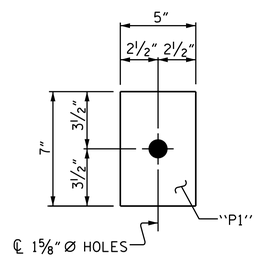


PLATE "P1" DETAILS

(4 REQ'D. PER BOX BEAM)

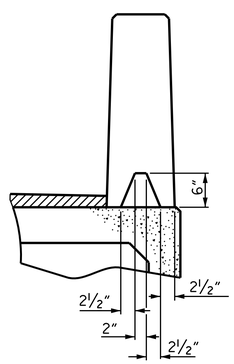


SECTION S-S

AT DAM IN OPEN JOINT
( THIS IS TO BE USED ONLY
WHEN SLIP FORM IS USED )

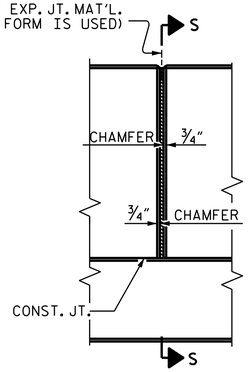


ELEVATION AT EXPANSION JOINTS

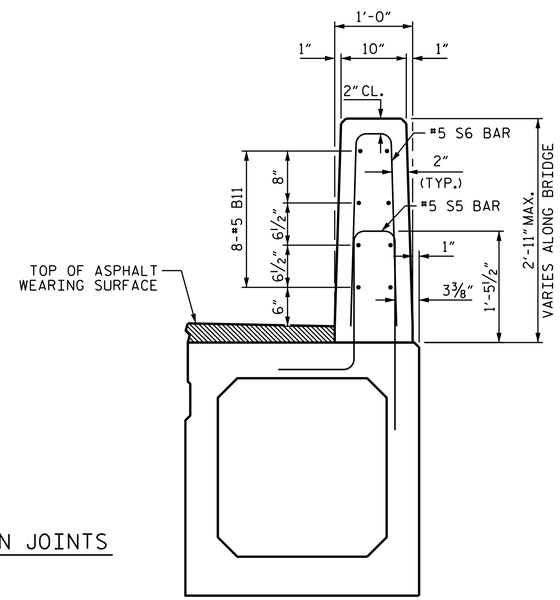


SECTION THRU RAIL

## VERTICAL CONCRETE BARRIER RAIL DETAILS

## ANCHOR BOLT DETAILS

(ON EXTERIOR BOX BEAM ONLY)

NORTH CAROLINA PROFESSIONAL SEAL 16301 ENGINEER TING HSIUNG FANG

DocuSigned by: Ting Fang E72B8400977435...

3/22/2016

PROJECT NO. B-5344

GUILFORD COUNTY

STATION: 17+21.00 -L-

SHEET 5 OF 5

STATE OF NORTH CAROLINA
DEPARTMENT OF TRANSPORTATION
RALEIGH

STANDARD

3'-0" X 3'-3"
PRESTRESSED CONCRETE
BOX BEAM UNIT

| | |
|---|---|
| ASSEMBLED BY : H. B. DESAI | DATE : 5-19-15 |
| CHECKED BY : D.J. POZOS | DATE : 8-03-15 |
| DRAWN BY : DGE 10/11 | |
| CHECKED BY : TMG 11/11 | |

DOCUMENT NOT CONSIDERED FINAL UNLESS ALL SIGNATURES COMPLETED

| REVISIONS | | | | | | SHEET NO. |
|---|---|---|---|---|---|---|
| NO. | BY: | DATE: | NO. | BY: | DATE: | S-9 |
| 1 | | | 3 | | | TOTAL SHEETS |
| 2 | | | 4 | | | 16 |

09-FEB-2016 15:04
K:\TIPProjects-B\B5344\Structures\Plans\FinalPlans\b5344_sd_bb.dgn
ttang

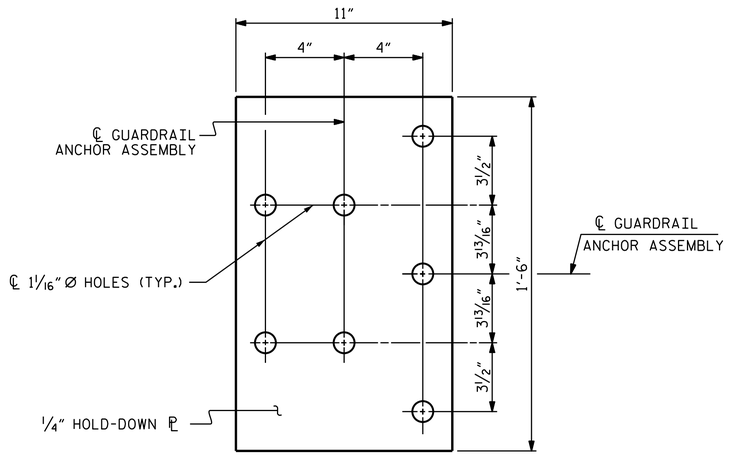


PLAN

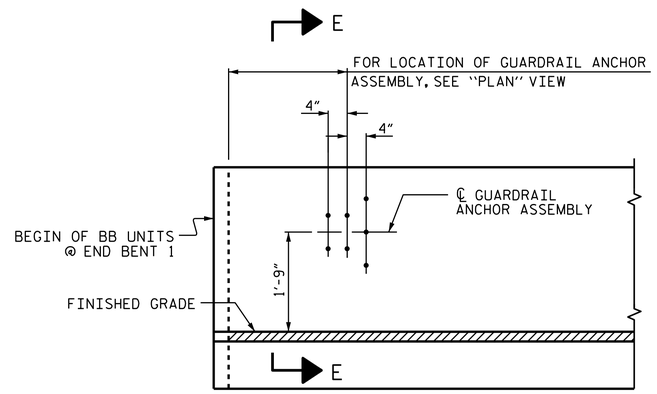


ELEVATION

## NOTES

THE GUARDRAIL ANCHOR ASSEMBLY SHALL CONSIST OF A 1/4" HOLD DOWN PLATE AND 7 - 7/8" Ø BOLTS WITH NUTS AND WASHERS.

THE HOLD-DOWN PLATE SHALL CONFORM TO AASHTO M270 GRADE 36. AFTER FABRICATION, THE HOLD-DOWN PLATE SHALL BE HOT-DIP GALVANIZED IN ACCORDANCE WITH AASHTO M111.

BOLTS SHALL CONFORM TO THE REQUIREMENTS OF ASTM A307 AND NUTS SHALL CONFORM TO THE REQUIREMENTS OF AASHTO M291. BOLTS, NUTS AND WASHERS SHALL BE GALVANIZED. (AT THE CONTRACTOR'S OPTION, STAINLESS STEEL BOLTS, NUTS AND WASHERS MAY BE USED AS AN ALTERNATE FOR THE 7/8" Ø GALVANIZED BOLTS, NUTS AND WASHERS. THEY SHALL CONFORM TO OR EXCEED THE MECHANICAL REQUIREMENTS OF ASTM A307. THE USE OF THIS ALTERNATE SHALL BE APPROVED BY THE ENGINEER.)

THE GUARDRAIL ANCHOR ASSEMBLY IS REQUIRED AT ALL POINTS WHERE APPROACH GUARDRAIL IS TO BE ATTACHED TO THE END OF BARRIER RAIL. FOR POINTS OF ATTACHMENT, SEE SKETCH.

AFTER INSTALLATION, THE EXPOSED THREAD OF THE BOLT SHALL BE BURRED WITH A SHARP POINTED TOOL.

THE COST OF THE GUARDRAIL ANCHOR ASSEMBLY SHALL BE INCLUDED IN THE UNIT CONTRACT PRICE BID FOR VERTICAL CONCRETE BARRIER RAIL.

THE VERTICAL REINFORCING BARS MAY BE SHIFTED SLIGHTLY IN THE VERTICAL CONCRETE BARRIER RAIL TO CLEAR ASSEMBLY BOLTS.

THE 1 1/4" Ø HOLES SHALL BE FORMED OR DRILLED WITH A CORE BIT. IMPACT TOOLS WILL NOT BE PERMITTED. ANY CONCRETE DAMAGED BY THIS WORK SHALL BE REPAIRED TO THE SATISFACTION OF THE ENGINEER.

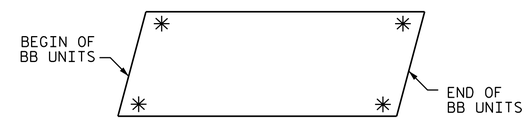


SKETCH SHOWING POINTS OF ATTACHMENT

✳ DENOTES GUARDRAIL ANCHOR ASSEMBLY

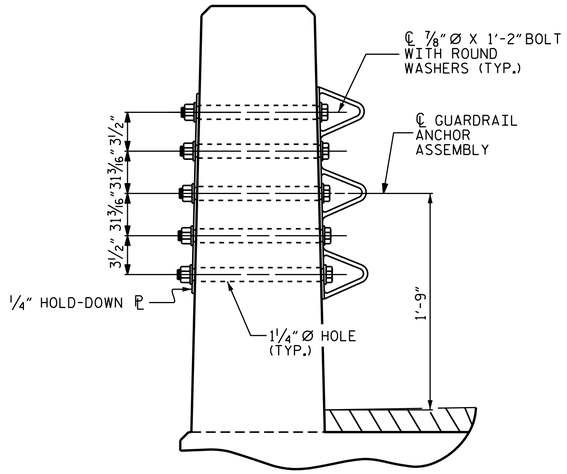


SECTION E-E

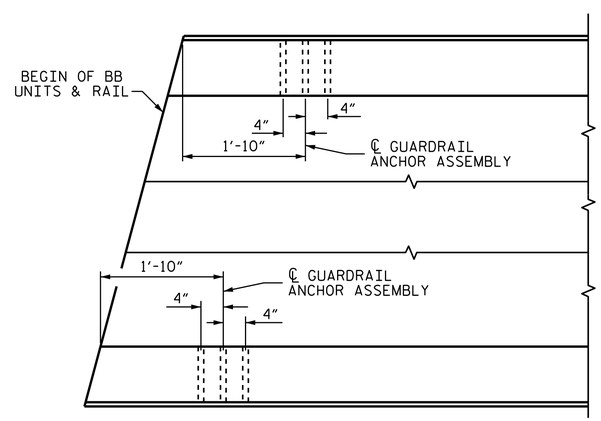


PLAN

## GUARDRAIL ANCHOR ASSEMBLY DETAILS

## LOCATION OF ANCHORS FOR GUARDRAIL

END BENT 1 SHOWN, END BENT 2 SIMILAR.

PROJECT NO. B-5344

GUILFORD COUNTY

STATION: 17+21.00 -L-

NORTH CAROLINA PROFESSIONAL SEAL 16301 ENGINEER TING HSIUNG FANG

DocuSigned by: Ting Fang E72088400977435... 3/22/2016

STATE OF NORTH CAROLINA
DEPARTMENT OF TRANSPORTATION
RALEIGH

GUARDRAIL ANCHORAGE FOR 2'-11" VERTICAL CONCRETE BARRIER RAIL

| | | | |
|---|---|---|---|
| ASSEMBLED BY : H. B. DESAI | DATE : 5-20-15 | | |
| CHECKED BY : D.J. POZOS | DATE : 8-03-15 | | |
| DRAWN BY : MAA 5/10 | ADDED 5/6/10 | | |
| CHECKED BY : GM 5/10 | REV. 10/1/11 | MAA/GM | |
| | REV. 12/5/11 | MAA/GM | |

DOCUMENT NOT CONSIDERED FINAL UNLESS ALL SIGNATURES COMPLETED

| REVISIONS | | | | | | | | SHEET NO. |
|---|---|---|---|---|---|---|---|---|
| NO. | BY: | DATE: | NO. | BY: | DATE: | | | S-10 |
| 1 | | | 3 | | | | | TOTAL SHEETS |
| 2 | | | 4 | | | | | 16 |

08-FEB-2016 15:38
K:\TIPProjects-B\B5344\Structures\Plans\FinalPlans\b5344_sd_bb.dgn
ttfang

## NOTES

STIRRUPS IN CAP MAY BE SHIFTED AS NECESSARY TO CLEAR DOWELS AND ANCHOR BOLTS.

THE CONCRETE IN THE SHADED AREA OF THE WING SHALL BE POURED AFTER THE VERTICAL CONCRETE BARRIER RAIL IS CAST IF SLIP FORMING IS USED.

FOR PILE SPLICE DETAILS, SEE SHEET 4 OF 4.

FOR WING DETAILS, SEE SHEET 3 OF 4.

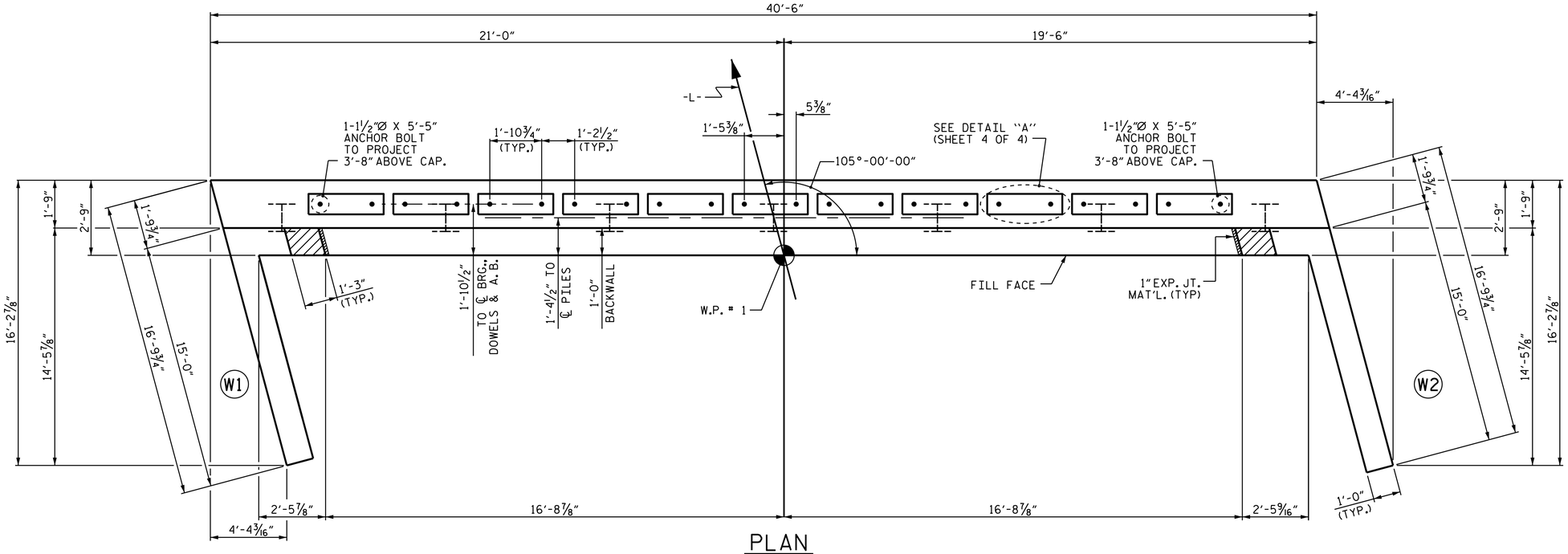


## PLAN

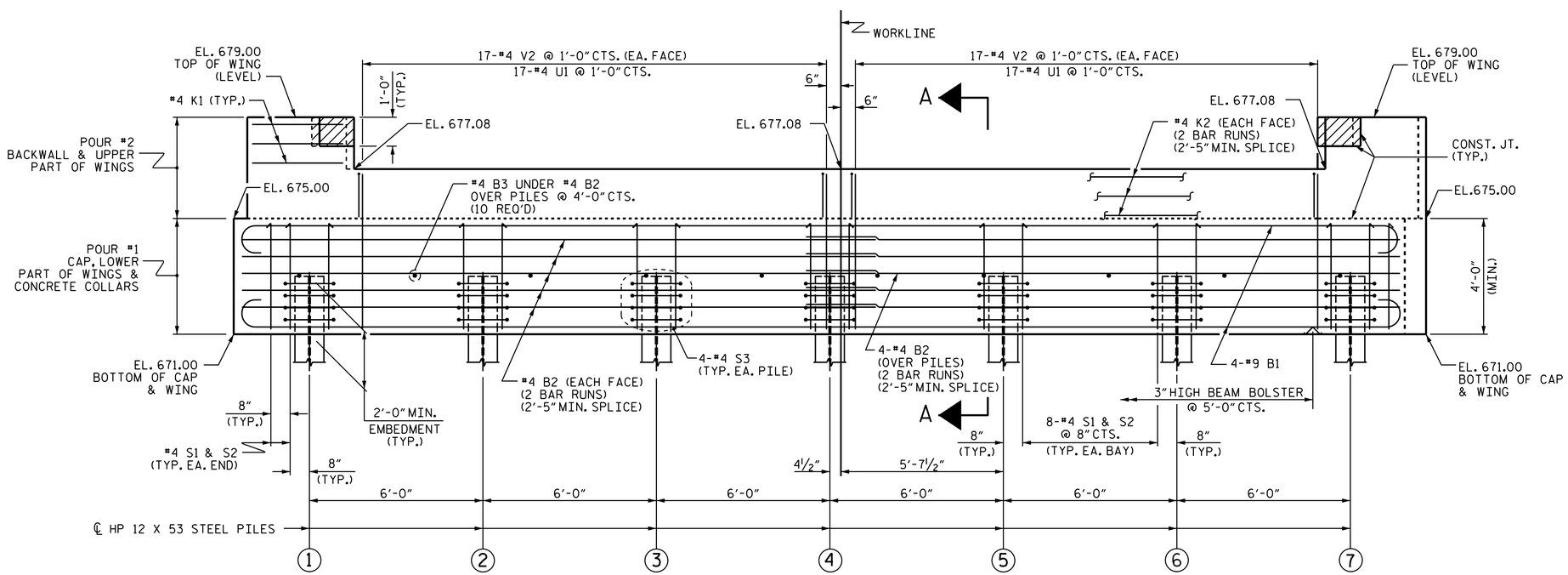


## ELEVATION

WINGS NOT SHOWN FOR CLARITY.
FOR SECTION A-A, SEE SHEET 4 OF 4.
CONCRETE COLLARS FOR STEEL PILES NOT SHOWN IN PLAN AND ELEVATION VIEWS FOR CLARITY.
SEE "CORROSION PROTECTION FOR STEEL PILES DETAIL", SHEET 4 OF 4.

PROJECT NO. B-5344
GUILFORD COUNTY
STATION: 17+21.00 -L-

SHEET 1 OF 4

STATE OF NORTH CAROLINA
DEPARTMENT OF TRANSPORTATION
RALEIGH

SUBSTRUCTURE

END BENT 1

NORTH CAROLINA PROFESSIONAL SEAL 16301 ENGINEER TING HSIUNG FANG

DocuSigned by: Ting Fang E72086400977435... 3/22/2016

| | |
|---|---|
| ASSEMBLED BY : H. B. DESAI | DATE : 05-20-15 |
| CHECKED BY : D.J. POZOS | DATE : 08-03-15 |
| DRAWN BY : WJH 12/11 | REV. 4/15 MAA/TMG |
| CHECKED BY : AAC 12/11 | |

DOCUMENT NOT CONSIDERED FINAL UNLESS ALL SIGNATURES COMPLETED

| REVISIONS | | | | | | | | SHEET NO. |
|---|---|---|---|---|---|---|---|---|
| NO. | BY: | DATE: | NO. | BY: | DATE: | | | S-11 |
| 1 | | | 3 | | | | | TOTAL SHEETS |
| 2 | | | 4 | | | | | 16 |

22-MAR-2016 11:56
K:\TIPProjects-B\B5344\Structures\Plans\FinalPlans\b5344_sd_bb.dgn
tfang

STD. NO. EB_33_105S4_39BB

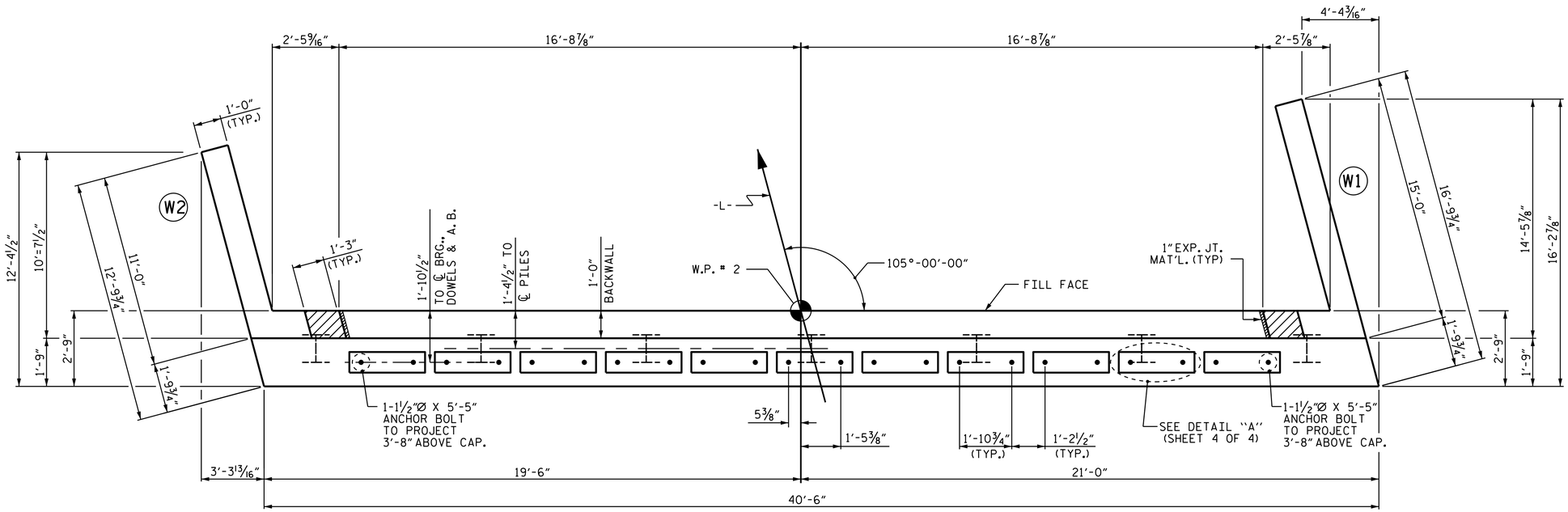


## PLAN

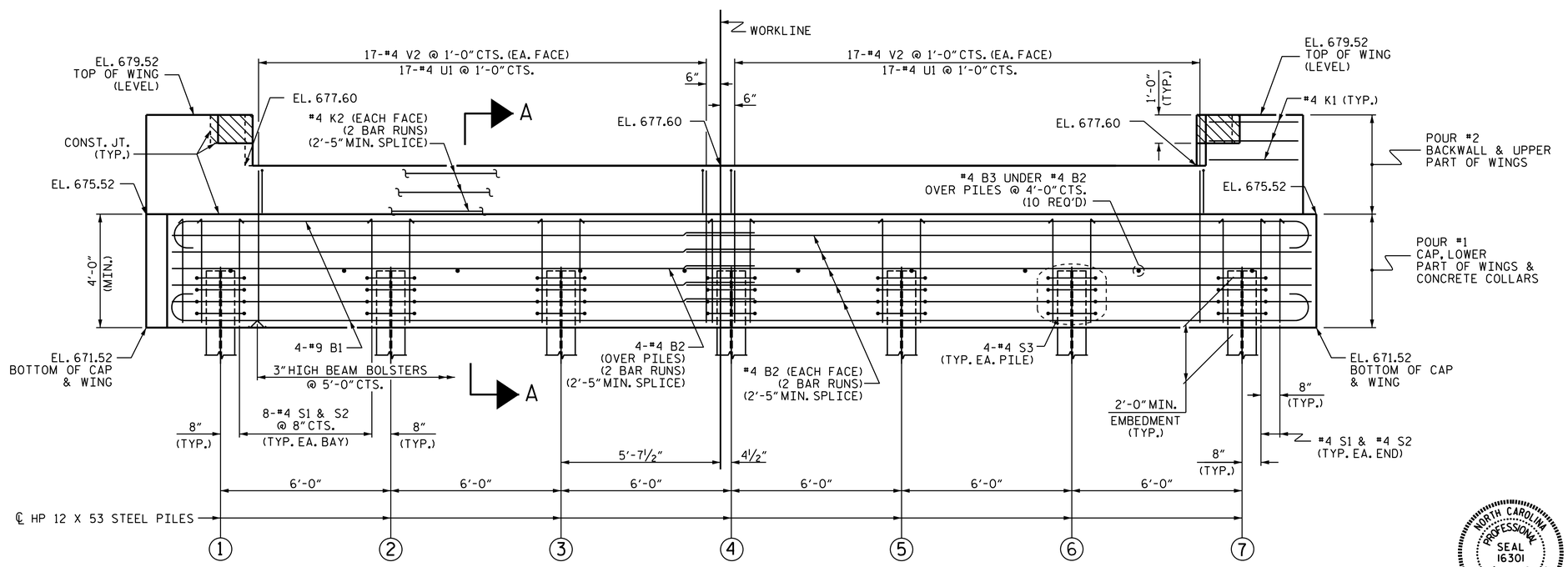


## ELEVATION

WINGS NOT SHOWN FOR CLARITY.
FOR SECTION A-A, SEE SHEET 4 OF 4.
CONCRETE COLLARS FOR STEEL PILES NOT SHOWN IN PLAN AND ELEVATION VIEWS FOR CLARITY.
SEE "CORROSION PROTECTION FOR STEEL PILES DETAIL", SHEET 4 OF 4.

## NOTES

STIRRUPS IN CAP MAY BE SHIFTED AS NECESSARY TO CLEAR DOWELS AND ANCHOR BOLTS.

THE CONCRETE IN THE SHADED AREA OF THE WING SHALL BE POURED AFTER THE VERTICAL CONCRETE BARRIER RAIL IS CAST IF SLIP FORMING IS USED.

FOR PILE SPLICE DETAILS, SEE SHEET 4 OF 4.

FOR WING DETAILS, SEE SHEET 3 OF 4.

PROJECT NO. B-5344
GUILFORD COUNTY
STATION: 17+21.00 -L-

SHEET 2 OF 4

STATE OF NORTH CAROLINA
DEPARTMENT OF TRANSPORTATION
RALEIGH

SUBSTRUCTURE

END BENT 2

NORTH CAROLINA PROFESSIONAL SEAL 16301 ENGINEER TING HSIUNG FANG

DocuSigned by: Ting Fang
E72088400977435...
3/22/2016

| | |
|---|---|
| ASSEMBLED BY : H. B. DESAI | DATE : 05-20-15 |
| CHECKED BY : D.J. POZOS | DATE : 08-03-15 |
| DRAWN BY : WJH 12/11 | REV. 4/15 MAA/TMG |
| CHECKED BY : AAC 12/11 | |

DOCUMENT NOT CONSIDERED FINAL UNLESS ALL SIGNATURES COMPLETED

| REVISIONS | | | | | | | |
|---|---|---|---|---|---|---|---|
| NO. | BY: | DATE: | NO. | BY: | DATE: | SHEET NO. | S-12 |
| 1 | | | 3 | | | TOTAL SHEETS | 16 |
| 2 | | | 4 | | | | |

22-MAR-2016 11:56
K:\TIPProjects-B\B5344\Structures\Plans\FinalPlans\b5344_sd_bb.dgn
ttang

STD. NO. EB_33_105S4_39BB

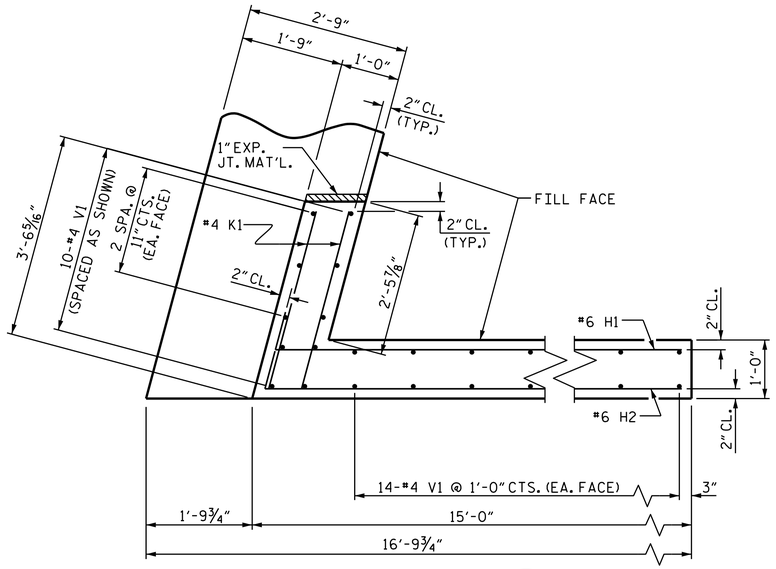


PLAN OF WING (W1)

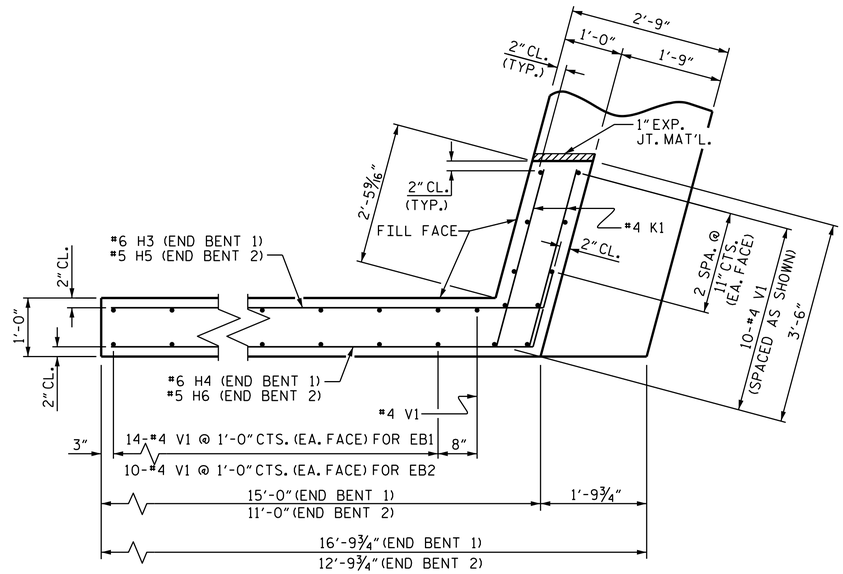


PLAN OF WING (W2)

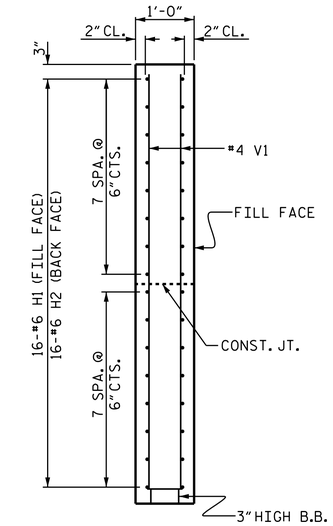


SECTION X-X

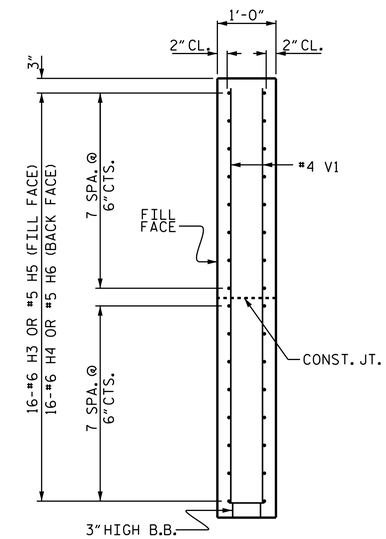


SECTION Y-Y

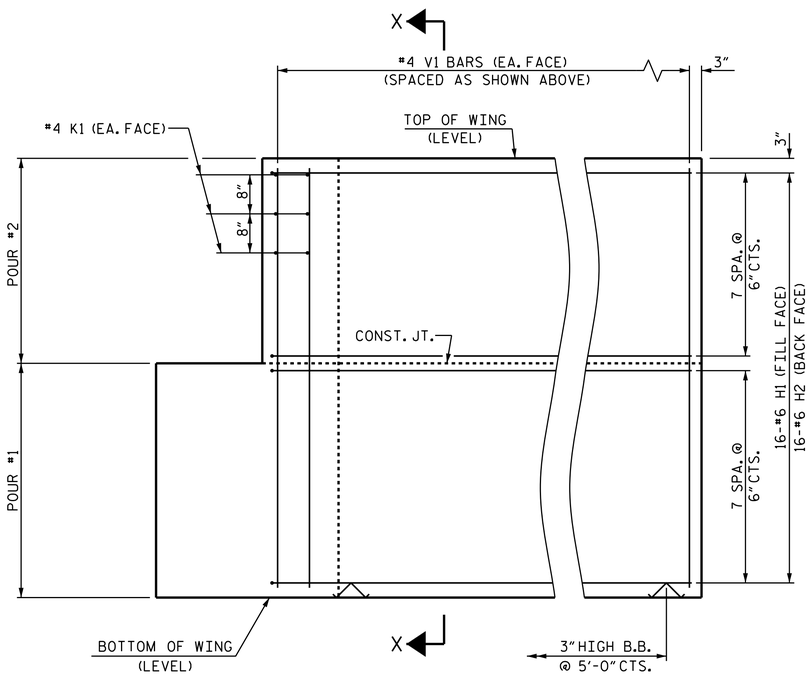


ELEVATION OF WING (W1)

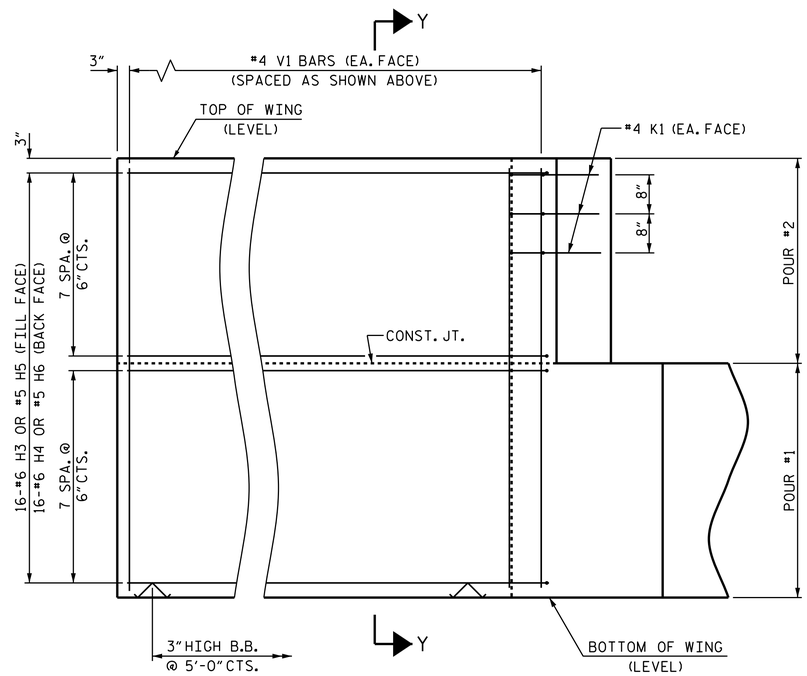


ELEVATION OF WING (W2)

#6 H3 & H4 FOR END BENT 1
#5 H5 & H6 FOR END BENT 2

WING DETAILS

PROJECT NO. B-5344
GUILFORD COUNTY
STATION: 17+21.00 -L-

SHEET 3 OF 4

STATE OF NORTH CAROLINA
DEPARTMENT OF TRANSPORTATION
RALEIGH

SUBSTRUCTURE

END BENT
WING DETAILS

NORTH CAROLINA PROFESSIONAL SEAL 16301 ENGINEER TING HSIUNG FANG

DocuSigned by: Ting Fang
E72008400977435...
3/22/2016

| REVISIONS | | | | | | |
|---|---|---|---|---|---|---|
| NO. | BY: | DATE: | NO. | BY: | DATE: | |
| 1 | | | 3 | | | |
| 2 | | | 4 | | | |

SHEET NO. S-13
TOTAL SHEETS 16

DOCUMENT NOT CONSIDERED FINAL UNLESS ALL SIGNATURES COMPLETED

| | |
|---|---|
| ASSEMBLED BY : H. B. DESAI | DATE : 05-20-15 |
| CHECKED BY : D.J. POZOS | DATE : 08-03-15 |
| DRAWN BY : WJH 12/11 | REV. 4/15 MAA/TMG |
| CHECKED BY : AAC 12/11 | |

08-FEB-2016 15:38
K:\TIPProjects-B\B5344\Structures\Plans\FinalPlans\b5344_sd_bb.dgn
ttfang

STD. NO. EB_33_105S4_39BB

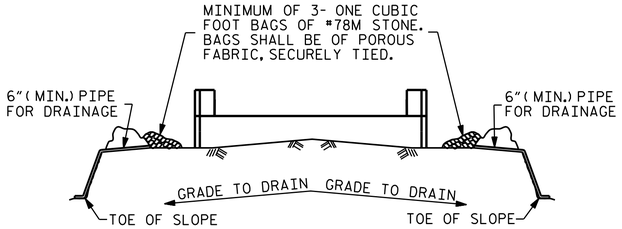


BAGGED STONE AND PIPE SHALL BE PLACED IMMEDIATELY AFTER COMPLETION OF END BENT EXCAVATION. PIPE MAY BE EITHER CONCRETE, CORRUGATED STEEL, CORRUGATED ALUMINUM ALLOY, OR CORRUGATED PLASTIC. PERFORATED PIPE WILL NOT BE ALLOWED.

BAGGED STONE SHALL REMAIN IN PLACE UNTIL THE ENGINEER DIRECTS THAT IT BE REMOVED. THE CONTRACTOR SHALL REMOVE AND DISPOSE OF SILT ACCUMULATIONS AT BAGGED STONE WHEN SO DIRECTED BY THE ENGINEER. BAGS SHALL BE REMOVED AND REPLACED WHENEVER THE ENGINEER DETERMINES THAT THEY HAVE DETERIORATED AND LOST THEIR EFFECTIVENESS.

NO SEPARATE PAYMENT WILL BE MADE FOR THIS WORK AND THE ENTIRE COST OF THIS WORK SHALL BE INCLUDED IN THE UNIT CONTRACT PRICE BID FOR THE SEVERAL PAY ITEMS.

## TEMPORARY DRAINAGE AT END BENT

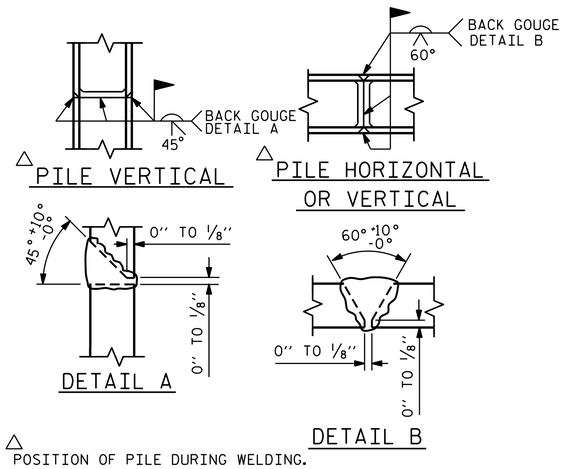


△ POSITION OF PILE DURING WELDING.

## PILE SPLICE DETAILS

## BAR TYPES

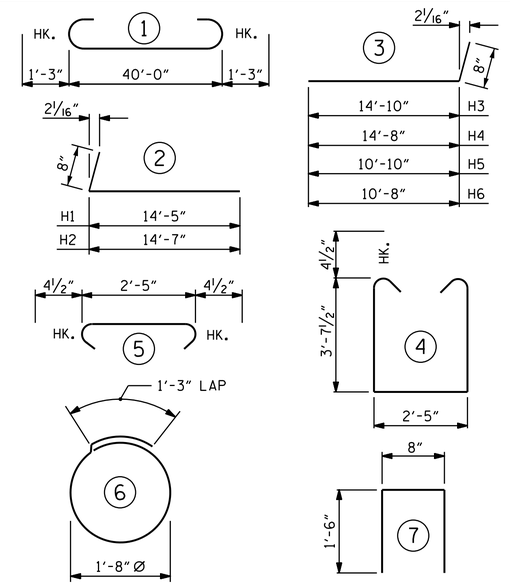


ALL BAR DIMENSIONS ARE OUT TO OUT.

| END BENT 1 | END BENT 2 |
|---|---|
| HP 12 X 53 STEEL PILES | HP 12 X 53 STEEL PILES |
| NO: 7 LIN. FT.= 70 | NO: 7 LIN. FT.= 70 |
| PILE EXCAVATION IN SOIL LIN. FT.= 28 | PILE EXCAVATION IN SOIL LIN. FT.= 48 |
| PILE EXCAVATION NOT IN SOIL LIN. FT.= 42 | PILE EXCAVATION NOT IN SOIL LIN. FT.= 22 |

## BILL OF MATERIAL

| END BENT 1 | | | | | | END BENT 2 | | | | | |
|---|---|---|---|---|---|---|---|---|---|---|---|
| BAR | NO. | SIZE | TYPE | LENGTH | WEIGHT | BAR | NO. | SIZE | TYPE | LENGTH | WEIGHT |
| B1 | 8 | #9 | 1 | 42'-6" | 1156 | B1 | 8 | #9 | 1 | 42'-6" | 1156 |
| B2 | 28 | #4 | STR | 21'-4" | 399 | B2 | 28 | #4 | STR | 21'-4" | 399 |
| B3 | 10 | #4 | STR | 2'-5" | 16 | B3 | 10 | #4 | STR | 2'-5" | 16 |
| D1 | 22 | #8 | STR | 2'-3" | 132 | D1 | 22 | #8 | STR | 2'-3" | 132 |
| H1 | 16 | #6 | 2 | 15'-1" | 362 | H1 | 16 | #6 | 2 | 15'-1" | 362 |
| H2 | 16 | #6 | 2 | 15'-3" | 366 | H2 | 16 | #6 | 2 | 15'-3" | 366 |
| H3 | 16 | #6 | 3 | 15'-6" | 372 | H5 | 16 | #5 | 3 | 11'-6" | 192 |
| H4 | 16 | #6 | 3 | 15'-4" | 368 | H6 | 16 | #5 | 3 | 11'-4" | 188 |
| K1 | 12 | #4 | STR | 3'-1" | 25 | K1 | 12 | #4 | STR | 3'-1" | 25 |
| K2 | 12 | #4 | STR | 21'-4" | 171 | K2 | 12 | #4 | STR | 21'-4" | 171 |
| S1 | 52 | #4 | 4 | 10'-5" | 362 | S1 | 52 | #4 | 4 | 10'-5" | 362 |
| S2 | 52 | #4 | 5 | 3'-2" | 110 | S2 | 52 | #4 | 5 | 3'-2" | 110 |
| S3 | 28 | #4 | 6 | 6'-6" | 122 | S3 | 28 | #4 | 6 | 6'-6" | 122 |
| U1 | 34 | #4 | 7 | 3'-8" | 83 | U1 | 34 | #4 | 7 | 3'-8" | 83 |
| V1 | 77 | #4 | STR | 7'-8" | 394 | V1 | 69 | #4 | STR | 7'-8" | 353 |
| V2 | 68 | #4 | STR | 5'-9" | 261 | V2 | 68 | #4 | STR | 5'-9" | 261 |
| REINFORCING STEEL | | | | | 4699 LBS. | REINFORCING STEEL | | | | | 4298 LBS. |

| CLASS A CONCRETE BREAKDOWN | | | CLASS A CONCRETE BREAKDOWN | | |
|---|---|---|---|---|---|
| POUR #1 | CAP, LOWER PART OF WINGS & COLLARS | 21.9 C.Y. | POUR #1 | CAP, LOWER PART OF WINGS & COLLARS | 21.3 C.Y. |
| POUR #2 | BACKWALL & UPPER PART OF WINGS | 7.8 C.Y. | POUR #2 | BACKWALL & UPPER PART OF WINGS | 7.2 C.Y. |
| TOTAL CLASS A CONCRETE | | 29.7 C.Y. | TOTAL CLASS A CONCRETE | | 28.5 C.Y. |

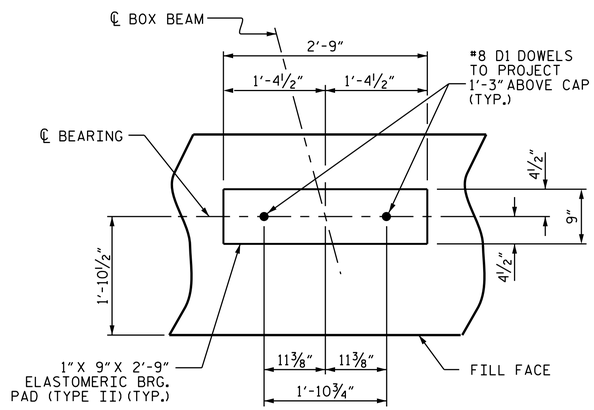


## DETAIL "A"

(END BENT 1 SHOWN, END BENT 2 SIMILAR BY ROTATION)

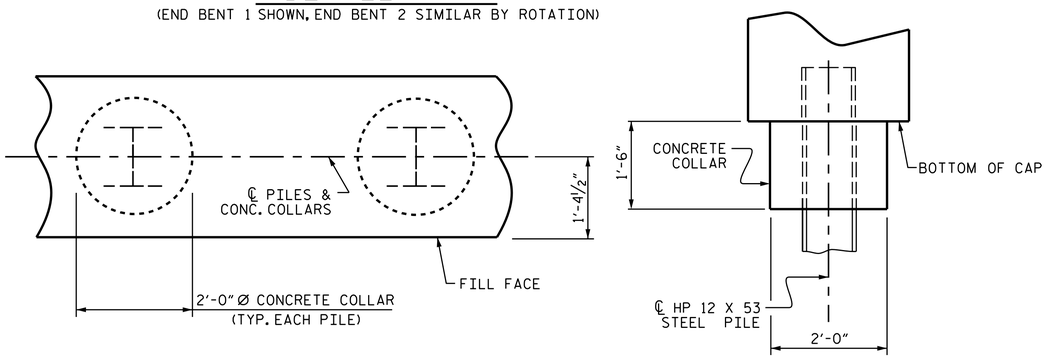


PLAN

ELEVATION

## CORROSION PROTECTION FOR STEEL PILES DETAIL

(END BENT 1 SHOWN, END BENT 2 SIMILAR BY ROTATION)

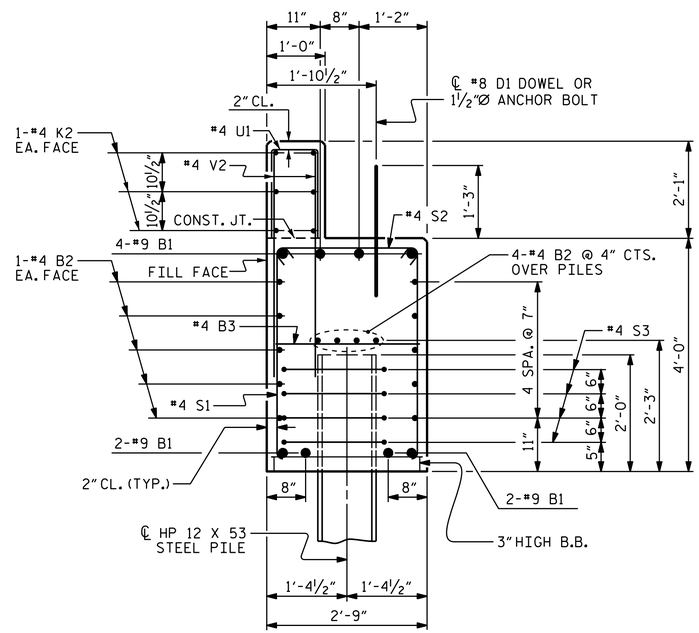


## SECTION A-A

(CONCRETE COLLAR NOT SHOWN FOR CLARITY. SEE "CORROSION PROTECTION FOR STEEL PILES DETAIL.")

NORTH CAROLINA PROFESSIONAL SEAL 16301 ENGINEER TING HSIUNG FANG

DocuSigned by: Ting Fang E72068400977435... 3/22/2016

PROJECT NO. B-5344

GUILFORD COUNTY

STATION: 17+21.00 -L-

SHEET 4 OF 4

STATE OF NORTH CAROLINA
DEPARTMENT OF TRANSPORTATION
RALEIGH

SUBSTRUCTURE

END BENTS 1 & 2 DETAILS

| | |
|---|---|
| ASSEMBLED BY : H. B. DESAI | DATE : 5-22-15 |
| CHECKED BY : D.J. POZOS | DATE : 8-03-15 |
| DRAWN BY : WJH 12/11 | REV. 8/14 MAA/TMG |
| CHECKED BY : AAC 12/11 | |

DOCUMENT NOT CONSIDERED FINAL UNLESS ALL SIGNATURES COMPLETED

| REVISIONS | | | | | | SHEET NO. |
|---|---|---|---|---|---|---|
| NO. | BY: | DATE: | NO. | BY: | DATE: | S-14 |
| 1 | | | 3 | | | TOTAL SHEETS |
| 2 | | | 4 | | | 16 |

09-FEB-2016 15:04
K:\TIPProjects-B\B5344\Structures\Plans\FinalPlans\b5344_sd_bb.dgn
ttfang

STD. NO. EB_33_105S4_39BB

| ESTIMATED QUANTITIES | | |
|---|---|---|
| BRIDGE @ STA. 17+21.00 -L- | RIP RAP CLASS II (2'-0" THICK) | GEOTEXTILE FOR DRAINAGE |
| | TONS | SQUARE YARDS |
| END BENT 1 | 45 | 50 |
| END BENT 2 | 50 | 55 |

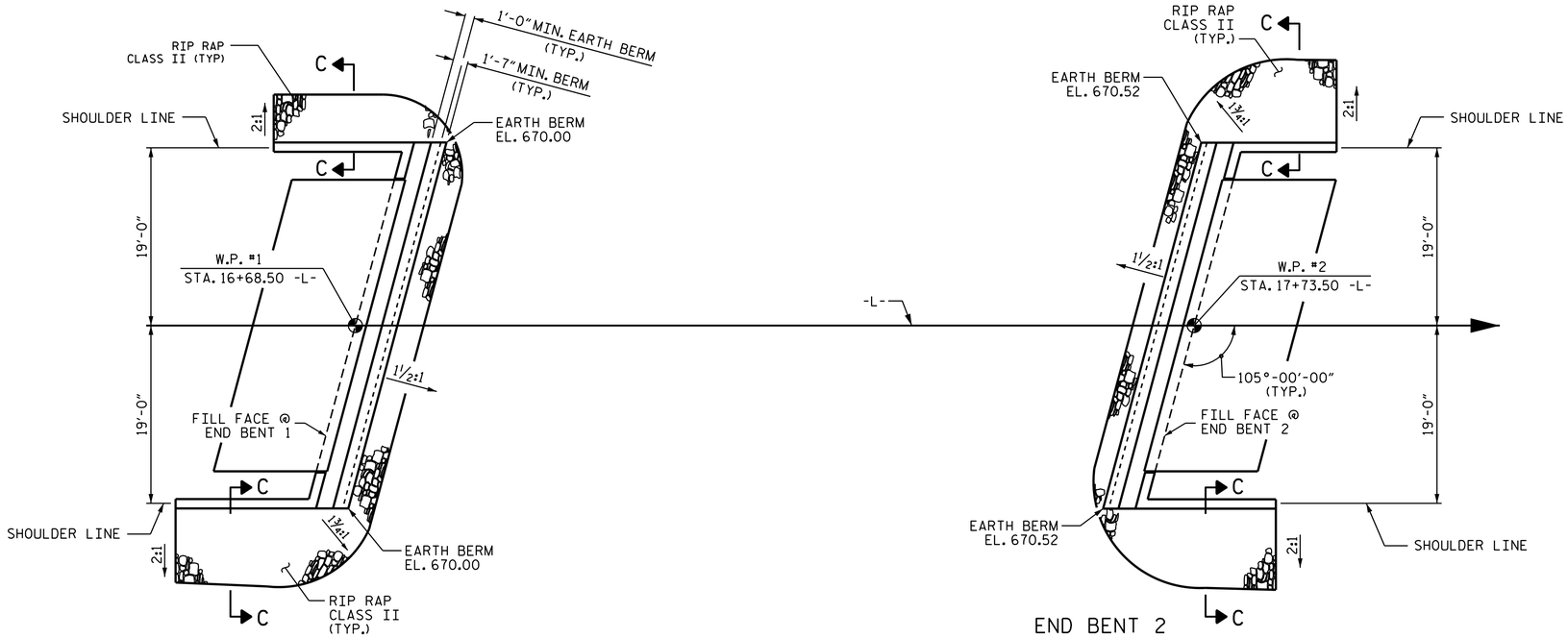


PLAN OF RIP RAP

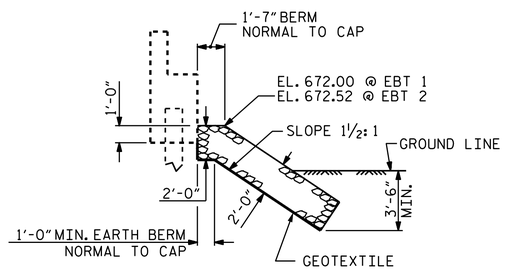


℄ SECTION
BERM RIP RAPPED

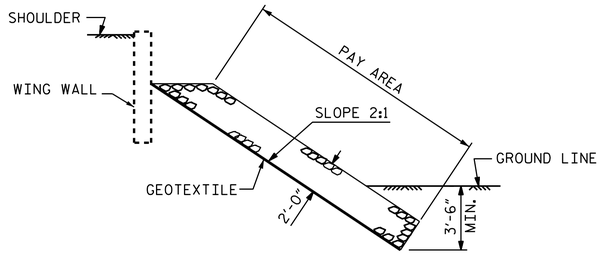


SECTION C-C

PROJECT NO. B-5344
GUILFORD COUNTY
STATION: 17+21.00 -L-

STATE OF NORTH CAROLINA
DEPARTMENT OF TRANSPORTATION
RALEIGH

STANDARD

RIP RAP DETAILS

NORTH CAROLINA PROFESSIONAL SEAL 16301 ENGINEER TING HSIUNG FANG

Docusigned by: Ting Fang 3/22/2016

DOCUMENT NOT CONSIDERED FINAL UNLESS ALL SIGNATURES COMPLETED

| REVISIONS | | | | | | |
|---|---|---|---|---|---|---|
| NO. | BY: | DATE: | NO. | BY: | DATE: | |
| 1 | | | 3 | | | |
| 2 | | | 4 | | | |

SHEET NO. S-15
TOTAL SHEETS 16

STD. NO. RR1

| | | | |
|---|---|---|---|
| ASSEMBLED BY : H. B. DESAI | | DATE : 5-26-15 | |
| CHECKED BY : D.J. POZOS | | DATE : 8-03-15 | |
| DRAWN BY : REK 1/84 | REV. 5/1/06R | TLA/GM | |
| CHECKED BY : RDU 1/84 | REV. 10/1/11 | MAA/GM | |
| | REV. 12/21/11 | MAA/GM | |

08-FEB-2016 15:38
K:\TIPProjects-B\B5344\Structures\Plans\Final Plans\b5344_sd_bb.dgn
ttfang

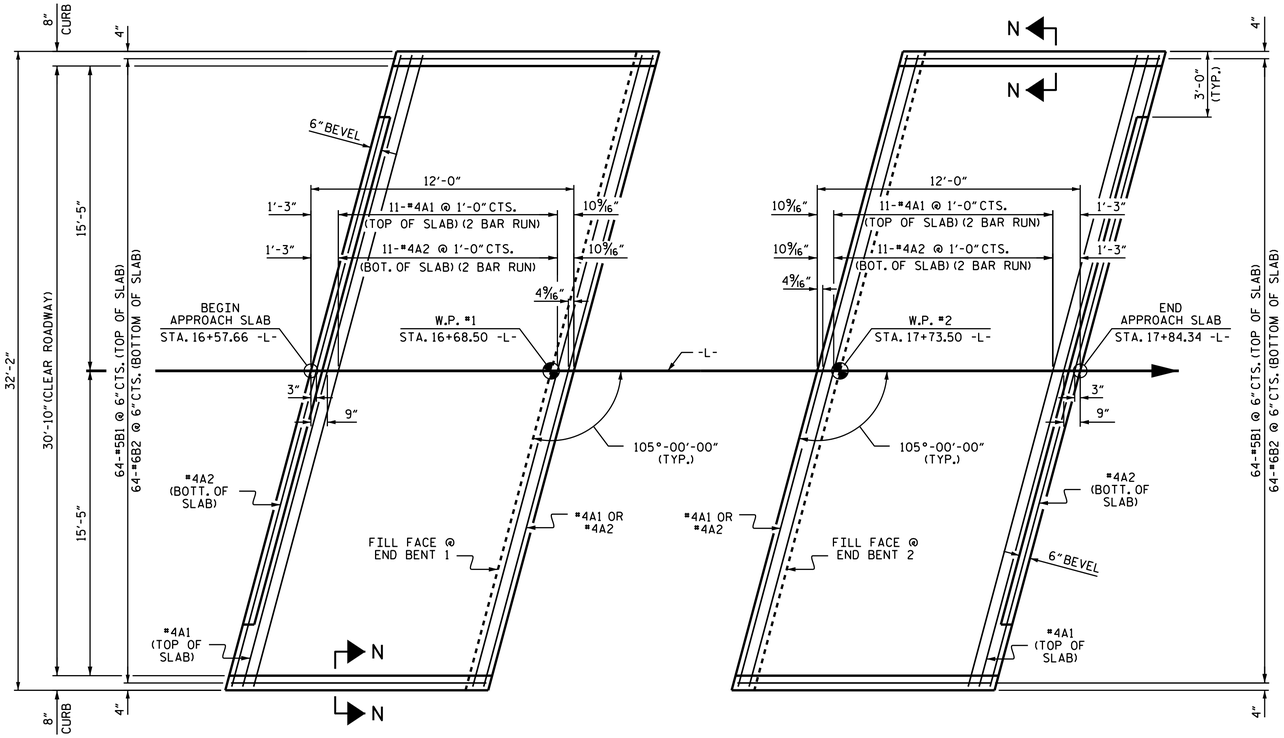


AT END BENT 1

AT END BENT 2

## PLAN

DIMENSIONS SHOWN ARE TYPICAL FOR BOTH APPROACH SLABS

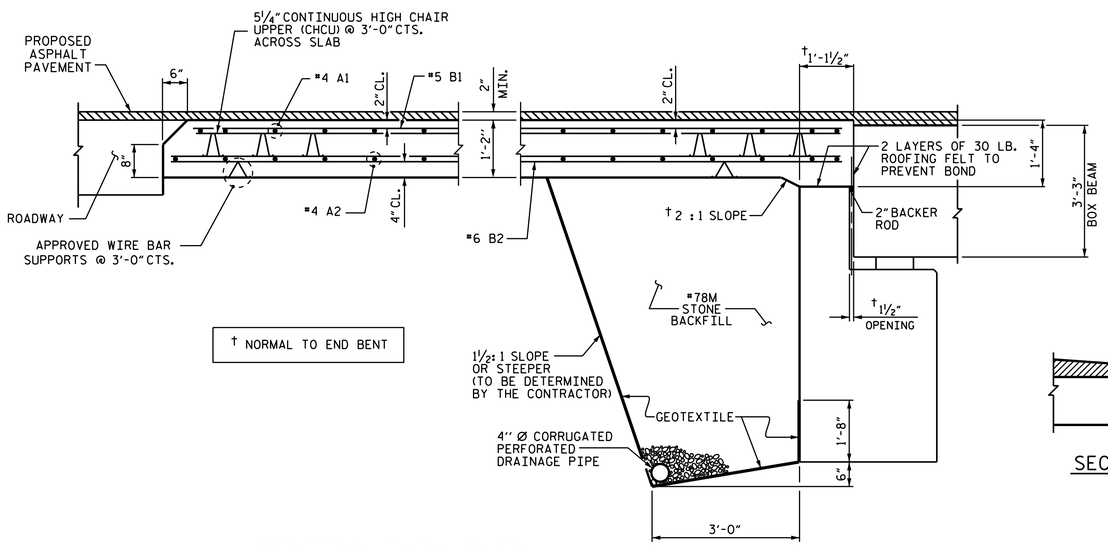


## SECTION THRU SLAB

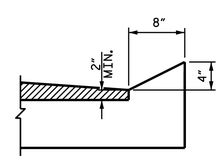


SECTION N-N

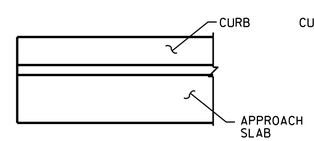


END OF CURB WITH SHOULDER BERM GUTTER

AT END BENT 1, BOTH SIDES

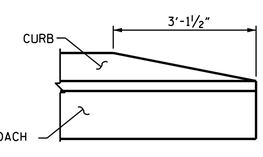


END OF CURB WITHOUT SHOULDER BERM GUTTER

AT END BENT 2, BOTH SIDES

## CURB DETAILS

## NOTES

FOR BRIDGE APPROACH FILL INCLUDING GEOTEXTILE, 4" Ø DRAINAGE PIPE, AND #78M STONE BACKFILL, SEE ROADWAY PLANS.

GEOTEXTILE SHALL BE TYPE 1 IN ACCORDANCE WITH THE STANDARD SPECIFICATIONS SECTION 1056.

#78M STONE BACKFILL (CLASS V SELECT MATERIAL) SHALL BE IN ACCORDANCE WITH STANDARD SPECIFICATIONS SECTION 1016.

#78M STONE BACKFILL IS TO BE CONTINUOUS ALONG FILL FACE OF BACKWALL FROM OUTSIDE EDGE TO OUTSIDE EDGE OF APPROACH SLAB.

FOR THE 4" Ø DRAINAGE PIPE OUTLET(S), SEE ROADWAY STANDARD DRAWINGS.

AREA BETWEEN THE WINGWALL AND APPROACH SLAB SHALL BE GRADED TO DRAIN THE WATER AWAY FROM THE FILL FACE OF THE BRIDGE AND SHALL BE PAVED. SEE ROADWAY PLANS.

APPROACH SLAB GROOVING IS NOT REQUIRED.

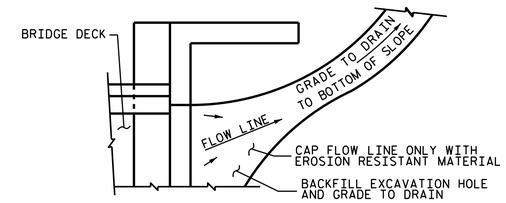


NOTE: IF THE APPROACH SLAB IS NOT CONSTRUCTED IMMEDIATELY AFTER THE BACKFILLING OF THE END BENT EXCAVATION, GRADE TO DRAIN TO THE BOTTOM OF THE SLOPE AND PROVIDE EROSION RESISTANT MATERIAL, SUCH AS FIBERGLASS ROVING OR AS DIRECTED BY THE ENGINEER TO PREVENT SOIL EROSION AND TO PROTECT THE AREA ADJACENT TO THE STRUCTURE. THE CONTRACTOR WILL BE REQUIRED TO REMOVE THESE MATERIALS PRIOR TO CONSTRUCTION OF THE APPROACH SLAB.

TEMPORARY DRAINAGE DETAIL

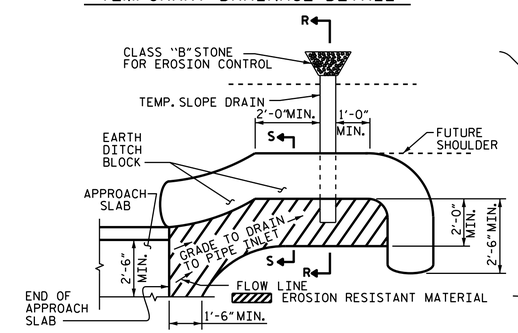


NOTE: IMMEDIATELY AFTER THE CONSTRUCTION OF THE APPROACH SLAB, THE CONTRACTOR SHALL PROVIDE TEMPORARY BERM AND SLOPE DRAIN. CONTRACTOR SHALL GRADE TO PIPE INLET AND PROVIDE EROSION RESISTANT MATERIAL AS SHOWN. THE EROSION RESISTANT MATERIAL SHALL BE EITHER 1) ASPHALT PLANT MIX, TYPE 1 OR TYPE 2, MIN. 2" DEPTH, 2) EROSION CONTROL MAT, OR 3) CONCRETE, AS DIRECTED BY THE ENGINEER. THE SLOPE DRAIN SHALL CONSIST OF A NON-PERFORATED TEMPORARY DRAINAGE PIPE, 12 INCHES IN DIAMETER.

PLAN VIEW

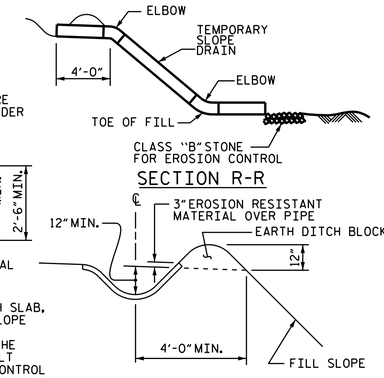


SECTION R-R

SECTION S-S

## TEMPORARY BERM AND SLOPE DRAIN DETAILS

(TO BE USED WHEN SHOULDER BERM GUTTER IS REQUIRED)

## BILL OF MATERIAL

### APPROACH SLAB AT EB 1

| BAR | NO. | SIZE | TYPE | LENGTH | WEIGHT |
|---|---|---|---|---|---|
| * A1 | 26 | #4 | STR | 17'-6" | 304 |
| A2 | 26 | #4 | STR | 17'-5" | 302 |
| | | | | | |
| * B1 | 64 | #5 | STR | 11'-1" | 740 |
| B2 | 64 | #6 | STR | 11'-7" | 1113 |
| | | | | | |
| REINFORCING STEEL | | | | LBS. | 1415 |
| * EPOXY COATED REINFORCING STEEL | | | | LBS. | 1044 |
| | | | | | |
| CLASS AA CONCRETE | | | | C. Y. | 17.7 |

### APPROACH SLAB AT EB 2

| BAR | NO. | SIZE | TYPE | LENGTH | WEIGHT |
|---|---|---|---|---|---|
| * A1 | 26 | #4 | STR | 17'-6" | 304 |
| A2 | 26 | #4 | STR | 17'-5" | 302 |
| | | | | | |
| * B1 | 64 | #5 | STR | 11'-1" | 740 |
| B2 | 64 | #6 | STR | 11'-7" | 1113 |
| | | | | | |
| REINFORCING STEEL | | | | LBS. | 1415 |
| * EPOXY COATED REINFORCING STEEL | | | | LBS. | 1044 |
| | | | | | |
| CLASS AA CONCRETE | | | | C. Y. | 17.7 |

## SPLICE LENGTHS

| BAR SIZE | EPOXY COATED | UNCOATED |
|---|---|---|
| #4 | 2'-0" | 1'-9" |
| #5 | 2'-6" | 2'-2" |
| #6 | 3'-10" | 2'-7" |

PROJECT NO. B-5344

GUILFORD COUNTY

STATION: 17+21.00 -L-

STATE OF NORTH CAROLINA
DEPARTMENT OF TRANSPORTATION
RALEIGH

STANDARD
BRIDGE APPROACH SLAB
FOR PRESTRESSED CONCRETE
BOX BEAM UNIT
(SUB-REGIONAL TIER)
105° SKEW

NORTH CAROLINA PROFESSIONAL SEAL 16301 ENGINEER TING-HSIUNG FANG

DocuSigned by: Ting Fang
E72088409977438...
3/22/2016

DOCUMENT NOT CONSIDERED FINAL UNLESS ALL SIGNATURES COMPLETED

| REVISIONS | | | | | | | |
|---|---|---|---|---|---|---|---|
| NO. | BY: | DATE: | NO. | BY: | DATE: | | |
| 1 | | | 3 | | | | |
| 2 | | | 4 | | | | |

SHEET NO. S-16

TOTAL SHEETS 16

ASSEMBLED BY : H. B. DESAI DATE : 5-22-15
CHECKED BY : D.J. POZOS DATE : 8-03-15

DRAWN BY : MAA 11/11
CHECKED BY : AAC 11/11

22-MAR-2016 11:56
K:\TIPProjects-B\B5344\Structures\Plans\FinalPlans\b5344_sd_bb.dgn
ttfang

STD. NO. BAS_BB_30_105S

# STANDARD NOTES

## DESIGN DATA:

| | |
|---|---|
| SPECIFICATIONS | A.A.S.H.T.O. (CURRENT) |
| LIVE LOAD | SEE PLANS |
| IMPACT ALLOWANCE | SEE A.A.S.H.T.O. |
| STRESS IN EXTREME FIBER OF | |
| STRUCTURAL STEEL - AASHTO M270 GRADE 36 | 20,000 LBS. PER SQ. IN. |
| - AASHTO M270 GRADE 50W | 27,000 LBS. PER SQ. IN. |
| - AASHTO M270 GRADE 50 | 27,000 LBS. PER SQ. IN. |
| REINFORCING STEEL IN TENSION | |
| GRADE 60 | 24,000 LBS. PER SQ. IN. |
| CONCRETE IN COMPRESSION | 1,200 LBS. PER SQ. IN. |
| CONCRETE IN SHEAR | SEE A.A.S.H.T.O. |
| STRUCTURAL TIMBER - TREATED OR | |
| UNTREATED - EXTREME FIBER STRESS | 1,800 LBS. PER SQ. IN. |
| COMPRESSION PERPENDICULAR TO GRAIN OF TIMBER | 375 LBS. PER SQ. IN. |
| EQUIVALENT FLUID PRESSURE OF EARTH | 30 LBS. PER CU. FT. (MINIMUM) |

## MATERIAL AND WORKMANSHIP:

EXCEPT AS MAY OTHERWISE BE SPECIFIED ON PLANS OR IN THE SPECIAL PROVISIONS, ALL MATERIAL AND WORKMANSHIP SHALL BE IN ACCORDANCE WITH THE 2012 "STANDARD SPECIFICATIONS FOR ROADS AND STRUCTURES" OF THE N.C. DEPARTMENT OF TRANSPORTATION.

STEEL SHEET PILING FOR PERMANENT OR TEMPORARY APPLICATIONS SHALL BE HOT ROLLED.

## CONCRETE:

UNLESS OTHERWISE REQUIRED ON PLANS, CLASS A CONCRETE SHALL BE USED FOR ALL PORTIONS OF ALL STRUCTURES WITH THE EXCEPTION THAT: CLASS AA CONCRETE SHALL BE USED IN BRIDGE SUPERSTRUCTURES, ABUTMENT BACKWALLS, AND APPROACH SLABS; AND CLASS B CONCRETE SHALL BE USED FOR SLOPE PROTECTION AND RIP RAP.

## CONCRETE CHAMFERS:

UNLESS OTHERWISE NOTED ON THE PLANS, ALL EXPOSED CORNERS ON STRUCTURES SHALL BE CHAMFERED 3/4" WITH THE FOLLOWING EXCEPTIONS: TOP CORNERS OF CURBS MAY BE ROUNDED TO 1-1/2" RADIUS WHICH IS BUILT INTO CURB FORMS; CORNERS OF TRANSVERSE FLOOR EXPANSION JOINTS SHALL BE ROUNDED WITH A 1/4" FINISHING TOOL UNLESS OTHERWISE REQUIRED ON PLANS; AND CORNERS OF EXPANSION JOINTS IN THE ROADWAY FACES AND TOPS OF CURBS AND SIDEWALKS SHALL BE ROUNDED TO A 1/4" RADIUS WITH A FINISHING STONE OR TOOL UNLESS OTHERWISE REQUIRED ON PLANS.

## DOWELS:

DOWELS WHEN INDICATED ON PLANS AS FOR CULVERT EXTENSIONS, SHALL BE EMBEDDED AT LEAST 12" INTO THE OLD CONCRETE AND GROUTED INTO PLACE WITH 1:2 CEMENT MORTAR.

## ALLOWANCE FOR DEAD LOAD DEFLECTION, SETTLEMENT, ETC. IN CASTING SUPERSTRUCTURES:

BRIDGES SHALL BE BUILT ON THE GRADE OR VERTICAL CURVE SHOWN ON PLANS. SLABS, CURBS AND PARAPETS SHALL CONFORM TO THE GRADE OR CURVE.

ALL DIMENSIONS WHICH ARE GIVEN IN SECTION AND ARE AFFECTED BY DEAD LOAD DEFLECTIONS ARE DIMENSIONS AT CENTER LINE OF BEARING UNLESS OTHERWISE NOTED ON PLANS. IN SETTING FORMS FOR STEEL BEAM BRIDGES AND PRESTRESSED CONCRETE GIRDER BRIDGES, ADJUSTMENTS SHALL BE MADE DUE TO THE DEAD LOAD DEFLECTIONS FOR THE ELEVATIONS SHOWN. WHERE BLOCKS ARE SHOWN OVER BEAMS FOR BUILDING UP TO THE SLAB, THE VERTICAL DIMENSIONS OF THE BLOCKS SHALL BE ADJUSTED BETWEEN BEARINGS TO COMPENSATE FOR DEAD LOAD DEFLECTIONS, VERTICAL CURVE ORDINATE, AND ACTUAL BEAM CAMBER. WHERE BOTTOM OF SLAB IS IN LINE WITH BOTTOM OF TOP FLANGES, DEPTH OF SLAB BETWEEN BEARINGS SHALL BE ADJUSTED TO COMPENSATE FOR DEAD LOAD DEFLECTION, VERTICAL CURVE ORDINATE, AND ACTUAL BEAM CAMBER.

IN SETTING FALSEWORK AND FORMS FOR REINFORCED CONCRETE SPANS, AN ALLOWANCE SHALL BE MADE FOR DEAD LOAD DEFLECTIONS, SETTLEMENT OF FALSEWORK, AND PERMANENT CAMBER WHICH SHALL BE PROVIDED FOR IN ADDITION TO THE ELEVATIONS SHOWN. AFTER REMOVAL OF THE FALSEWORK, THE FINISHED STRUCTURES SHALL CONFORM TO THE PROFILE AND ELEVATIONS SHOWN ON THE PLANS AND CONSTRUCTION ELEVATIONS FURNISHED BY THE ENGINEER.

DETAILED DRAWINGS FOR FALSEWORK OR FORMS FOR BRIDGE SUPERSTRUCTURE AND ANY STRUCTURE OR PARTS OF A STRUCTURE AS NOTED ON THE PLANS SHALL BE SUBMITTED TO THE ENGINEER FOR APPROVAL BEFORE CONSTRUCTION OF THE FALSEWORK OR FORMS IS STARTED.

## REINFORCING STEEL:

ALL REINFORCING STEEL SHALL BE DEFORMED. DIMENSIONS RELATIVE TO PLACEMENT OF REINFORCING ARE TO CENTERS OF BARS UNLESS OTHERWISE INDICATED IN THE PLANS. DIMENSIONS ON BAR DETAILS ARE TO CENTERS OF BARS OR ARE OUT TO OUT AS INDICATED ON PLANS.

WIRE BAR SUPPORTS SHALL BE PROVIDED FOR REINFORCING STEEL WHERE INDICATED ON THE PLANS. WHEN BAR SUPPORT PIECES ARE PLACED IN CONTINUOUS LINES, THEY SHALL BE SO PLACED THAT THE ENDS OF THE SUPPORTING WIRES SHALL BE LAPPED TO LOCK LEGS ON ADJOINING PIECES.

## STRUCTURAL STEEL:

AT THE CONTRACTOR'S OPTION, HE MAY SUBSTITUTE 7/8" Ø SHEAR STUDS FOR THE ¾" Ø STUDS SPECIFIED ON THE PLANS. THIS SUBSTITUTION SHALL BE MADE AT THE RATE OF 3 - 7/8" Ø STUDS FOR 4 - 3/4" Ø STUDS, AND STUD SPACING CHANGES SHALL BE MADE AS NECESSARY TO PROVIDE THE SAME EQUIVALENT NUMBER OF 7/8" Ø STUDS ALONG THE BEAM AS SHOWN FOR 3/4" Ø STUDS BASED ON THE RATIO OF 3 - 7/8" Ø STUDS FOR 4 - 3/4" Ø STUDS. STUDS OF THE LENGTH SPECIFIED ON THE PLANS MUST BE PROVIDED. THE MAXIMUM SPACING SHALL BE 2'-0".

EXCEPT AT THE INTERIOR SUPPORTS OF CONTINUOUS BEAMS WHERE THE COVER PLATE IS IN CONTACT WITH BEARING PLATE, THE CONTRACTOR MAY, AT HIS OPTION, SUBSTITUTE FOR THE COVER PLATES DESIGNATED ON THE PLANS COVER PLATES OF THE EQUIVALENT AREA PROVIDED THESE PLATES ARE AT LEAST 5/16" IN THICKNESS AND DO NOT EXCEED A WIDTH EQUAL TO THE FLANGE WIDTH LESS 2" OR A THICKNESS EQUAL TO 2 TIMES THE FLANGE THICKNESS. THE SIZE OF FILLET WELDS SHALL CONFORM TO THE REQUIREMENTS OF THE CURRENT ANSI/AASHTO/AWS "BRIDGE WELDING CODE". ELECTROSLAG WELDING WILL NOT BE PERMITTED.

WITH THE SOLE EXCEPTION OF EDGES AT SURFACES WHICH BEAR ON OTHER SURFACES, ALL SHARP EDGES AND ENDS OF SHAPES AND PLATES SHALL BE SLIGHTLY ROUNDED BY SUITABLE MEANS TO A RADIUS OF APPROXIMATELY 1/16 INCH OR EQUIVALENT FLAT SURFACE AT A SUITABLE ANGLE PRIOR TO PAINTING, GALVANIZING, OR METALLIZING.

## HANDRAILS AND POSTS:

METAL STANDARDS AND FACES OF THE CONCRETE END POSTS FOR THE METAL RAIL SHALL BE SET NORMAL TO THE GRADE OF THE CURB, UNLESS OTHERWISE SHOWN ON PLANS. THE METAL RAIL AND TOPS OF CONCRETE POSTS USED WITH THE ALUMINUM RAIL SHALL BE BUILT PARALLEL TO THE GRADE OF THE CURB.

METAL HANDRAILS SHALL BE IN ACCORDANCE WITH THE PLANS. RAILS SHALL BE AS MANUFACTURED FOR BRIDGE RAILING. CASTINGS SHALL BE OF A UNIFORM APPEARANCE. FINS AND OTHER DEFORMATIONS RESULTING FROM CASTING OR OTHERWISE SHALL BE REMOVED IN A MANNER SO THAT A UNIFORM COLORING OF THE COMPLETED CASTING SHALL BE OBTAINED. CASTINGS WITH DISCOLORATIONS OR OF NON-UNIFORM COLORING WILL NOT BE ACCEPTED. CERTIFIED MILL REPORTS ARE REQUIRED FOR METAL RAILS AND POSTS.

## SPECIAL NOTES:

GENERALLY, IN CASE OF DISCREPANCY, THIS STANDARD SHEET OF NOTES SHALL GOVERN OVER THE SPECIFICATIONS, BUT THE REMAINDER OF THE PLANS SHALL GOVERN OVER NOTES HEREON, AND SPECIAL PROVISIONS SHALL GOVERN OVER ALL. SEE SPECIFICATIONS ARTICLE 105-4.

ENGLISH

JANUARY, 1990

STD. NO. SN