PROJ. REFERENCE NO.	SHEET NO.
I-5784	9

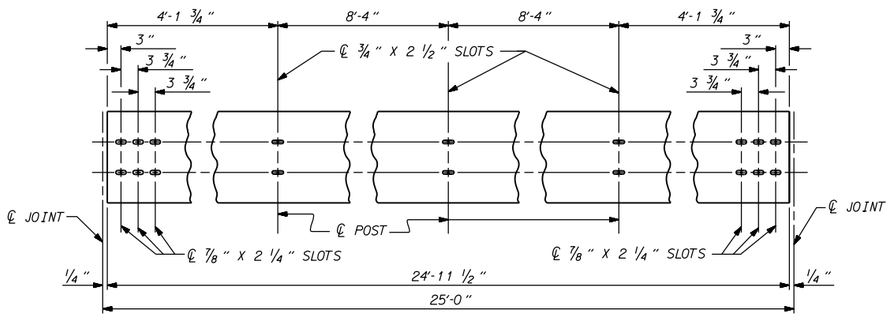

ELEVATION TUBULAR BEAM STANDARD RAIL

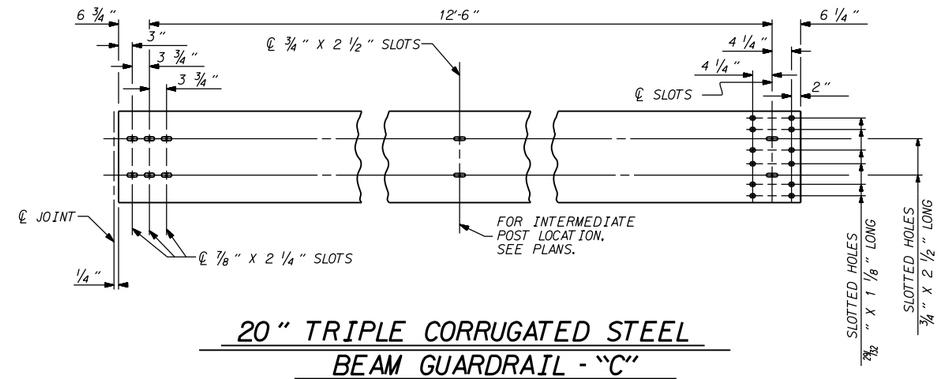

20" TRIPLE CORRUGATED STEEL BEAM GUARDRAIL - "C"

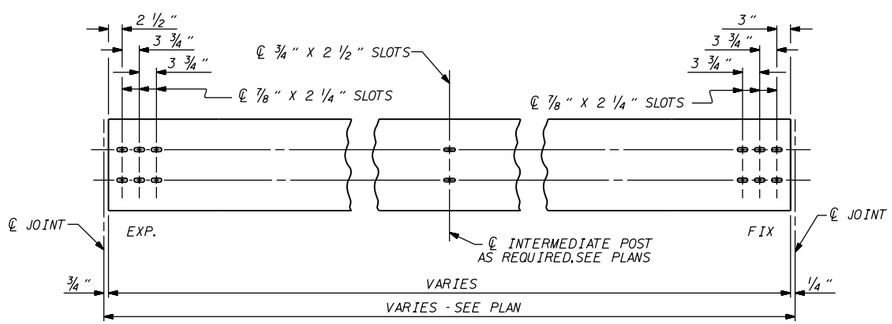

ELEVATION TUBULAR BEAM EXPANSION RAIL FOR TYPE 1 SPLICE

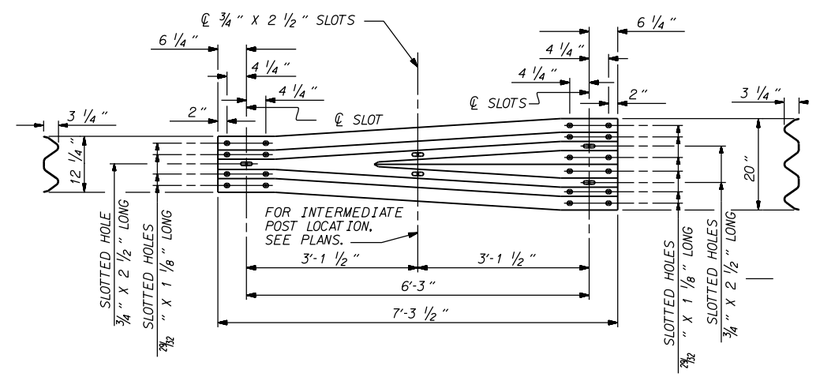

W-TR GUARDRAIL TRANSITIONAL SECTION

CONTRACT STANDARD AND DEVELOPMENT UNIT
Office 919-707-6950 FAX 919-250-4119

RETROFIT OF EXISTING BRIDGE RAIL WITH TUBULAR BEAM GUARDRAIL

ORIGINAL BY: C.O. CUEVAS DATE: 9-1-98
MODIFIED BY: DATE:
CHECKED BY: DATE:
FILE SPEC.: ds182:\usr\cesar\english\retrofit.dgn