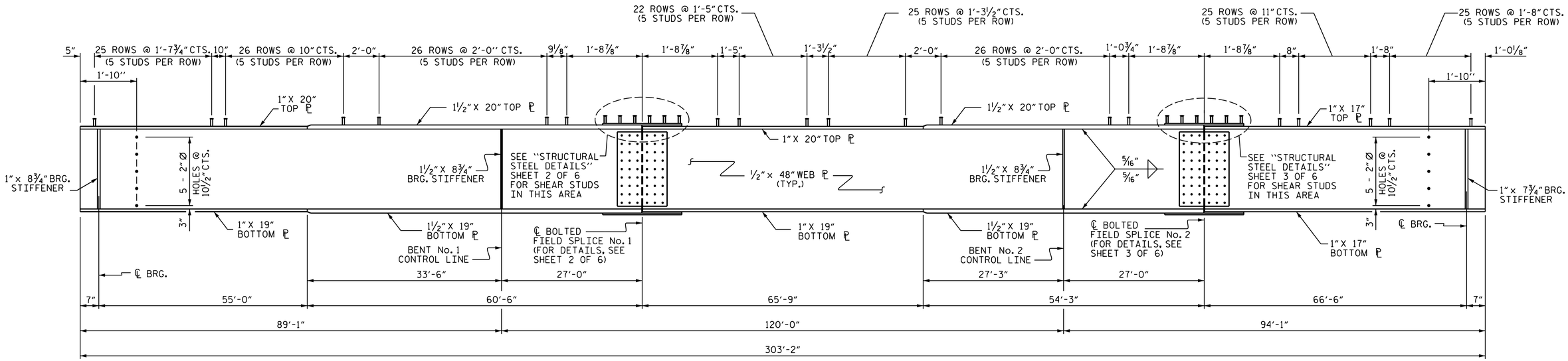

PLATE GIRDER ELEVATION

(DIAPHRAGM CONNECTOR PLATES AND DRIP BEADS NOT SHOWN)

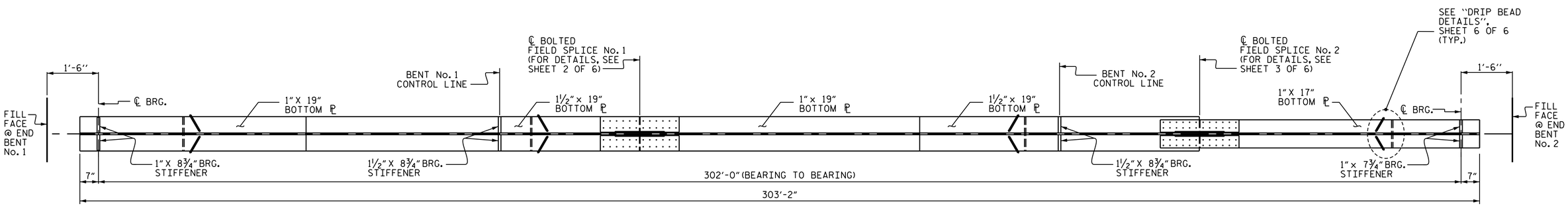

PLAN OF BOTTOM FLANGE

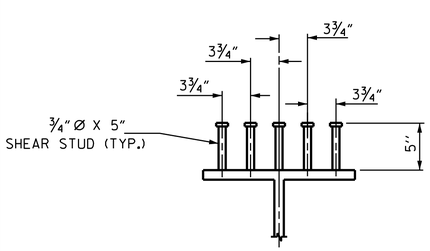

SHEAR STUD DETAILS

(FOR 20" TOP PL)

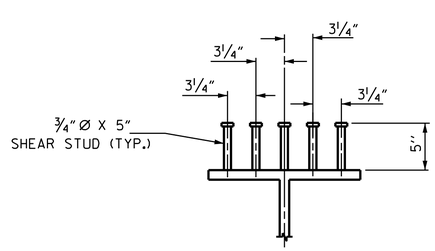

SHEAR STUD DETAILS

(FOR 17" TOP PL)

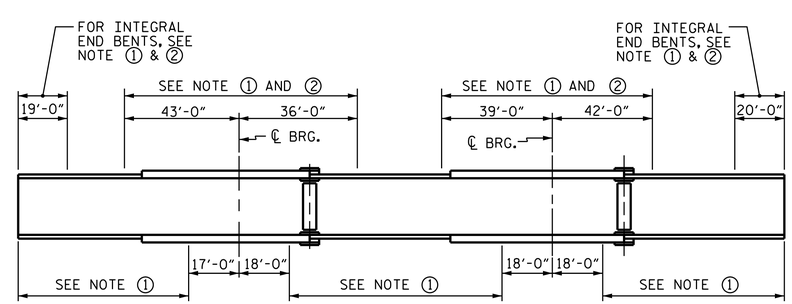

GIRDER MAKE UP

NOTE ①: CHARPY V-NOTCH TESTS ARE REQUIRED FOR ALL TOP OR BOTTOM FLANGE PLATES WHICH FALL WITHIN THESE LIMITS, ALL WEB PLATES, AND ALL SPLICE PLATES. IF A PERMITTED SHOP FLANGE SPLICE IS NOT USED, CHARPY V-NOTCH TESTS WILL BE REQUIRED FOR THE ENTIRE FLANGE PLATE. FOR CHARPY V-NOTCH TESTS, SEE ARTICLE 1072-7 OF THE STANDARD SPECIFICATIONS.

NOTE ②: NO WELDING OF FORMS OR FALSEWORK TO THE TOP FLANGE WILL BE PERMITTED IN THIS REGION.

CHARPY V-NOTCH TESTS FOR CONTINUOUS PLATE GIRDERS

NORTH CAROLINA PROFESSIONAL SEAL 20125 ENGINEER MARSHALL G. CHEEK, JR.

DocuSigned: Marshall G. Cheek, Jr.
65490BEBAA3B405...
9/11/2015

PROJECT NO. B-3868
MACON COUNTY
STATION: 18+33.50 -L-

SHEET 1 OF 6

STATE OF NORTH CAROLINA
DEPARTMENT OF TRANSPORTATION
RALEIGH

SUPERSTRUCTURE

STRUCTURAL STEEL DETAILS

REVISIONS							SHEET NO.
NO.	BY:	DATE:	NO.	BY:	DATE:		S-13
1			3				TOTAL SHEETS
2			4				40

DRAWN BY : D. HODGE DATE : 6/14
CHECKED BY : B.N. GRADY DATE : 6/15
DESIGN ENGINEER OF RECORD: S.T. CHAMPION DATE : 8/15