PROJECT REFERENCE NO.	SHEET NO.
W-5519	EC-29/CONST-5
R/W SHEET NO.	5

moffatt & nichol
1616 EAST MILLBROOK ROAD, SUITE 160
RALEIGH, NORTH CAROLINA 27609
(919) 781-4626 VOICE (919) 781-4869 FAX

NOTE:
SILT FENCE AND COIR FIBER WATTLE BREAKS SHALL BE INSTALLED AS DIRECTED BY ENGINEER.

-L-
PI Sta 128+52.74
△ = 10° 03' 32.5" (RT)
D = 1° 54' 35.5"
L = 526.69'
T = 264.02'
R = 3,000.00'

DETAIL B
SPECIAL LATERAL BASE DITCH
(Not to Scale)

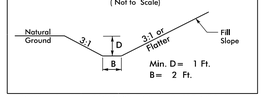

FROM -L- STA. 109+60 TO STA. 115+90 LT

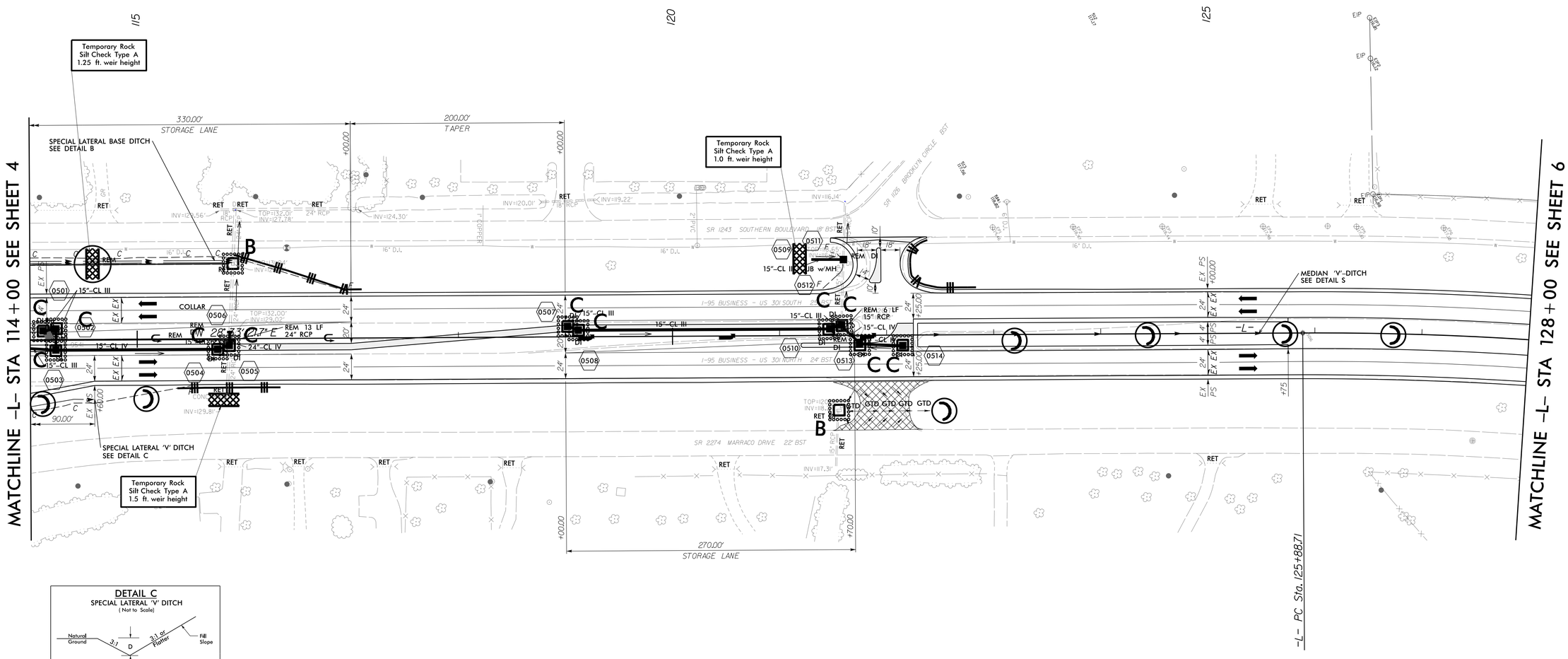

DETAIL C
SPECIAL LATERAL 'V' DITCH
(Not to Scale)

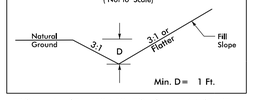

FROM -L- STA. 113+10 TO STA. 114+60 RT

INSTALL MATTING FOR EROSION CONTROL IN THE PROPOSED DITCH LINE.

For Slopes Excavated Greater Than 10 feet Install Matting for Erosion Control on Entire Slope as Work Allows.

8/17/99
9/14/2015
R:\Highway\Proj\Rds\W-5519_REU_PSH29_FINAL.dgn
jacobluser