DocuSign Envelope ID: C198128E-92AF-4591-AC82-55A12AF7AC0E

PROJECT REFERENCE NO.	SHEET NO.
C-5558	CRP-5.000

1. INSTALL COMPOSITE CCTV CABLE
2. INSTALL LOW VOLTAGE POWER CABLE (24VAC)
3. INSTALL CATEGORY 5E CABLE
4. INSTALL SMFO CABLE
5. NOT USED
6. INSTALL FIBER–OPTIC DROP CABLE
7. INSTALL TRACER WIRE
8. INSTALL CONDUIT UNDERGROUND
9. INSTALL PVC CONDUIT
10. INSTALL RIGID, GALVANIZED STEEL CONDUIT
11. INSTALL RIGID, GALVANIZED STEEL RISER WITH WEATHERHEAD
12. INSTALL RIGID, GALVANIZED STEEL RISER WITH HEAT SHRINK TUBING
13. INSTALL HEAT SHRINK TUBING RETROFIT KIT
14. INSTALL HIGH DENSITY POLYETHYLENE CONDUIT
15. DIRECTIONAL DRILL CONDUIT
16. BORE AND JACK CONDUIT
17. INSTALL CABLE(S) IN EXISTING CONDUIT
18. INSTALL CABLE(S) IN NEW CONDUIT
19. INSTALL CABLE(S) IN EXISTING RISER(S)
20. INSTALL CABLE(S) IN NEW RISER(S)
21. INSTALL CABLE(S) IN EXISTING CABINET ENTRANCE
22. INSTALL NEW CONDUIT INTO CABINET BASE (USE EXISTING CONDUIT STUBOUTS WHEN AVAILABLE)
23. INSTALL NEW RISER INTO CABINET BASE (USE EXISTING CONDUIT STUBOUTS WHEN AVAILABLE)
24. INSTALL NEW CONDUIT INTO POLE MOUNTED CABINET
25. INSTALL NEW RISER INTO POLE MOUNTED CABINET
26. INSTALL DIGITAL VIDEO ENCODER
27. INSTALL NEW ETHERNET EDGE SWITCH IN CABINET
28. INSTALL INTERCONNECT CENTER, PATCH PANEL, JUMPERS, AND FUSION SPLICE CABLE IN CABINET
29. INSTALL UNDERGROUND SPLICE ENCLOSURE
30. INSTALL AERIAL SPLICE ENCLOSURE
31. INSTALL SPLICE CABINET
32. MODIFY EXISTING SPLICE ENCLOSURE OR INTERCONNECT CENTER
33. REMOVE EXISTING SPLICE /HUB /CCTV CABINET
34. INSTALL CABINET FOUNDATION
35. REMOVE EXISTING CABINET FOUNDATION
36. INSTALL CCTV CAMERA ASSEMBLY
37. INSTALL CCTV WOOD POLE
38. INSTALL STANDARD SIZE JUNCTION BOX
39. INSTALL SPECIAL–SIZED JUNCTION BOX
40. INSTALL OVER–SIZED JUNCTION BOX
41. REMOVE EXISTING JUNCTION BOX
42. INSTALL WOOD POLE
43. REMOVE EXISTING WOOD POLE
44. INSTALL AERIAL GUY ASSEMBLY
45. INSTALL STANDARD GUY ASSEMBLY
46. INSTALL SIDEWALK GUY ASSEMBLY
47. INSTALL MESSENGER CABLE
48. REMOVE EXISTING COMMUNICATIONS CABLE AND MESSENGER CABLE
49. REMOVE EXISTING COMMUNICATIONS CABLE
50. INSTALL WIRELESS DSL
51. INSTALL CABLE STORAGE GUIDE(S) [SNOW SHOE(S)] AND STORE 100 FEET OF EACH CABLE
52. INSTALL DELINEATOR MARKER
53. STORE 50 FEET OF COMMUNICATIONS CABLE (EACH CABLE)
54. LASH CABLE(S) TO EXISTING SIGNAL/COMMUNICATIONS CABLE
55. LASH CABLE(S) TO EXISTING MESSENGER CABLE
56. LASH CABLE(S) TO NEW MESSENGER CABLE
57. MODIFY EXISTING ELECTRICAL SERVICE FOR CCTV
58. INSTALL NEW ELECTRICAL SERVICE FOR CCTV
59. INSTALL NEW POLE MOUNTED CCTV CABINET (336)
60. INSTALL NEW BUILDING MOUNTED CCTV CABINET (336)
61. REMOVE EXISTING CCTV CAMERA ASSEMBLY
62. NEW CABINET ENTRANCE INTO NEW FOUNDATION
63. DRILL/CORE DRILL EXISTING FOUNDATION
64. INTERCEPT AND REROUTE EXISTING CONDUITS
65. BOND MESSENGER TO POLE GROUND
66. BOND RISER TO POLE GROUND
67. BOND TRACER WIRE TO EQUIPMENT GROUND BUS
68. INSTALL NEW COVER ON OVER–SIZED JUNCTION BOX
69. INSTALL NEW BASE MOUNTED CCTV CABINET (336–A)
70. INSTALL NEW POLE MOUNTED CCTV CABINET (NEMA TYPE 4)
71. HANDLASH AND INSTALL AERIAL CABLE PROTECTOR

CONSTRUCTION NOTE SYMBOLOGY KEY

- (XX) INDICATES NUMBER OF CABLES, LOOPS, ETC.
- (XX) INDICATES NUMBER OF FIBERS PER CABLE, TWISTED PAIRS PER CABLE, ETC.
- <XX INDICATES NUMBER OF RISER(S)/CONDUIT(S)
- XX> INDICATES DIAMETER OF RISER(S)/CONDUIT(S) (INCH)

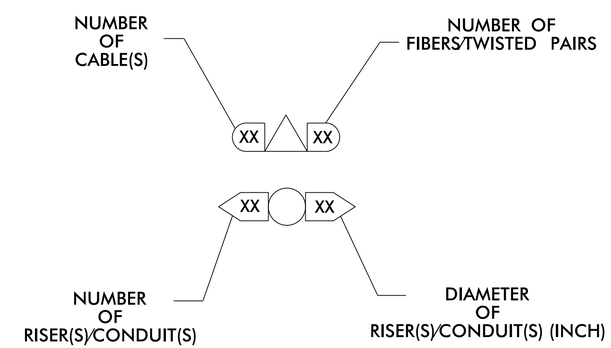

ATTACHMENT POINT:

- XXX / YYY — DISTANCE ABOVE (IN) / REFERENCE POINT
- YYY / XXX — REFERENCE POINT / DISTANCE BELOW (IN)

ATKINS 1616 EAST MILLBROOK ROAD, SUITE 310
RALEIGH, NORTH CAROLINA 27609
(919) 876-6888 NCBEES #F-0326

Prepared for the Offices of: Transportation Mobility and Safety Division — Intelligent Transportation Systems Section — State of North Carolina Department of Transportation
750 Greenfield Parkway, Garner, NC 27529

NTS

High Point Signal System Construction Notes

Division 7 Guilford County High Point

PLAN DATE:	June 2015	REVIEWED BY:	MB Toth
PREPARED BY:	IW BERDEAU	REVIEWED BY:	LW Moon

REVISIONS	INIT.	DATE

SEAL: NORTH CAROLINA PROFESSIONAL SEAL 025892 ENGINEER MELISSA B. TOTH

DocuSigned by: Melissa B. Toth 6/5/2015
C9B0CB6E4D0A4AF... DATE

CADD Filename: CRP-5.000.dgn

05-JUN-2015 09:37
D:\Transportation\Traffic\Curr\100037777 - High Point Sig Sys\Special Details\Volume 1\CRP-5.000.dgn
WILE2054 A: 0026901\0